THIS DRAWING IS UNPUBLISHED. RELEASED FOR PUBLICATION 20
© COPYRIGHT 20 y ALL RIGHTS RESERVED.

LOC	DIST
IR	-

REVISIONS

P	LTR	DESCRIPTION	DATE	DWN	APVD
	AV4	REVISED PER ECR-15-007886	17JUN2015	NK	GH

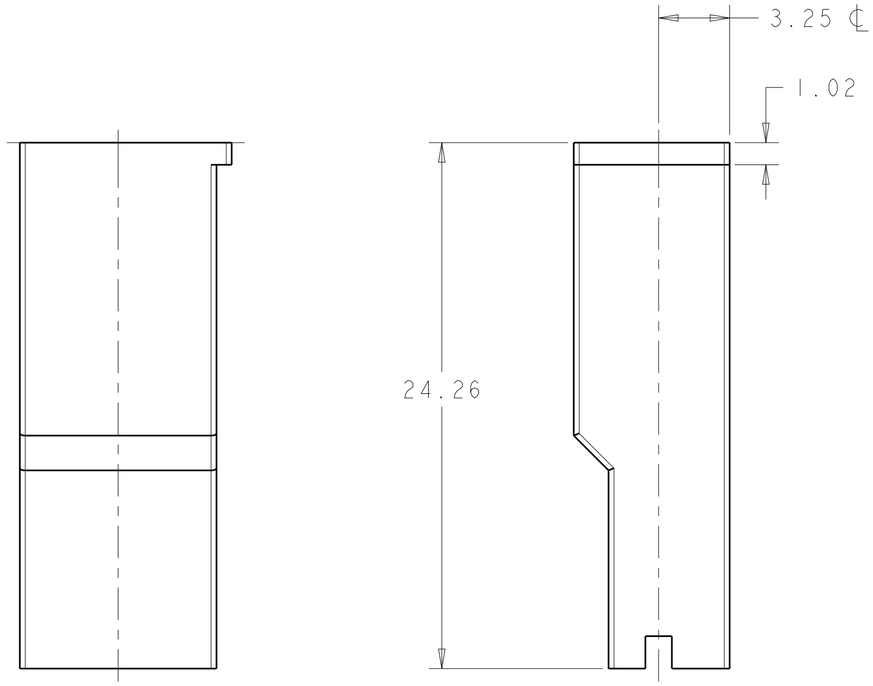

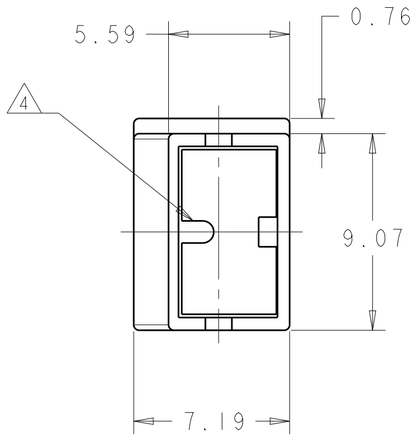

NOTES:

1. PA66 NATURAL MATERIAL ACC TO SPEC IEC 60335-1 GWT 750° WITHOUT FLAME
2. MOISTURISED PRODUCT FOR SMALL WIRE APPLICATIONS
3. ONLY FOR USE WITH POST PLATED OR WASHED CONTACTS
4. RIB MAY EXTEND TO FRONT OF HOUSING
5. USING EQUIVALENT ALTERNATE MATERIAL

Notes	Part Number	Part Revision	Flammability Rating	Material	Colour
OBSOLETE	2	~~8-154719-6~~	As Drg	UL 94 V0	PA 66	Orange
	2	8-154719-5	As Drg	UL 94 V2	PA 6/6 or Equivalent	Natural
OBSOLETE	1	~~8-154719-4~~	As Drg	UL 94 V0	PA 66	Natural
		8-154719-3	As Drg.	UL 94 V0	PA 66/6	Terracotta
OBSOLETE	2	~~8-154719-1~~	As Drg.	UL 94 V2	PA 6/6 or Equivalent	Black
		8-154719-0	As drg.	UL 94 V0	PA 6/6 or Equivalent	Clear
		7-154719-0	AE	UL 94 V0	PA 66	Orange (Ral 2000)
		6-154719-6	AB	UL 94 V2	PBT	Black
		5-154719-0	AB	UL 94 V0	PPE+PS	Orange
		4-154719-0	AA	UL 94 V0	PA 66	(Bk-59 Black)
	3	2-154719-0	AA	UL 94 V0	PPE+PS	Red
	5	1-154719-1	As Drg.	UL 94 V0	PA 6/6 or Equivalent	Natural
		1-154719-0	AE	UL 94 V0	PA 6/6 or Equivalent	Natural
		154719-9	As Drg.	UL 94 V2	PA 6/6 or Equivalent	Brown
		154719-6	As Drg.	UL 94 V2	PA 6/6 or Equivalent	Blue
		154719-5	As Drg.	UL 94 V2	PA 6/6 or Equivalent	Green
		154719-4	As Drg.	UL 94 V2	PA 6/6 or Equivalent	Yellow
		154719-2	As Drg.	UL 94 V2	PA 6/6 or Equivalent	Red
		154719-1	As Drg.	UL 94 V2	PA 6/6 or Equivalent	Natural
		154719	As. Drg.	UL 94 V2	PA 6/6 or Equivalent	Black

THIS DRAWING IS A CONTROLLED DOCUMENT.

DIMENSIONS: mm

TOLERANCES UNLESS OTHERWISE SPECIFIED:
LINEAR ±0.5
~~0 PLC ±0.1~~
~~1 PLC ±0.1~~
~~2 PLC ±0.05~~
~~3 PLC ±~~
~~4 PLC ±~~
ANGLES ±2°
FINISH -

MATERIAL: See Table

DWN A.J.BEKEN 09MAY2002
CHK S.CLAPPISON 09MAY2002
APVD S.CLAPPISON 09MAY2002
PRODUCT SPEC 108-3252
APPLICATION SPEC 114-2153
WEIGHT 0.5g

TE Connectivity

NAME: POSITIVE LOCK RECEPTACLE INSULATOR -

SIZE	CAGE CODE	DRAWING NO	RESTRICTED TO
A2	00779	C-154719	-

Customer Drawing | SCALE 5:1 | SHEET 1 OF 1 | REV AV4

1471-9 (3/11)