RoHS COMPLIANT

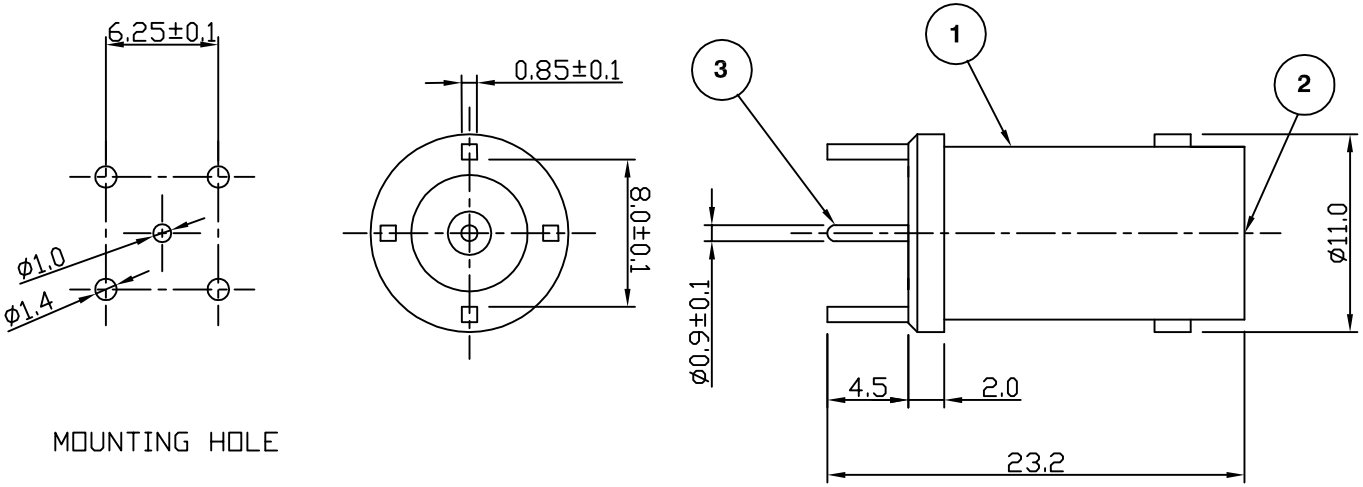

Electrical Characteristics

Nominal Impedance:	75 ohms
Frequency Range:	DC to 1 GHz
VSWR:	1.3:1 maximum
Insertion Loss:	0.2 dB at 1 GHz
Operating Voltage (rms):	500 V maximum at sea level
Dielectric Withstand Voltage (rms):	1500 V maximum at sea level
Contact Resistance:	3.0 milliohms maximum
Insulation Resistance:	5000 megohms minimum

Mechanical Characteristics

Mating Cycles:	500 cycles minimum
Interface Dimensions:	Conform to MIL-C-39012

Environmental Characteristics

Temperature Range:	-65 °C to +165 °C

	PART	DESCRIPTION
1	Body	Brass, tin plated
2	Dielectric	PTFE
3	Contact	Brass, gold plated

DESCRIPTION OF REVISION	APPVD	ISS	DATE
Address & RoHS added	MS	4	11 Sep 09
Mounting Hole From Ø1.2 To Ø1.4	SN	3	18 Feb 02
CAD Issue	SN	2	04 Feb 02
First Issue	DW	1	21 July 99

EMERSON Network Power

Connectivity Solutions
7-13 Russel Way,
Widford Industrial Estate,
Chelmsford,Essex,
CM1 3AA, UK.
Tel: +44 (0) 1245 359515
Fax: +44 (0) 1245 358938

SCALE: Not To Scale
DIMENSIONS: mm
TOLERANCES: ± 0.2mm unless otherwise stated

DRAWN BY:	S Nash
CHECKED BY:	S Nash
APPROVED BY:	M Nielsen
DATE:	04 Feb 02

TITLE:
BNC Vertical PCB Mount Jack

PART NUMBER:
VB335-75

PAGE: 1 of 1

COPYRIGHT © 2002 VITELEC ELECTRONICS LIMITED

THIS DRAWING MAY NOT BE REPRODUCED IN WHOLE OR IN PART WITHOUT OUR WRITTEN PERMISSION