THIS DRAWING IS UNPUBLISHED. RELEASED FOR PUBLICATION -,- .
© COPYRIGHT - BY TYCO ELECTRONICS CORPORATION. ALL RIGHTS RESERVED.

| LOC | DIST |
|---|---|
| AG | 53 |

REVISIONS

| P | LTR | DESCRIPTION | DATE | DWN | APVD |
|---|---|---|---|---|---|
| | A | REVISED PER ECO-06-001742 | 31JAN06 | JDP | JGH |

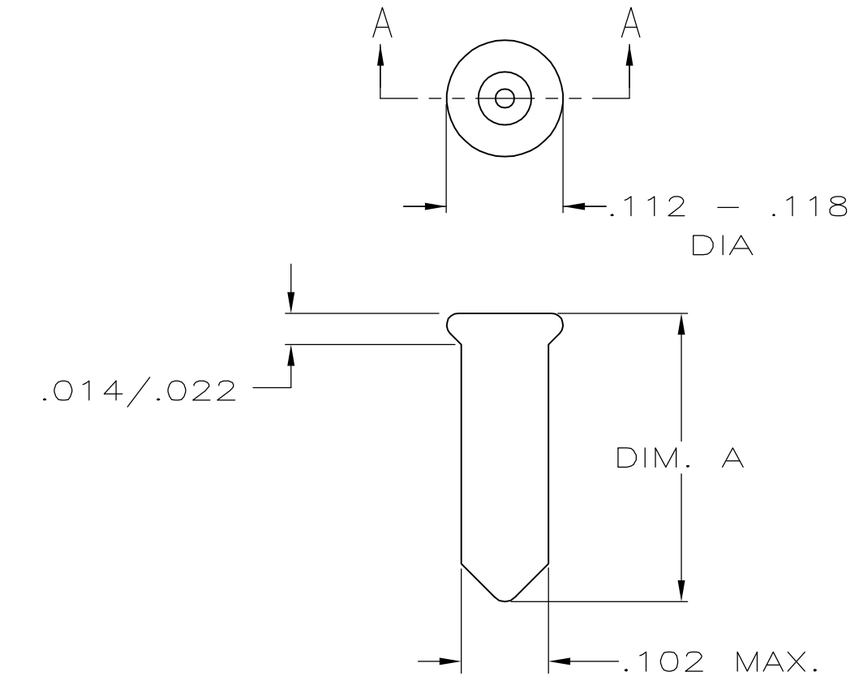


1. MATERIAL:
   EYELET: COPPER PER ASTM B 152
   SPRING: BERYLLIUM COPPER PER ASTM B 194

2. TIN PLATE PER ASTM B 545 .000100 MIN THICK.

3. GOLD PLATE PER ASTM B 488 .000030 MIN THICK OVER NICKEL PLATE PER QQ-N-290ON CONTACT AREA.

4. TO INSURE 1/2 OZ MIN RETENTION DO NOT EXCEED .004 DIFFERENCE IN PIN DIA WHEN CHANGING TO A SMALLER DIA PIN.

5. HOLE SIZE FOR HAND INSERTION .105±.002.

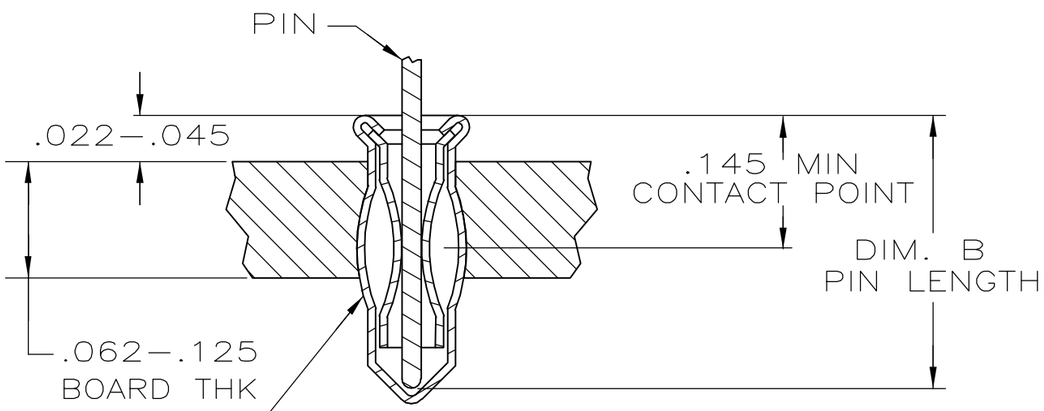


MSS INSERTION MACHINE CAPABLE OF OVALIZING SOCKET FOR RETENTION IN PC BOARD WITH .104±.003 DIA HOLE PRIOR TO SOLDERING OPERATION

SECTION A–A

| DIM. B | DIM. A | DIA 4 | SPRING | EYELET | PART NO |
|---|---|---|---|---|---|
| .275 MAX | .308±.008 | .042/.049 | GOLD 3 / TIN 2 | TIN 2 | 5645980-2 / 5645980-1 |
| PIN | | | FINISH | | |

THIS DRAWING IS A CONTROLLED DOCUMENT.

DIMENSIONS: INCHES

TOLERANCES UNLESS OTHERWISE SPECIFIED:
0 PLC ± –
1 PLC ± –
2 PLC ± –
3 PLC ± –
4 PLC ± –
ANGLES ± –

MATERIAL: NOTE 1

FINISH: SEE TABLE

DWN L. VARELA – DOCK5 19APR2005
CHK J. HAVENER 19APR2005
APVD J. HAVENER 19APR2005
PRODUCT SPEC 108-14008
APPLICATION SPEC 114-13152
WEIGHT –

CUSTOMER DRAWING

tyco Electronics
Tyco Electronics Corporation
Harrisburg, PA 17105-3608

NAME: MINIATURE SPRING SOCKET ASSEMBLY –

| SIZE | CAGE CODE | DRAWING NO | RESTRICTED TO |
|---|---|---|---|
| A3 | 00779 | C-5645980 | – |

SCALE NTS | SHEET 1 OF 1 | REV A