THIS DRAWING IS UNPUBLISHED. RELEASED FOR PUBLICATION OCT ,1988.
© COPYRIGHT 1988 By – ALL RIGHTS RESERVED.

LOC	DIST
J	–

REVISIONS

P	LTR	DESCRIPTION	DATE	DWN	APVD
	P	REVISED PER ECO-11-005033	31MAR11	RK	HMR

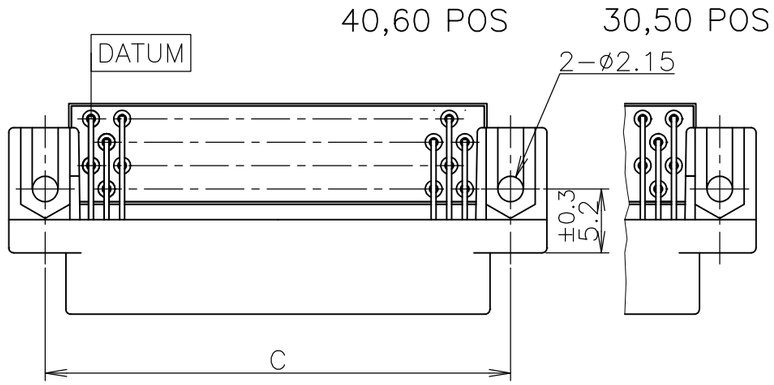

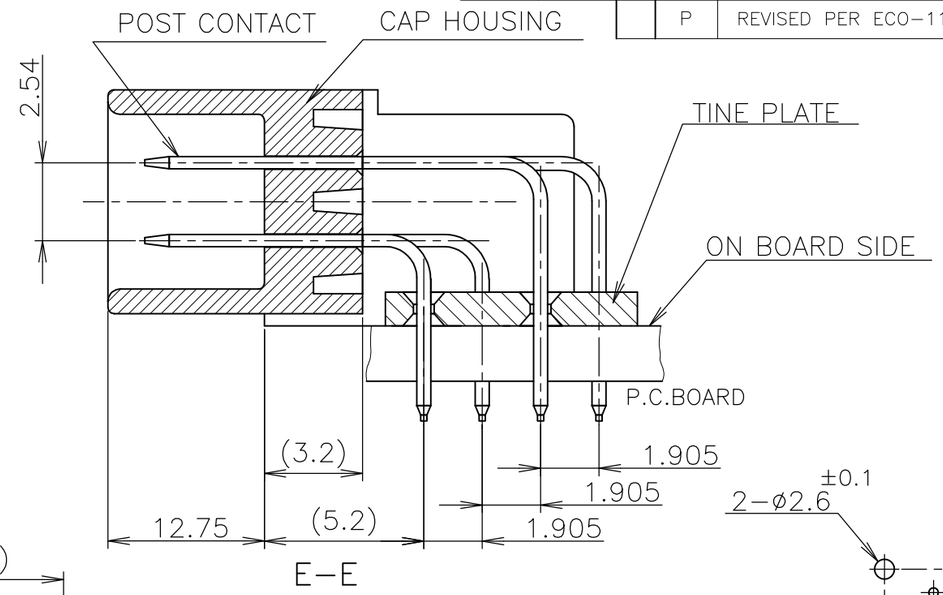

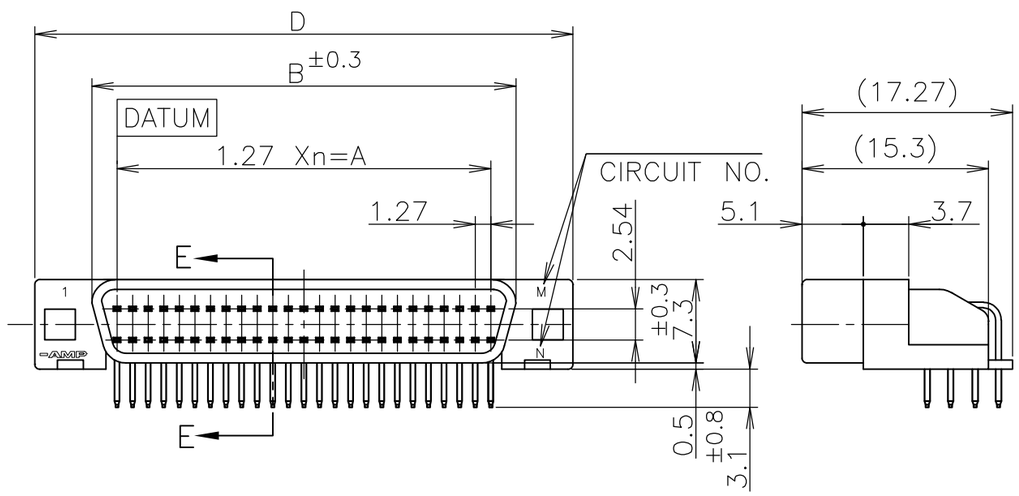

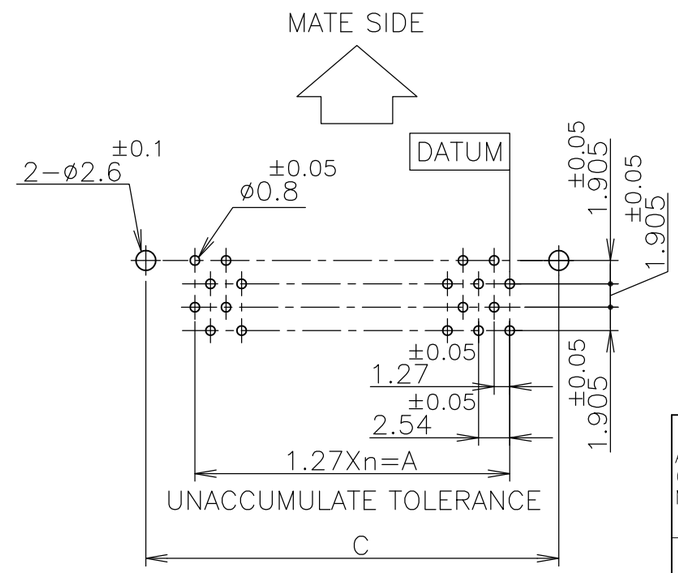

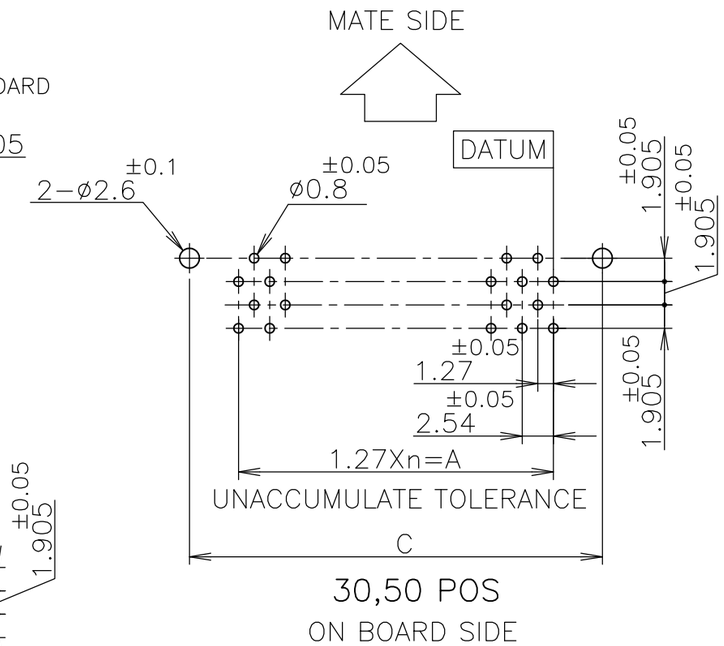

1 USE A P.C.B. WHOSE ARE TREATED WITH SOLDER RESIST.
2 SHOW P.C.B LAYOUT FROM ON BOARD SURFACE SIDE.
3 NUMBER THE CONTACT IN THE P.C.B OR CONNECTOR CONSECUTIVELY FROM "DATUM" SIDE.
4 APPLY M2 SCREW & NUT TO FIX OF CONNECTOR.
5 HOUSING MATERIAL : P.B.T(UL94V-0) / BLACK
6 CONTACT MATERIAL : PHOS-BRONZE
7 FINISH : NICKEL 0.00127 MIN THK. OVERALL SELECTIVE GOLD 0.00076 MIN. OR 0.0002 MIN. THK ON CONTACT AREA AND TIN 0.001 MIN THK. ON TINE AREA.
8 OBSOLETE PARTS: OBSOLETE CIS STREAMLINING PER D.RENAUD/D.SINISI

REMARK	PART NUMBER	POS	n	A	B	C	D
Au PL. 0.00076 MIN.	6-1 -4	60	29	36.83	42.80	44.23	50.23
	~~8 6- -3~~	~~50~~	~~24~~	~~30.48~~	~~36.45~~	~~37.88~~	~~43.88~~
	~~8 6- -2~~	~~40~~	~~19~~	~~24.13~~	~~30.10~~	~~31.53~~	~~37.53~~
	~~8 6- -1~~	~~30~~	~~14~~	~~17.78~~	~~23.75~~	~~25.18~~	~~31.18~~
Au PL. 0.0002 MIN.	-4	60	29	36.83	42.80	44.23	50.23
	-3	50	24	30.48	36.45	37.88	43.88
	-2	40	19	24.13	30.10	31.53	37.53
	5173278-1	30	14	17.78	23.75	25.18	31.18

LEAD FREE

GENERAL TOLERANCE
10 ≧ : ±0.2
30≧ > 10: ±0.25
100 ≧ > 30: ±0.3
ANGLES:±3°

THIS DRAWING IS A CONTROLLED DOCUMENT.

DIMENSIONS: mm

TOLERANCES UNLESS OTHERWISE SPECIFIED:
0 PLC ±–
1 PLC ±–
2 PLC ±–
3 PLC ±–
4 PLC ±–
ANGLES ±–

MATERIAL: SEE NOTE 5 6
FINISH: SEE NOTE 7

DWN	COREL.WANG	18AUG04
CHK	STEVEN YAO	18AUG04
APVD	I.ENOMOTO	18AUG04
PRODUCT SPEC	108-60036	
APPLICATION SPEC		
WEIGHT		

TE Connectivity

NAME: CAP ASSY (HORIZONTAL / W/O LEG) AMPLIMITE .050 SERIES I B-TO-B CONN. –

SIZE	CAGE CODE	DRAWING NO	RESTRICTED TO
A3	00779	C-5173278	–

CUSTOMER DRAWING | SCALE NTS | SHEET 1 OF 1 | REV P

1470-19 (3/11)