3M™ Through-Board Socket

2 mm x 2 mm Straight, Dual Entry, Surface Mount — 953 Series

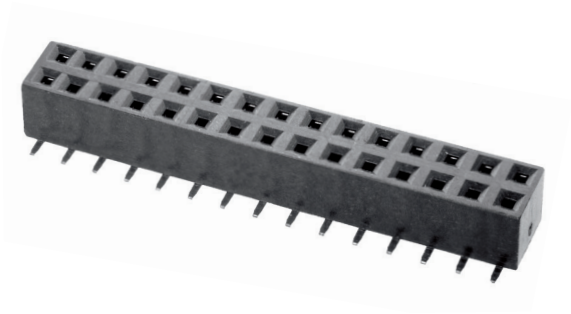

- Optimizes use of PC board space
- High temperature dielectric
- "No lead" reflow solder compatible
- Dual row design, 6–60 pins
- Minimized PC Board stacking heights
- Mates with pin headers for board stacking applications
- RoHS Compliant. See the Regulatory Information Appendix (RIA) in the RoHS compliance section of www.3Mconnectors.com for compliance information (RIA E1 & C1 apply)

Date Modified: November 26, 2012

TS-2165-F
Sheet 1 of 2

Physical

Insulation	
Material:	High Temperature Thermoplastic
Flammability:	UL 94V-0
Color:	Black
Contact	
Material:	Copper Alloy
Plating	
Underplating:	1.25–2.5 µm [50-100 µ"] Nickel
Wiping Area:	Flash Gold
Solder Tail Area:	1–3 µm [40–118 µ"] Matte Tin

Electrical

Current Rating:	1 A
Insulation Resistance:	> 5 x 10^8 Ohm at 100 V_{DC}
Withstanding Voltage:	1000 V_{DC}
Transition Resistance:	≤ 20 mOhm

Environmental

Temperature Range:	-40 °C to +105 °C
Processing Temperature:	max. 260 °C (Profile per J-STD-020C)
Moisture Sensitivity Level:	1 (per J-STD-020C)

UL File No.: E68080

3M is a trademark of the 3M Company
For technical, sales or ordering information
call your Local 3M Service Center

3M™ Through-Board Socket

2 mm x 2 mm Straight, Dual Entry, Surface Mount

953 Series

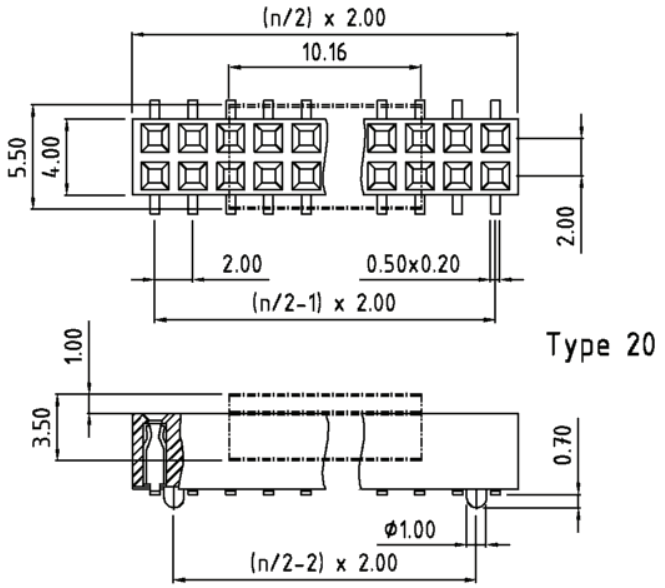

PCB-Layout

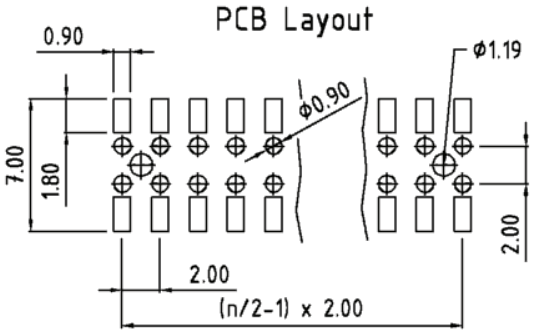

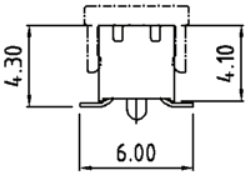

Tape & Reel Option						
Contact Quantity	10–14	16–18	20–30	32–44	46–58	60
Tape Width [mm]	24	32	44	56	72	88

n = No. of Contacts

Tolerance Unless Noted [mm]				
Nominal Size	0.5–3	3–6	6–30	30–120
Linear Dim	+/- 0.1	+/- 0.1	+/- 0.2	+/- 0.3
Radii	+/- 0.2	+/- 0.5	+/- 1	+/- 1

Ordering Information

9532XX - 20X0 - AR - XX (RIA E1 & C1 Apply)

Contact Quantity:
06–60 Pins

Tail Style:
2 = Straight,
Surface Mount

Board Location Features:
0 = none
2 = with Loc. Posts
(8–16 Contacts)

Packaging:
TP = Tube
PT = Tube with Pad 10 to 60 pos
PR = Tape & Reel with Pad 10 to 60 pos

see packaging option

TS-2165-F
Sheet 2 of 2

Important Notice

All statements, technical information, and recommendations related to 3M's products are based on information believed to be reliable, but the accuracy or completeness is not guaranteed. Before using this product, you must evaluate it and determine if it is suitable for your intended application. You assume all risks and liability associated with such use. Any statements related to the product which are not contained in 3M's current publications, or any contrary statements contained on your purchase order shall have no force or effect unless expressly agreed upon, in writing, by an authorized officer of 3M.

Warranty; Limited Remedy; Limited Liability.

This product will be free from defects in material and manufacture for a period of ninety (90) days from the time of purchase. **3M MAKES NO OTHER WARRANTIES INCLUDING, BUT NOT LIMITED TO, ANY IMPLIED WARRANTY OF MERCHANTABILITY OR FITNESS FOR A PARTICULAR PURPOSE.** If this product is defective within the warranty period stated above, your exclusive remedy shall be, at 3M's option, to replace or repair the 3M product or refund the purchase price of the 3M product. **Except where prohibited by law, 3M will not be liable for any indirect, special, incidental or consequential loss or damage arising from this 3M product, regardless of the legal theory asserted.**

3M Electronics Solutions Division
6801 River Place Blvd.
Austin, TX 78726-9000
U.S.A.
1-800-225-5373
www.3Mconnectors.com

Please recycle. Printed in USA.
© 3M 2012. All rights reserved.
RIA-2217B-E

3M is a trademark of 3M Company.