DRAWING MADE IN THIRD ANGLE PROJECTION
THIS DRAWING IS UNPUBLISHED. RELEASED FOR PUBLICATION ,19 .
© COPYRIGHT 19 BY AMP INCORPORATED. ALL INTERNATIONAL RIGHTS RESERVED.

LOC	DIST	P	F
G	14		

REVISIONS

ZONE	LTR	DESCRIPTION	DATE	APPD
	A	REVISED PER 0720-0230-93	2/28/94	DAP

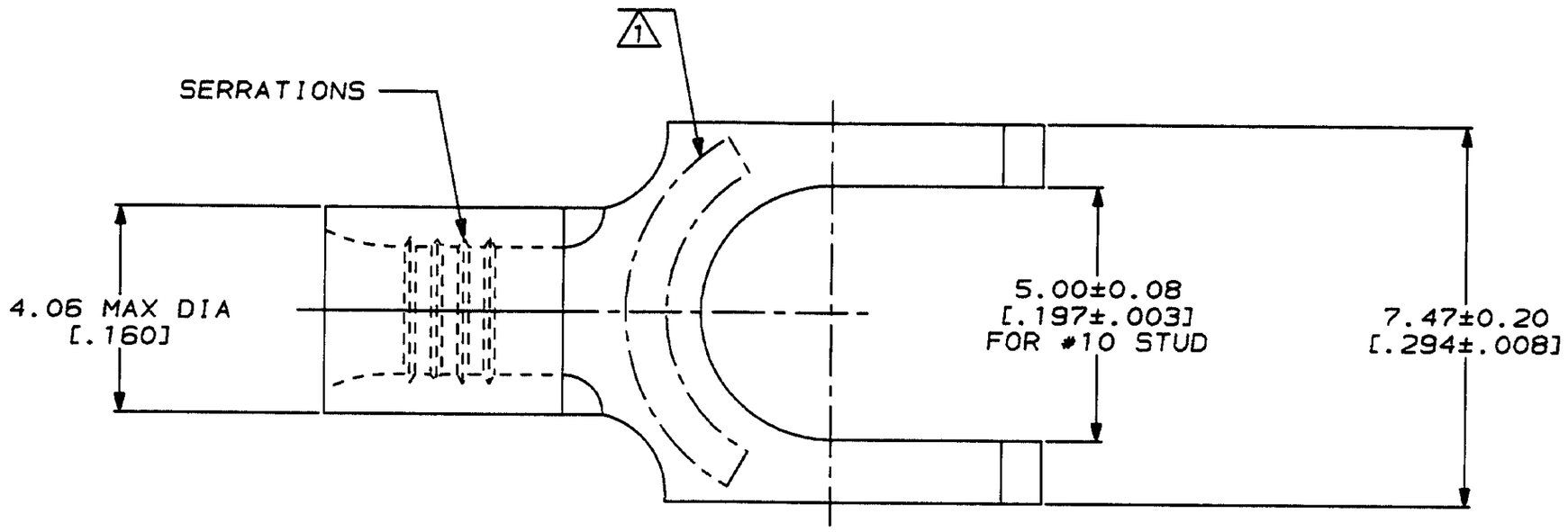

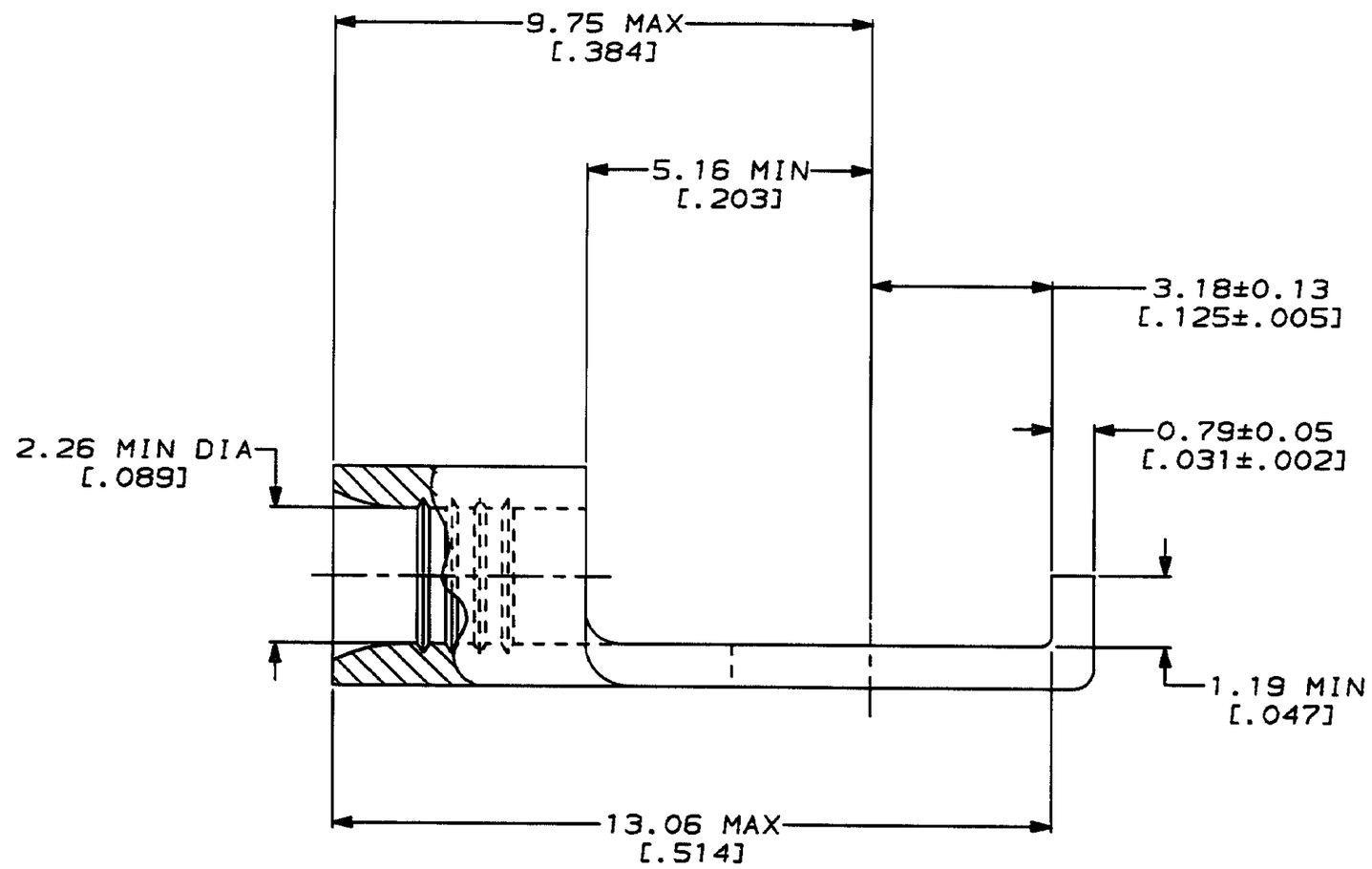

METRIC

DIMENSIONS LISTED IN mm [INCHES]

AMP WIRE RANGE	UL E13288 Listed
16-14 AWG STRANDED	16-14 AWG STRANDED
CSA LR7189 Certified	MILITARY P/N AND CLASS
NOT CERTIFIED	NOT APPLICABLE

1 STAMP AMP 16-14* APPROX AS SHOWN

320854

AMP INCORPORATED CUSTOMER SERVICE SYSTEMS	
FOR ADDITIONAL PRODUCT INFORMATION OR COPIES OF DRAWINGS AND TECHNICAL DOCUMENTS	PRODUCT INFORMATION CENTER 1-800-522-6752
FOR APPLICATION TOOLING INFORMATION	TOOLING ASSISTANCE CENTER 1-800-722-1111
FOR ORDER ENTRY	1-800-526-5142

MAX RECOMMENDED OPERATING TEMPERATURE: 170°C MAX

VOLTAGE RATING: NOT APPLICABLE

WIRE CROSS SECTIONAL AREA RANGE: 1.04-2.62mm² [2,050-5,180] CIR MILS STRANDED

THIS DRAWING IS A CONTROLLED DOCUMENT FOR AMP INCORPORATED. IT IS SUBJECT TO CHANGE AND THE CONTROLLING ENGINEERING ORGANIZATION SHOULD BE CONTACTED FOR THE LATEST REVISION.

DO NOT SCALE PRINT. UNLESS SPECIFIED ~~DIMENSIONS IN mm [INCHES]~~ TOLERANCES ON : 2 PLC DEC ± - 3 PLC DEC ± - ANGLES ± -

MATERIAL: COPPER PER ASTM B-152 ANNEALED

FINISH: TIN PLATE 0.00254[.000100] MIN THK PER MIL-T-10727

DR 3-3-93 TA BRINKMAN
CHK 3-3-93 DA PATTERSON
APPD 3-3-93 DE MILLER
APPD 3-3-93 JL MECKLEY
PRODUCT SPEC -
APPLICATION SPEC -
WEIGHT -

AMP Incorporated Harrisburg, PA 17105-3608

NAME: TERMINAL, FLANGED SPADE, BUDGET

SIZE	CAGE CODE	DRAWING NO
C	00779	C-320854

SCALE 10:1 SHEET 1 OF 1

CUSTOMER DRAWING

AMP 1471-6 REV 3-92

28-FEB-94 10:57:47 amp26463 /files/dept1123/dwg1123/u.bodies/u.16-14