THIS DRAWING IS UNPUBLISHED. RELEASED FOR PUBLICATION -.- .
© COPYRIGHT - BY TYCO ELECTRONICS CORPORATION. ALL RIGHTS RESERVED.

LOC	DIST
AD	00

REVISIONS

P	LTR	DESCRIPTION	DATE	DWN	APVD
	C	ECO-07-00908	02JUL07	MB	MS
	C1	REVISED PER ECO-09-024606	27OCT09	KK	AEG

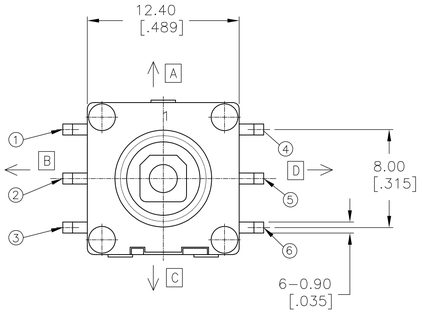

CIRCUIT DIAGRAM

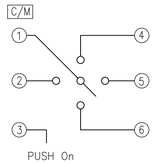

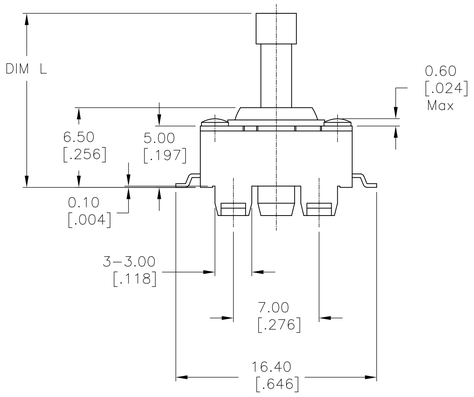

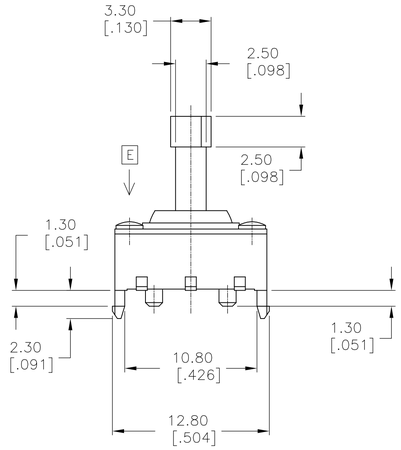

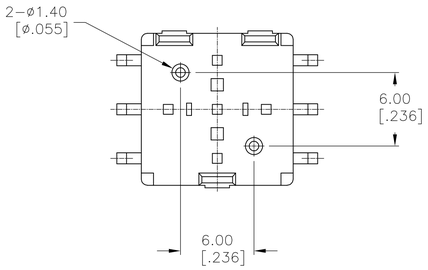

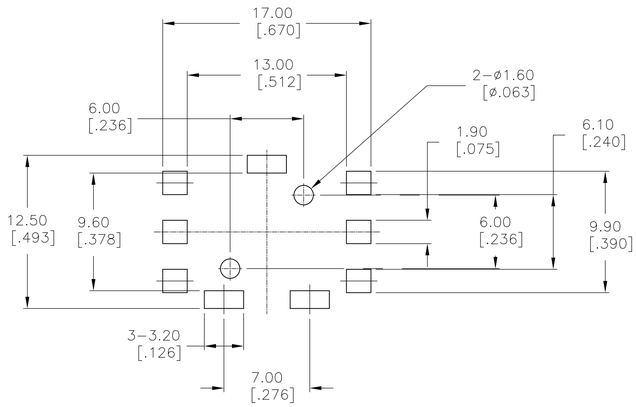

P.C.B SOLDER LAND DIMENSION

SPECIFICATIONS:
MATERIALS:
ACTUATOR, NYLON
CASE, NYLON
SPRING, STAINLESS STEEL COIL
CONTACT, COPPER ALLOY, PLATING-SILVER
TERMINAL, COPPER ALLOY, PLATING-SILVER/NICKEL
COVER, STEEL, TIN PLATE

ELECTRICAL:
MAX CONTACT RATING: 50MILLIAMPS@24V DC
MIN CONTACT RATING: 10MICROAMPS@1V DC
INITIAL CONTACT RESISTANCE, 100 MILLIOHMS MAX, PER EIA-364-23B, EACH POSITION
INSULATION RESISTANCE, 100 MEGOHM MIN. PER EIA-364-21C EACH POSITION
DIELECTRIC STRENGTH, 100 V AC FOR 1 MINUTE, PER EIA-364-20B, CONDITION 1, EACH POSITION.

MECHANICAL:
ACTUATION FORCE, 500 +/-150GF (CENTER PUSH), 200 +/-100GF (4-DIRECTIONAL)
ACTUATION TRAVEL, 1.0 +/-.3 MM (CENTER PUSH), 8 +/- 2 DEGREES (4-DIRECTIONAL)
LIFE EXPECTANCY, (CENTER PUSH), 50,000 CYCLES MIN (60-100 CYCLES PER MINUTE), (4-DIRECTIONAL) 50,000 CYCLES MIN. (15-20 CYCLES PER MINUTE), PER EIA-448 METHODS 8 AND 9
VIBRATION, PER EIA 364-28D, CONDITION VII, LEVEL E
MECHANICAL SHOCK, PER EIA-364-27C, CONDITION A

ENVIRONMENTAL:
OPERATING TEMPERATURE, -35 TO +85 DEGREES C
STORAGE TEMPERATURE, -35 TO +85 DEGREES C
HUMIDITY AND TEMPERATURE CYCLING PER EIA-364-31B, METHOD III
THERMAL SHOCK, PER EIA-364-32C, -35 TO +85 DEGREES C
SOLDERABILITY, PER EIA-364-52, CLASS 2, CATEGORY 1, TEMP, 245 DEGREES C MAX, TIME, 2.5 SECONDS MAX, 95% MINIMUM COVERAGE
RESISTANCE TO SOLDER HEAT, PER 109-201 COND B

1. ALL MATERIALS AND FINISHES SHALL COMPLY WITH EU DIRECTIVE 2002/95/EC OF 27JAN2003 (ROHS)

2 OBSOLETE PARTS: OBSOLETE CIS STREAMLINING PER D.RENAUD/D.SINISI

	ACTUATOR COLOR	DIM L	PART NUMBER
	BLACK	10.5	1571514-3
2 OBSOLETE	GRAY	12.2	1571514-2
	BLACK	14.2	1571514-1

THIS DRAWING IS A CONTROLLED DOCUMENT.

DIMENSIONS: mm [INCHES]

TOLERANCES UNLESS OTHERWISE SPECIFIED:
0 PLC ± -
1 PLC ± -
2 PLC ± 0.30
3 PLC ± -
4 PLC ± -
ANGLES ± 1°

MATERIAL: SEE NOTES
FINISH: -

DWN R BROWN 10APR03
CHK M SARVER 08APR03
APVD M SARVER 08APR03
PRODUCT SPEC —
APPLICATION SPEC —
WEIGHT —

Tyco Electronics
Tyco Electronics Corporation
Harrisburg, Pa 17105-3608

NAME: Pushbutton Switch, Multi-Directional Actuation, SMT
—
—

SIZE	CAGE CODE	DRAWING NO	RESTRICTED TO
A1	00779	C-1571514	—

CUSTOMER DRAWING | SCALE 4:1 | SHEET 1 OF 1 | REV C1