REV	ECN NO	REVISIONS	DRN	CKD	APP	DATE
A	—	NEW RELEASE	TWC	MES	N.O.	8-5-05
B	—	ADDED P/N 553-0181F	SM	N.O.	MES	11-13-06
C	—	CHANGED IN SIDE VIEW POS 3 TO POS 2	SM	N.O.	MES	11-17-06
D	—	ADDED P/N 553-0199F & NOTE 4	SM	N.O.	MES	5-1-07
E	—	OPERATING CHARACTERISTICS TABLE CORRECTED FOR WHITE LED	SM	N.O.	MES	5-22-07
F	—	UPDATED WHITE LED SPECS	KLJ	M.E.		2-7-08

ASSY. NO. (CAT. NO.)	LED COLOR POSITION 1	LED COLOR POSITION 2	NOTES
553-0101F	BLANK	RED	
553-0102F	BLANK	GREEN	
553-0103F	BLANK	YELLOW	
553-0107F	BLANK	ORANGE	
553-0108F	BLANK	BLUE	**
553-0110F	RED	BLANK	
553-0111F	RED	RED	
553-0112F	RED	GREEN	
553-0113F	RED	YELLOW	
553-0118F	RED	BLUE	**
553-0120F	GREEN	BLANK	
553-0121F	GREEN	RED	
553-0122F	GREEN	GREEN	
553-0123F	GREEN	YELLOW	
553-0128F	GREEN	BLUE	**
553-0130F	YELLOW	BLANK	
553-0131F	YELLOW	RED	
553-0132F	YELLOW	GREEN	
553-0133F	YELLOW	YELLOW	
553-0181F	BLUE	RED	
553-0182F	BLUE	GREEN	**
553-0188F	BLUE	BLUE	**
553-0199F	WHITE	WHITE	*/**
553-0201F	BLANK	RED	*
553-0202F	BLANK	GREEN	*
553-0203F	BLANK	YELLOW	*
553-0210F	RED	BLANK	*
553-0211F	RED	RED	*
553-0212F	RED	GREEN	*
553-0213F	RED	YELLOW	*
553-0220F	GREEN	BLANK	*
553-0221F	GREEN	RED	*
553-0222F	GREEN	GREEN	*
553-0223F	GREEN	YELLOW	*
553-0230F	YELLOW	BLANK	*
553-0231F	YELLOW	RED	*
553-0232F	YELLOW	GREEN	*
553-0233F	YELLOW	YELLOW	*
553-0301F	BLANK	RED	*
553-0302F	BLANK	GREEN	*
553-0303F	BLANK	YELLOW	*
553-0310F	RED	BLANK	*
553-0311F	RED	RED	*
553-0312F	RED	GREEN	*
553-0313F	RED	YELLOW	*
553-0320F	GREEN	BLANK	*
553-0321F	GREEN	RED	*
553-0322F	GREEN	GREEN	*
553-0323F	GREEN	YELLOW	*
553-0331F	YELLOW	RED	*
553-0332F	YELLOW	GREEN	*
553-0333F	YELLOW	YELLOW	*

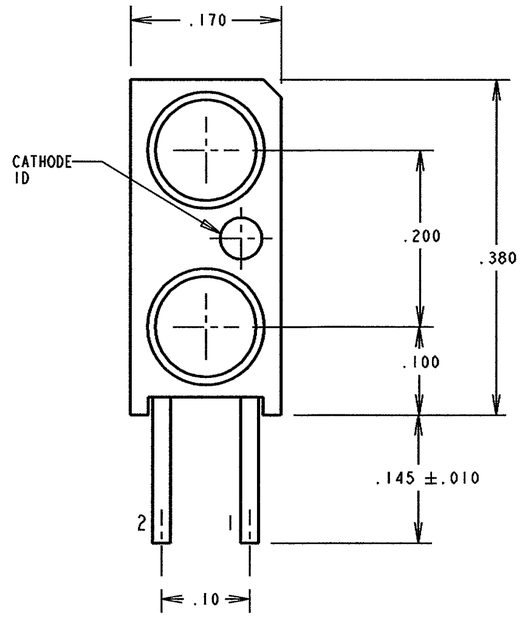

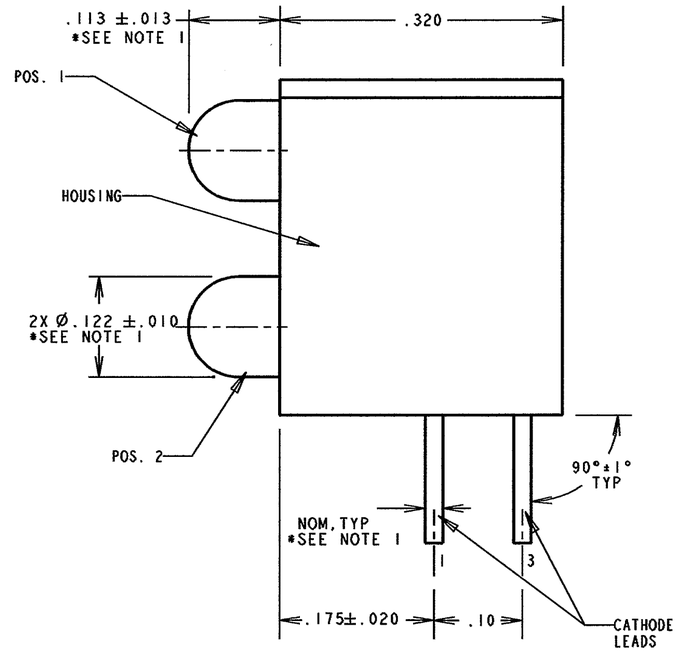

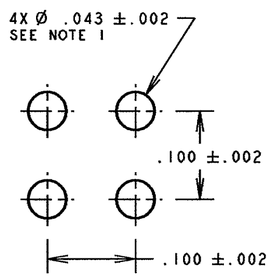

RECOMMENDED PC BOARD HOLE PATTERN

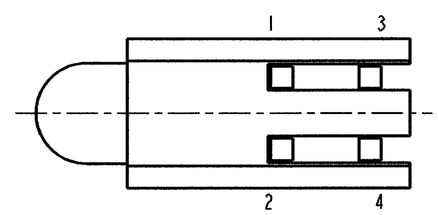

NOTE:

1. *DENOTES PARTS WITH LED PROTRUSION OF .103 ±.013, WITH LEADS .018 SQ.NOM., LED BODY Ø.115 ±.010 AND THE PC BOARD RECOMMENDED HOLE SIZE IS Ø.040 ±.002.
2. DIALIGHT PART NUMBER: 553-0XXXF
3. PIN NUMBER FOR REFERENCE ONLY, DESIGNATION NON-EXISTENT ON PARTS.
4. THIS ASSEMBLY CONTAINS ELECTROSTATIC DISCHARGE SENSITIVE DEVICES (ESDS). MAINTAIN ALL PRECAUTIONARY MEASURES DURING ASSEMBLY, HANDLING AND STORAGE IN ACCORDANCE WITH IPC-A-610.

20mA WHITE LED
OPERATING CHARACTERISTICS AT T_A = 25°C

SYMBOL	PARAMETER	MIN	TYP	MAX	UNITS	TEST COND.
V_F	FORWARD VOLTAGE		3.2	3.7	V	I_F=20mA
I_R		10			uA	V_R=5V
I_V	LUMINOUS INTENSITY	1150		2500	mcd	I_F=20mA

BIN		LIMITS (WHITE LED) (CHROMATICITY COORDINATES)			
1	X	0.330	0.330	0.356	0.361
	Y	0.360	0.318	0.351	0.385
2	X	0.287	0.296	0.330	0.330
	Y	0.295	0.276	0.318	0.339
3	X	0.264	0.280	0.296	0.283
	Y	0.267	0.248	0.276	0.305
4	X	0.283	0.287	0.330	0.330
	Y	0.305	0.295	0.339	0.360

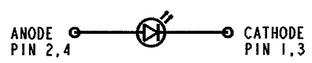

SINGLE COLOR LED SCHEMATIC

**ATTENTION:
OBSERVE PRECAUTIONS FOR HANDLING ELECTROSTATIC SENSITIVE DEVICES

10 ma LED.
OPERATING CHARACTERISTICS AT T_A =25°C

SYMBOL	PARAMETER	COLOR	MIN	TYP	MAX	UNITS	TEST COND.
V_F	FORWARD VOLTAGE	RED		2.0	3.0	V	I_F= 10 mA
		YELLOW		2.1	3.0		
		GREEN		2.1	3.0		
		BLUE		3.5	4.2		
V_R		ALL	3			V	I_R= 10μA
λ_{PK}	PEAK WAVELENGTH	RED		650		nm	MEASURED AT PEAK
		YELLOW		585			
		GREEN		563			
		BLUE		428			
I_V	LUMINOUS INTENSITY	RED	3.6	10.0		mcd	I_F= 10 mA
		YELLOW	2.2	6.3			
		GREEN	5.6	16.0			
		BLUE	6.3		20		

2 ma LOW CURRENT LED.
OPERATING CHARACTERISTICS AT T_A =25°C

SYMBOL	PARAMETER	COLOR	MIN	TYP	MAX	UNITS	TEST COND.
V_F	FORWARD VOLTAGE	RED		1.7	2.2	V	I_F = 2 mA
		YELLOW		1.8	2.7		
		GREEN		1.9	2.2		
V_R		ALL	5			V	I_R = 50 μA
λ_{PK}	PEAK WAVELENGTH	RED		635		nm	MEASURED AT PEAK
		YELLOW		583			
		GREEN		565			
I_V	LUMINOUS INTENSITY	RED	1.0	1.6		mcd	I_F = 2 mA
		YELLOW	1.0	1.6			
		GREEN	1.0	1.6			

5 V., INTEGRAL RESISTOR LED
OPERATING CHARACTERISTICS AT T_A =25°C

SYMBOL	PARAMETER	COLOR	MIN	TYP	MAX	UNITS	TEST COND.
I_F	FORWARD CURRENT	RED		10	20	mA	V_F= 5 V
		YELLOW		10	20		
		GREEN		10	20		
V_R		ALL	5			V	I_R= 100μA
λ_{PK}	PEAK WAVELENGTH	RED		635		nm	MEASURED AT PEAK
		YELLOW		585			
		GREEN		565			
I_V	LUMINOUS INTENSITY	RED	8.7	29		mcd	V_F= 5 V
		YELLOW	3.7	12.6			
		GREEN	5.6	19			

RoHS Compliant 553-0xxxF Thru hole Bi-level CBI

Part Numbers with the "F" suffix ending are RoHS Compliant.
Example: 553-0101F, 553-0333F
The bag packaging is marked with "RoHS Compliant" label or equivalent markings.
Parts can be wave soldered, dip soldered or hand soldered using typical lead-free soldering process with max 260°C temp. for 5 sec.

THIS DRAWING AND THE CONTENTS HEREIN ARE CONFIDENTIAL AND THE SOLE PROPERTY OF DIALIGHT. REPRODUCTION OF THIS DRAWING OR CONSTRUCTION OF ANY PARTS WITHIN THIS DRAWING ARE FORBIDDEN WITHOUT THE WRITTEN CONSENT OF DIALIGHT.

SCALE: DRAWING SCALE
ALL DIM'S IN: INCHES (MM)
TOLERANCES: UNLESS OTHERWISE SPECIFIED
FRACTIONS: ±1/64
DECIMALS (.XX): ±.02
DECIMALS (.XXX): ±.015
DECIMALS (.XXXX): ±.0005
ANGLES: ±1°
FINISH:
FSCM 83330

DRAWING NUMBER C-17277
REV F
TITLE 3mm LED BI-LEVEL CBI RoHS COMPLIANT
MATERIAL

Dialight
1501 ROUTE 34 SOUTH
FARMINGDALE, NJ 07727

SHEET 1 OF 1
FAMILY TABLES: