THIS DRAWING IS UNPUBLISHED. RELEASED FOR PUBLICATION ,19 .
© COPYRIGHT 19 BY AMP INCORPORATED. ALL RIGHTS RESERVED.

LOC	DIST
AA	22

REVISIONS

P	LTR	DESCRIPTION	DATE	DWN	APVD
	A	REVISED PER EC 0210-0442-95	08NOV95	DS	JT

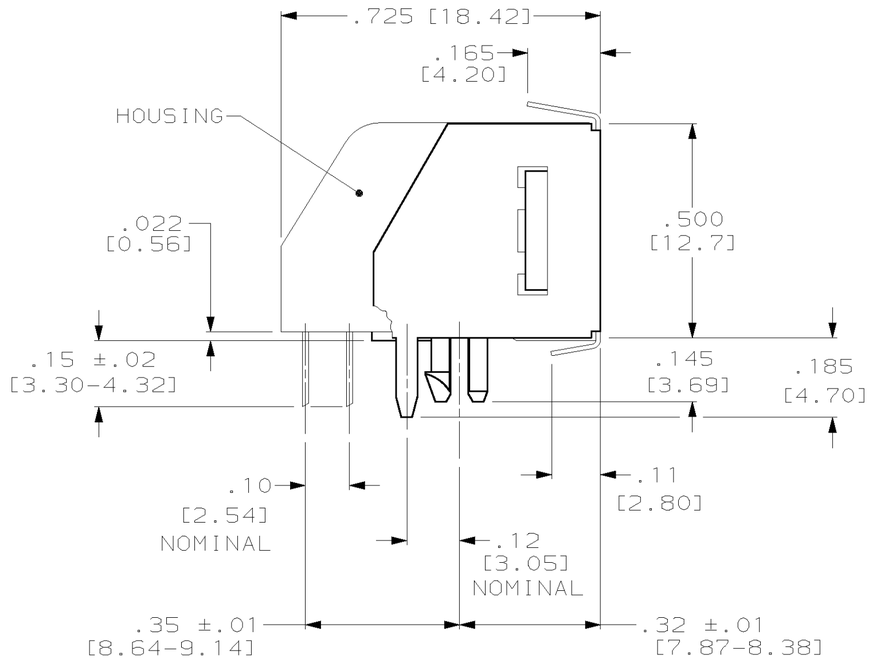

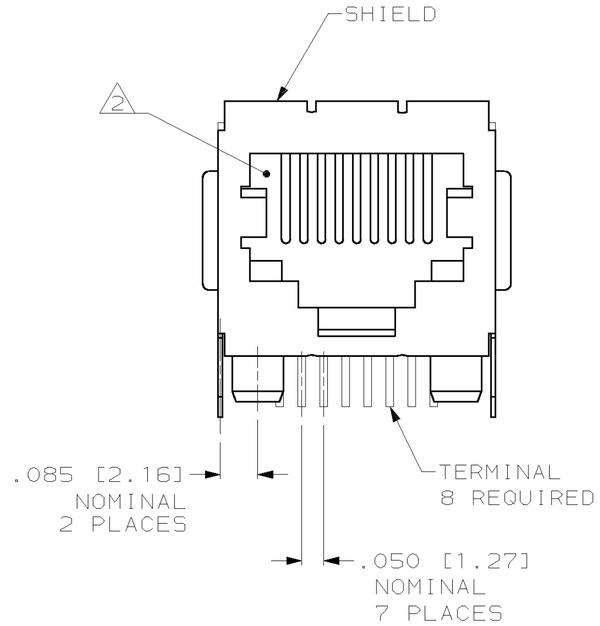

1. MATERIAL: HOUSING - PBT POLYESTER, BLACK.
TERMINAL - .0138 [0.35] THICK PHOS-BRONZE PLATED WITH .000050 [1.27μm] THICK HARD GOLD IN LOCALIZED GOLD PLATE AREA AND .000080 [2.03μm] MINIMUM THICK TIN-LEAD IN SOLDER AREA OVER .000050 [1.27μm] MINIMUM THICK NICKEL UNDERPLATE.
SHIELD - .010 [0.25] THICK COPPER ALLOY, TIN-LEAD PLATED.

2. CAVITY CONFORMS TO FCC RULES AND REGULATIONS PART 68, SUBPART F.

3. FOR APPLICATION INFORMATION SEE AMP SPEC 114-2048.

4. FOR PERFORMANCE REQUIREMENTS SEE AMP SPEC 108-1163.

5. ALL DIMENSIONS ARE MAXIMUM UNLESS OTHERWISE SPECIFIED.

6. DIMENSIONS IN BRACKETS [ ] ARE IN MILLIMETERS.

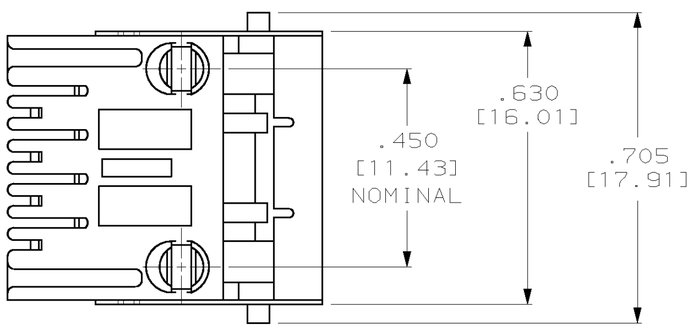

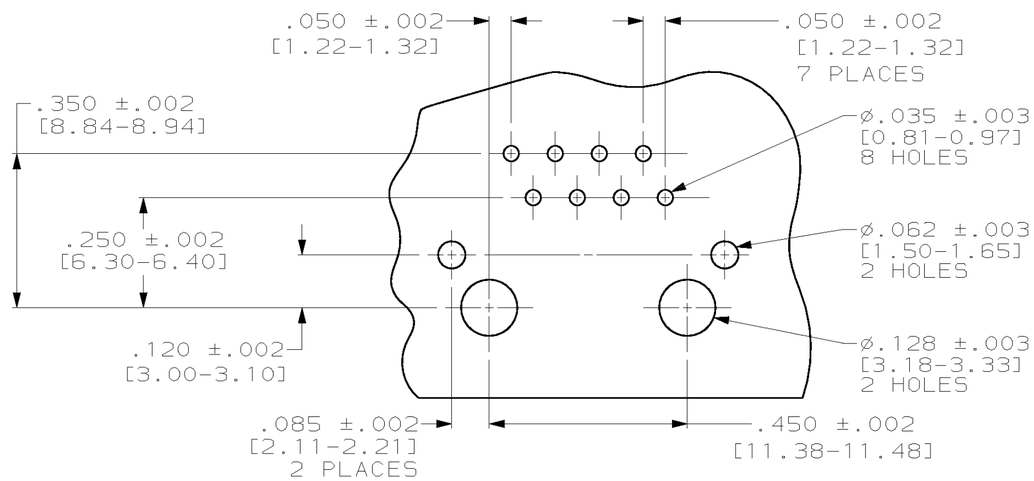

SUGGESTED PRINTED CIRCUIT BOARD
MOUNTING HOLE LAYOUT
VIEW SHOWN AS CIRCUIT SIDE OF BOARD

556926

556926-1
PART NUMBER

THIS DRAWING IS A CONTROLLED DOCUMENT.

DIMENSIONS: INCHES [mm]

TOLERANCES UNLESS OTHERWISE SPECIFIED:
0 PLC ±-
1 PLC ±-
2 PLC ±-
3 PLC ±-
4 PLC ±-
ANGLES ±-
5

MATERIAL 1
FINISH 1

DWN D. STRAUSSER 30 JAN 91
CHK B. FOX 04 APR 91
APVD G. REED 04 APR 91
PRODUCT SPEC —
APPLICATION SPEC —
WEIGHT —

AMP Incorporated
Harrisburg, PA 17105-3608

NAME MODULAR JACK ASSEMBLY, SHIELDED, 8 POSITION, LOW PROFILE, RIGHT ANGLE, WITH PANEL GROUNDS

SIZE	CAGE CODE	DRAWING NO	RESTRICTED TO
A2	00779	C-556926	—

CUSTOMER DRAWING | SCALE 4:1 | SHEET 1 OF 1 | REV A