62 Compression Latch

Small · Lift & turn series · Flush style · Adjustable grip

- **Low profile when latched**
- **Easy grip adjustment**
- **Intuitive operation**

Material and Finish

Zinc alloy, powder coated or chrome plated and steel, zinc plated

Performance Details

Max. static load: 220N (50 lbf)

Sealing Notes

*Environmental sealing is achieved by using dust and moisture sealed option and sealing the mounting screw threads.

Installation Notes

**Screw and lockwasher assembly M4 x 10. For door thickness greater than 3 (.11) calculate screw length using the following formula: Door thickness + 7 (.28)

***Add 0.4 (.02) to door thickness when using cup gasket

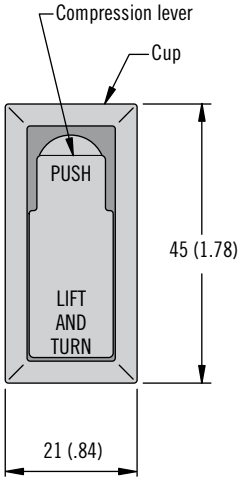

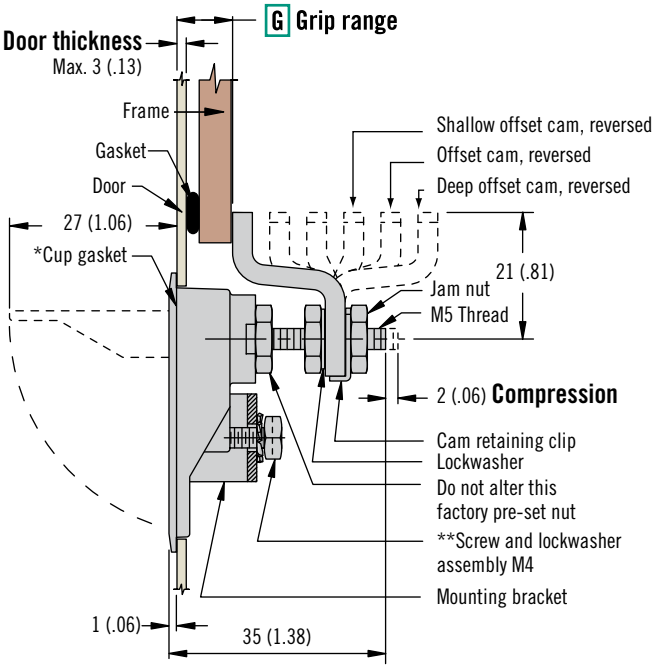

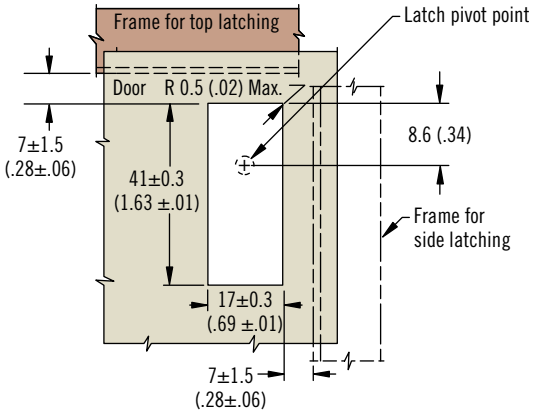

ACTUAL SIZE

Part Number Selection

62 - 7 S - G F

S Sealing option
- **0** No Gasket
- **4** Gasket Included see *sealing and ***installation notes

F Finish
- **1** Polished chrome
- **2** Brushed chrome
- **5** Black powder coated

G Grip	Min.	Max.	Cam Type
1	4.5 (.17)	10.5 (.41)	Deep offset cam, forward
	34.5 (1.35)	40.5 (1.59)	Deep offset cam, reversed
2	10.5 (.41)	16.5 (.65)	Offset cam forward
	28.5 (1.12)	34.5 (1.35)	Offset cam reverse
3	16.5 (.65)	22.5 (.88)	Shallow offset cam, forward
	22.5 (.88)	28.5 (1.12)	Shallow offset cam, reversed

62 Compression Latch

Medium · Lift & turn series · Flush style · Adjustable grip

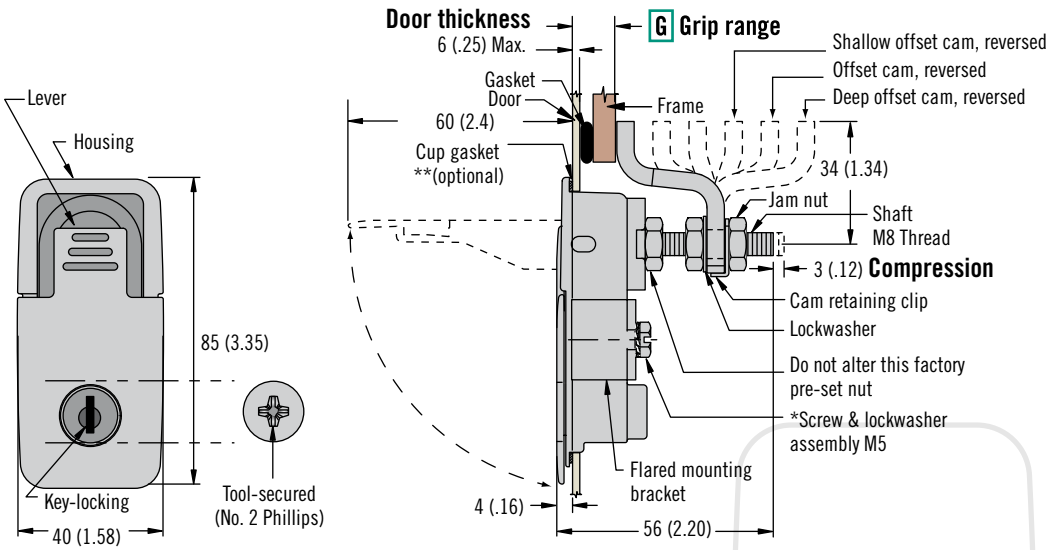

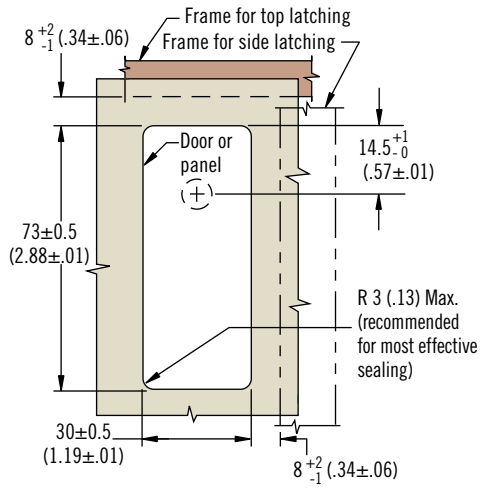

ACTUAL SIZE

- **Low profile when latched**
- **Easy grip adjustment**
- **Intuitive operation**

Material and Finish

Zinc alloy, powder coated or chrome plated and steel, zinc plated

Performance Details

Max. static load: 440 N (100 lbf)

Sealing Notes

Environmental sealing is achieved by using a cup gasket and sealing the mounting screw threads.

Installation Notes

*Screw and lockwasher assembly M5 x 16. For door thickness greater than 6 (.25) calculate screw length using the following formula:
Door thickness + 10 (.39)

**Add 0.4 (.02) to door thickness when using cup gasket

Accessories

Cup gasket:
Part number: 62-973-431

Keys

See page 58

Notes

For lock core selection and a complete overview of the *SOUTHCO®* Key-Choice System see pages 182 - 183

Part Number Selection

62 - 4 L - G F 1 - P

L Lock style
- **0** Non-locking
- **2** Key-locking without dust shutter keyed alike CH751
- **3** Tool secured No. 2 Phillips
- **21** Locking without lock core (order separately see pages 182 - 183)

F Finish
- **0** Textured chrome
- **1** Polished chrome
- **5** Black powder coated

P Packaging option
- **3** Layer packed
- **2** Individually packed

G Grip	Min.	Max.	Cam Type
1	6 (.23)	16 (.63)	Deep offset cam, forward
	56 (2.20)	66 (2.59)	Deep offset cam, reversed
2	16 (.63)	26 (1.02)	Offset cam forward
	46 (1.81)	56 (2.20)	Offset cam reverse
3	26 (1.02)	36 (1.41)	Shallow offset cam, forward
	36 (1.41)	46 (1.81)	Shallow offset cam, reversed

62 Compression Latch

Large · Lift & turn series · Flush style · Adjustable grip

- **Low profile when latched**
- **Easy grip adjustment**
- **Intuitive operation**

Material and Finish

Zinc alloy, chrome brushed and steel, zinc plated

Performance Details

Max. static load: 1250 N (280 lbf)

Installation Notes

*Screw and lockwasher assembly 5/16-18UNC x 3/4.
For door thickness greater than 6 (.25) calculate screw length using the following formula:
Door thickness + 7 (.28)

Accessories

Actuator for three point locking assembly (order separately)
Part number: 62-19-501-15

Keys

See page 58

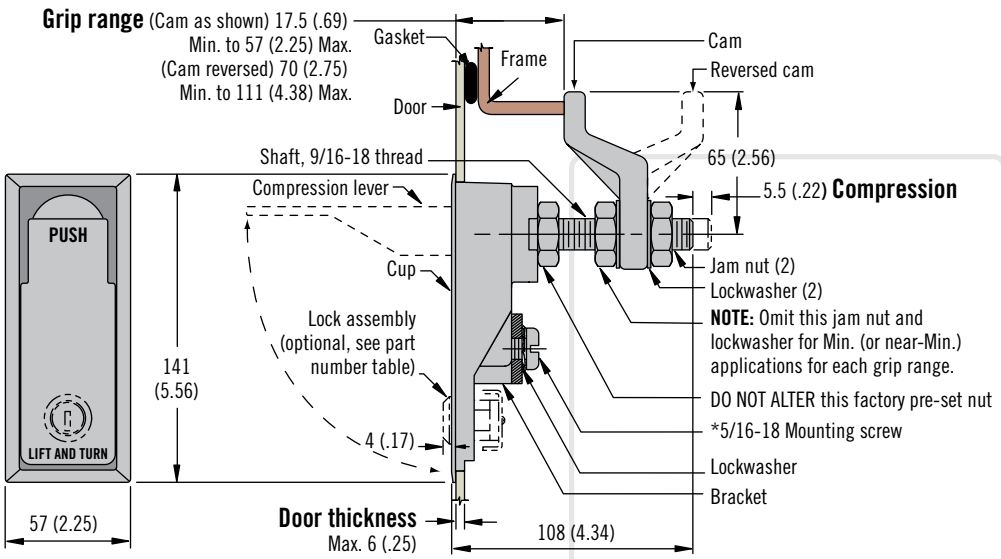

ACTUAL SIZE

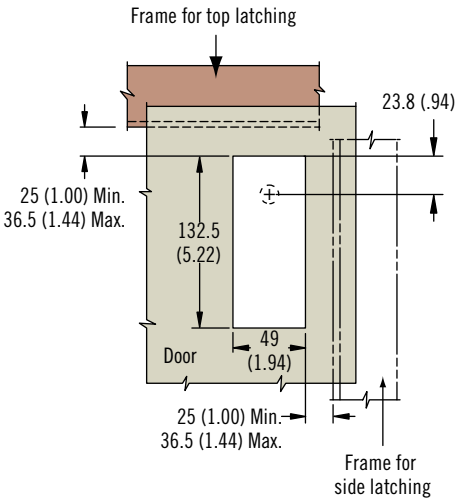

Part Number Selection

H **Head style**
- **0** Non-locking
- **1** Key-locking keyed alike CH751 (two flat keys supplied)

62 - 10 - 8 H 1 - 20

62 Compression Latch

Miniature · Lift & turn series · Handle style · Adjustable grip

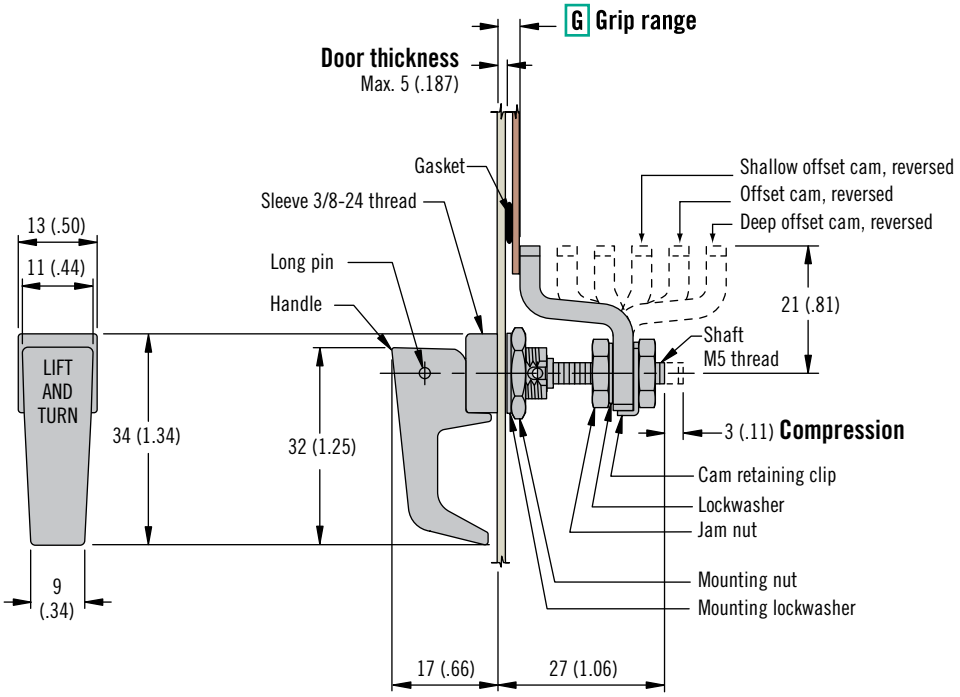

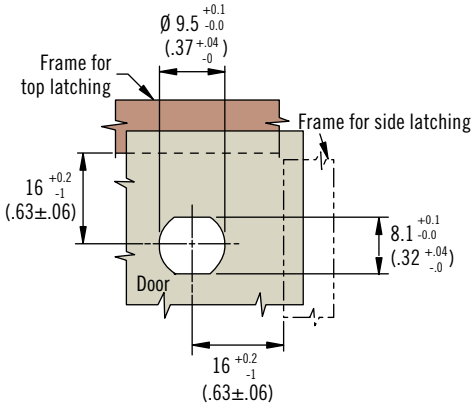

- **Easy grip adjustment**
- **Intuitive operation**

Material and Finish

Zinc alloy, powder coated or chrome plated and steel, zinc plated

Performance Details

Max. static load: 220 N (50 lbf)

Part Number Selection

62 - 20 - G F

F Finish

1 Polished chrome
5 Black powder coated

G Grip	Min.	Max.	Cam Type
1	0 (0)	4 (.16)	Deep offset cam, forward
	28 (1.10)	34 (1.34)	Deep offset cam, reversed
2	4 (.16)	10 (.39)	Offset cam, forward
	22 (.87)	28 (1.10)	Offset cam, reverse
3	10 (.39)	16 (.63)	Shallow offset cam, forward
	16 (.63)	22 (.87)	Shallow offset cam, reversed

62 Compression Latch

Small · Lift & turn series · Handle style · Adjustable grip

- **Easy grip adjustment**
- **Intuitive operation**

Material and Finish

Zinc alloy, powder coated or chrome plated and steel, zinc plated

Performance Details

Max. static load: 550 N (125 lbf)

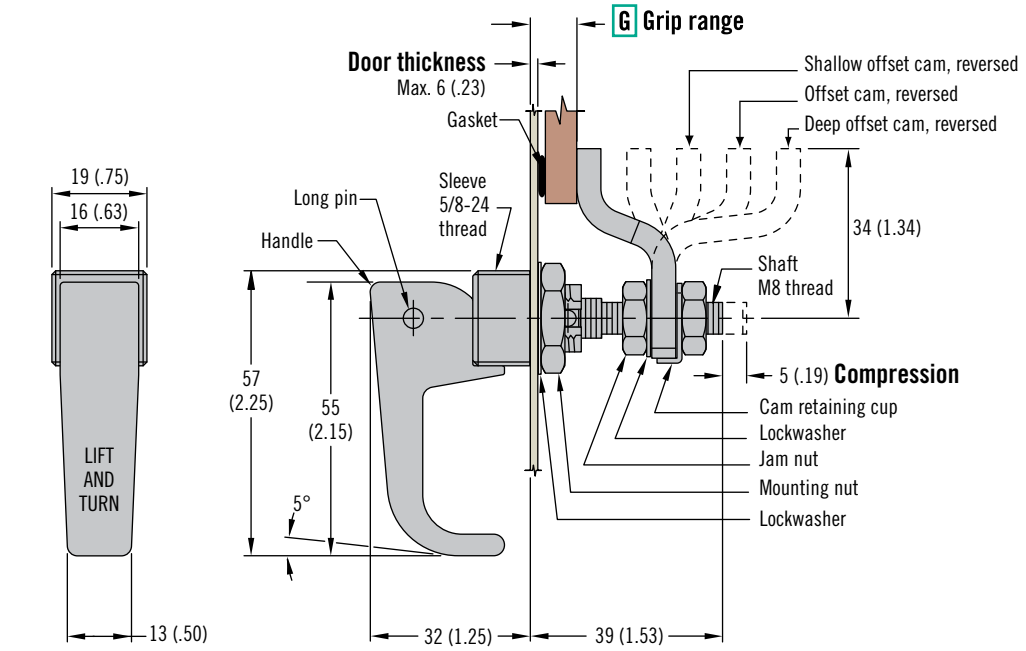

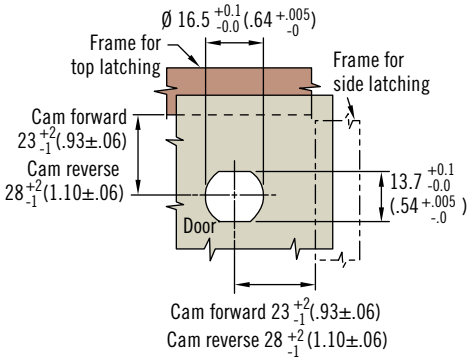

Part Number Selection

62 - 10 - G F

F Finish

1 Polished chrome
2 Brushed chrome
3 Natural with chemical protective film
5 Black powder coated

G Grip	Min.	Max.	Cam Type
1	42 (1.66)	52 (2.05)	Deep offset cam, forward
2	2 (.08)	12 (.47)	Offset cam, forward
	32 (1.25)	42 (1.66)	Offset cam, reversed
3	12 (.47)	22 (.87)	Shallow offset cam, forward
	22 (.87)	32 (1.25)	Shallow offset cam, reversed

62 Compression Latch

Medium · Lift & turn series · Handle style · Adjustable grip

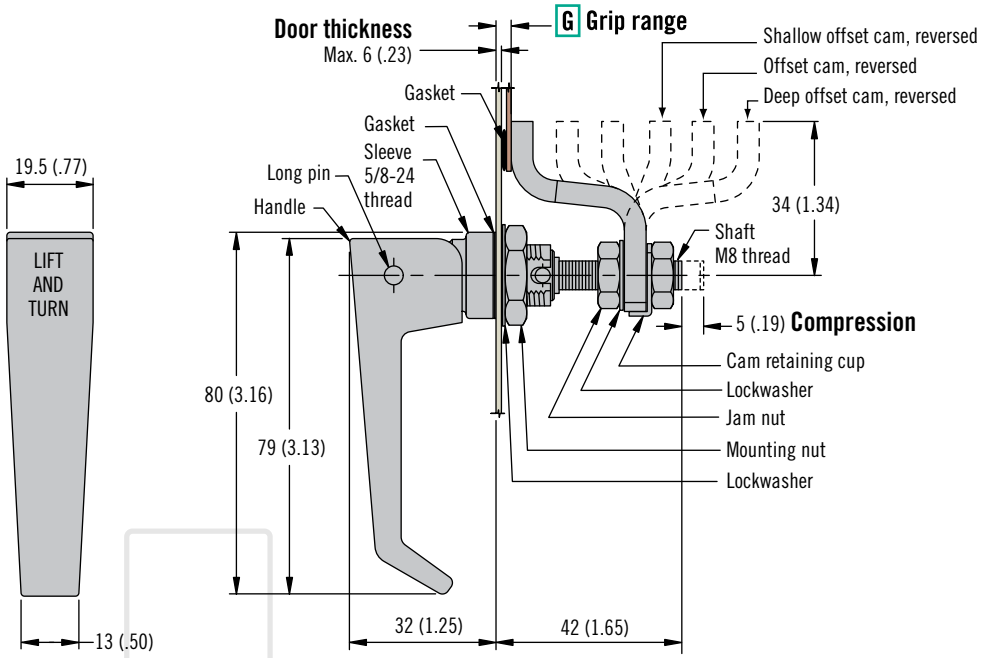

ACTUAL SIZE

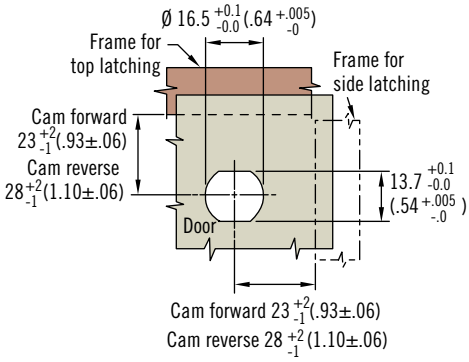

- **Easy grip adjustment**
- **Intuitive operation**

Material and Finish

Zinc alloy, powder coated or chrome plated and steel, zinc plated

Performance Details

Max. static load: 670 N (150 lbf)

Notes

Larger sizes available, visit www.southco.com/62

Part Number Selection

62 - 30 - G F

F Finish
1 Polished chrome
2 Brushed chrome
5 Black powder coated

G Grip	Min.	Max.	Cam Type
1	0 (0)	5 (.20)	Deep offset cam, forward
	45 (1.77)	55 (2.16)	Deep offset cam, reversed
2	5 (.20)	15 (.59)	Offset cam, forward
	35 (1.37)	45 (1.77)	Offset cam, reversed
3	15 (.59)	25 (.98)	Shallow forward
	25 (.98)	35 (1.37)	Shallow reversed

Southco® 62 Compression Latch
Lift & Turn

The composite Lift & Turn latch is a light- to medium-duty latch, utilizing engineering plastic in its major components to reduce weight yet maintain excellent strength. When the lever is in the upright position, it rotates 360° to move the cam behind the support in any one of three 90° positions. Once in place, the lever closes flush with the housing, providing 5 mm of axial pull, locking the device with an over-center action.

The latch is secured into a panel by a mounting bracket that adjusts to various thicknesses. Snap-in installation is provided for 5 mm thick panels. By using cams of various offsets, different grip ranges are easily accommodated.

Features

- **Broad Application Range**
  Latch can be fitted to panel range 0.5 mm – 9.0 mm and has a grip range of between 10.5 mm – 49.4 mm
- **Double Action Latching & Compression**
  Allows secure fastening of doors and panels which contain gaskets and seals
- **No Adjustments Required When Fitted**
  Fixed cam design prevents incorrect grip setting
- **4 Cam Orientation Settings**
  Cam may be fitted at 90° / 180° / 270° / 360° to the latch body center line, allowing for a wide variety of mounting positions
- **Robust Polyamide Construction**
  High strength nylon is used in the main components to ensure a durable product. The material has a V2 flammability rating to UL94

Typical Applications

- Telecoms base station doors & side access panels
- Electrical switchgear cabinets
- Computer server racks & enclosures
- Games machine doors & panels
- HVAC control equipment enclosures
- Storage lockers on stations/building sites
- Cupboards/lockers on trains/boats/ commercial vehicles

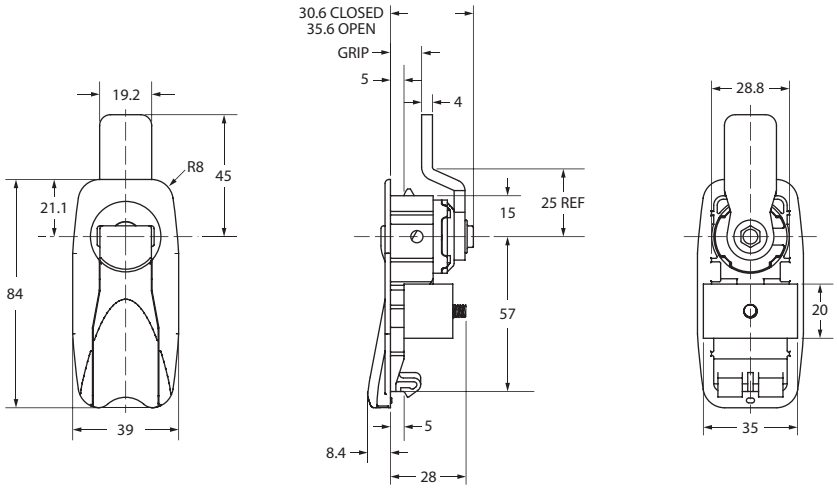

Notes:

1. *Panel hole dimensions: 73 mm x 30 mm for panel thickness 0.5 mm to 5.0 mm; 75 mm x 30 mm for panel thickness 5.1 mm to 9.0 mm.*
2. *Latch shown in closed position.*

Parts Selection

Latch bodies and cams are ordered separately. Choose cam based on grip range required for your application.

Latch Body

Part Number	62-424-700

Cam

Grip Range (mm)	Cam Offset (mm)	Cam Part Number
10.5 to 12.4	-14	E5-6003
12.5 to 14.4	-12	E5-6004
14.5 to 16.4	-10	E5-6005
16.5 to 19.4	-8	E5-6006
20.5 to 21.4	-4	E5-6008
21.5 to 23.4	-2	E5-6009
23.5 to 25.4	Flat	E5-6010
25.5 to 27.4	2	E5-6011
27.5 to 29.4	4	E5-6012
29.5 to 30.4	6	E5-6013
31.5 to 33.4	8	E5-6014
33.5 to 35.4	10	E5-6015
35.5 to 37.4	12	E5-6016
37.5 to 39.4	14	E5-6017
39.5 to 40.4	16	E5-6018
41.5 to 43.4	18	E5-6019
43.5 to 45.4	20	E5-6020
45.5 to 47.4	22	E5-6021
47.5 to 49.4	24	E5-6022

All dimensions on this page are in millimeters.

Southco® Compression Latches

Lift and Turn Series, Handle Style

- **Medium and Large sizes**
- **Use actuator with Large size for 3-point latching (See pages 160 to 164)**

Medium

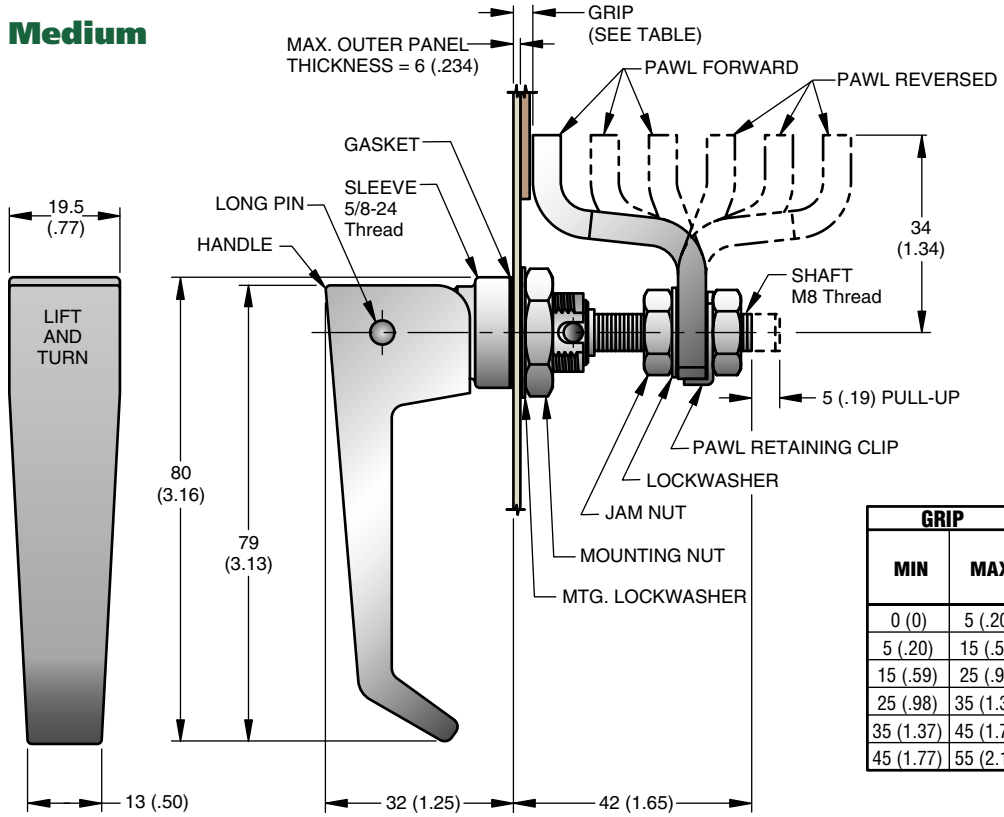

GRIP		PART NUMBER		
MIN	MAX	POLISHED CHROME	BRUSHED CHROME	BLACK POWDER COATED
0 (0)	5 (.20)	62-30-**11** •	62-30-**12** •	62-30-**15** •
5 (.20)	15 (.59)	62-30-**21** •	62-30-**22** •	62-30-**25** •
15 (.59)	25 (.98)	62-30-**31** •	62-30-**32** •	62-30-**35** •
25 (.98)	35 (1.37)	62-30-**31** •	62-30-**32** •	62-30-**35** •
35 (1.37)	45 (1.77)	62-30-**21** •	62-30-**22** •	62-30-**25** •
45 (1.77)	55 (2.16)	62-30-**11** •	62-30-**12** •	62-30-**15** •

Large

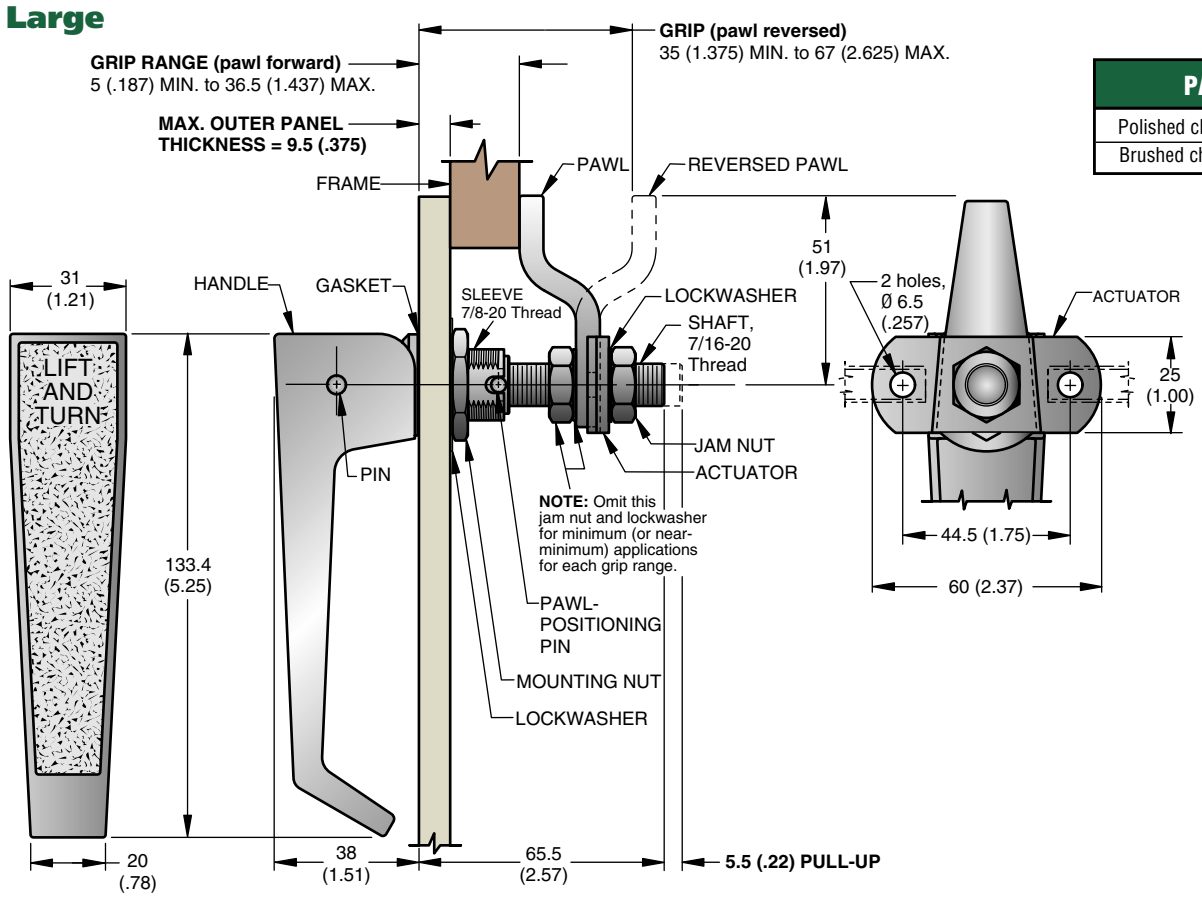

PART NUMBER	
Polished chrome	62-10-603-**10** •
Brushed chrome	62-10-603-**20** •

• Products identified with this symbol are stocked subject to prior sale in one or more of our global locations. If unavailable from our facility nearest you, allow for shipping time from another facility.

Installation

1. Locate and orient hole with respect to handle in latched position as shown in next step. This hole orientation is preferred for all latching positions.

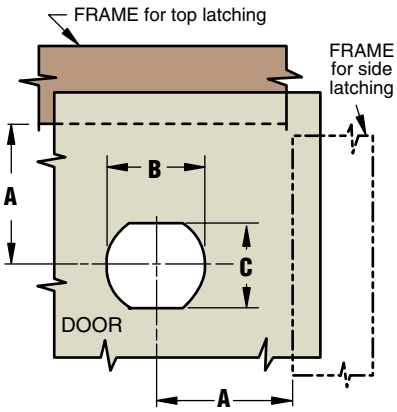

DIMENSIONS	SERIES	
	MEDIUM	LARGE
A	23^{+2}_{-1} (.93 ±.06) PAWL FORWARD	41 (1.623) MIN.
	28^{+2}_{-1} (1.10 ±.06) PAWL REVERSED	47.5 (1.875) MAX.
B	Ø $16.5^{+0.1}_{-0.0}$ (.640 $^{+.005}_{-.000}$)	Ø $22^{+0.2}_{-0.0}$ (.875 $^{+.010}_{-.000}$)
C	$13.7^{+0.1}_{-0.0}$ (.540 $^{+.005}_{-.000}$)	$19^{+0.2}_{-0.0}$ (.750 $^{+.010}_{-.000}$)

2. Assemble as shown.

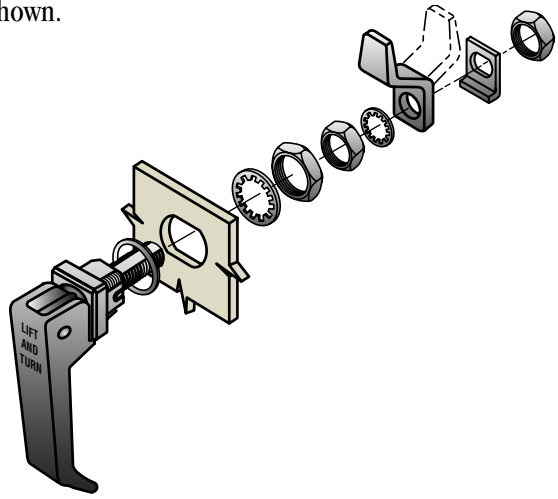

3. Pawl should be adjusted to GRIP measurement with the door open and the handle in the LATCHED position. Use two wrenches to tighten.

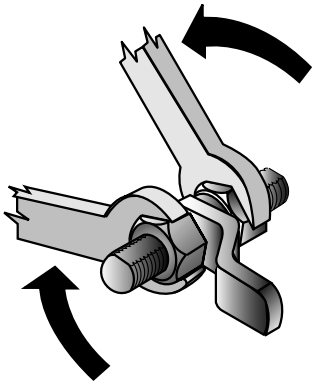

Material and Finish

HANDLE and SLEEVE: Die-cast zinc (see table).
WASHER and SPRING: 302 Stainless steel, passivated.
O-RING: Buna-N rubber, natural.
LONG PIN and SHAFT: 303 Stainless steel, passivated or passivated with black oxide.
GASKET: Fibre, natural.
PAWL POSITIONING PIN: 303 Stainless steel, natural or with black oxide.

For medium style
BUSHING: Aluminum, natural or with black organic coating.
NUTS: Low carbon steel, zinc plate, chromate plus sealer.
PAWL and PAWL RETAINING CLIP: 1010 Steel, zinc plate,chromate plus sealer.

For large style
PAWL and ACTUATOR: 1010 Steel, zinc alloy plate, bright chromate plus sealer.
WASHER: 303 Stainless steel, passivated.
BUSHING: Aluminum, natural.
MOUNTING NUT: Brass, zinc plate, chromate plus sealer.
LOCKWASHERS: Spring steel, zinc alloy plate, bright chromate plus sealer.
JAM NUTS: Low carbon steel, zinc alloy plate, bright chromate plus sealer.

Product Strength Guidelines

(To assist in your product selection; samples are available for your evaluation.)

Medium style
Maximum static load: 670 N (150 lbs.)
Average ultimate load: 1100 N (250 lbs.)

Large style
Maximum static load: 890 N (200 lbs.)
Average ultimate load: 1550 N (350 lbs.)

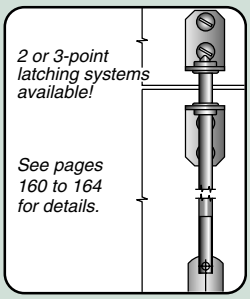

Note: Contact Southco for information on handles without lettering.

millimeter (inch)

millimeter
(inch)

Dimensions without tolerances are for reference only.

Southco® Compression Latches

Lift and Turn Series, Handle Style

- **Heavy-duty**
- **Optional padlock bracket**
- **Use with actuator for 3-point latching** **(See pages 160 to 164)**

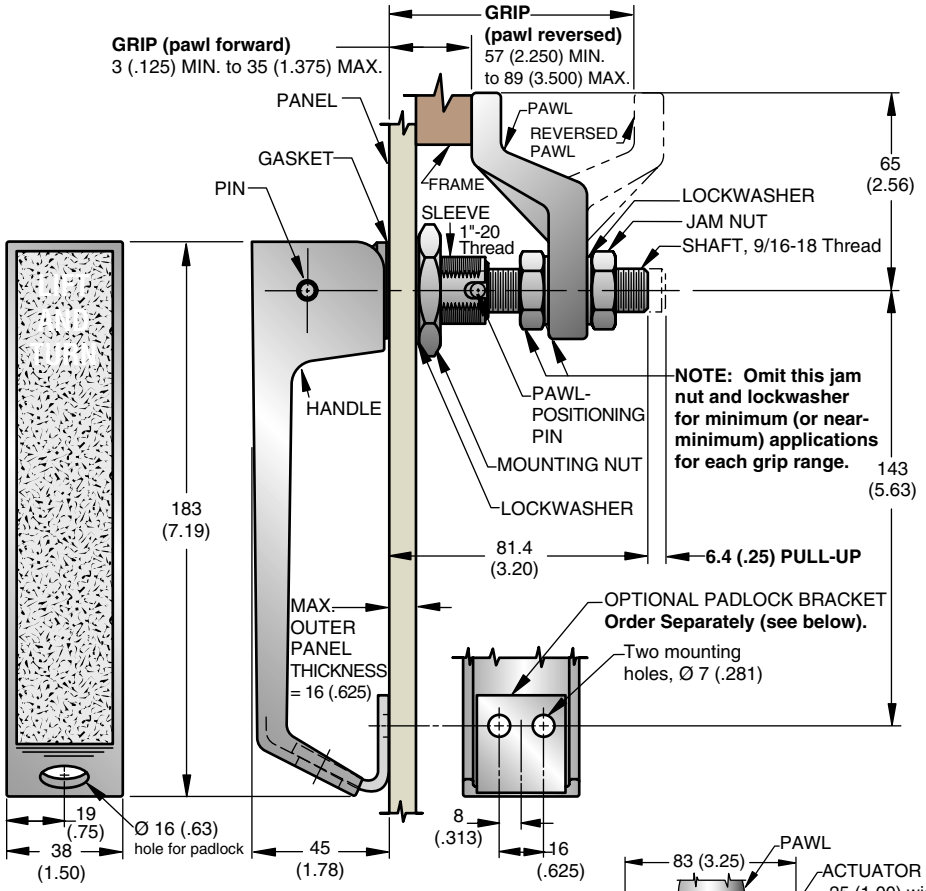

ACTUATOR for 3-point latching.

2 or 3-point latching systems available!
See pages 160 to 164 for details.

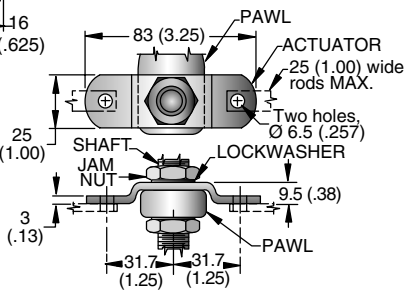

Material and Finish

HANDLE and SLEEVE: Die-cast zinc, chrome plated. MOUNTING NUT and PAWL: Die-cast zinc with chemical protective film.
GASKET: Fibre, natural.
SPRING and WASHER: 302 Stainless steel, passivated. O-RING: Buna-N Rubber, natural.
LONG PIN: 303 Stainless steel, natural. PAWL POSITIONING PIN: 1213 Steel, zinc alloy plate, bright chromate plus sealer. SHAFT and BUSHING: Low carbon steel, zinc alloy plate, bright chromate plus sealer. JAM NUTS: Low carbon steel, zinc plated plus chromate dip.
LOCKWASHER: Spring steel, zinc plated plus chromate dip.
PAWL LOCKWASHERS: Spring steel, zinc plated plus bright chromate dip.

OPTIONAL PADLOCK BRACKET: 302 Stainless steel, passivated.

FOR 3-POINT LATCHING SYSTEMS
ACTUATOR: 1010 Steel, zinc alloy plate, bright chromate plus sealer.

Product Strength Guidelines

(To assist in your product selection; samples are available for your evaluation.)

Maximum static load: 1250 N (280 lbs.)
Average ultimate load: 2200 N (500 lbs.)

PART NUMBER	
Handle Assembly	62-10-503-10 ●
Padlock Bracket	62-36-501-24 ●
Actuator	62-19-501-15 ●

Installation

1. Locate and orient hole with respect to handle in latched position as shown in next step. This hole orientation is preferred for all latching positions.

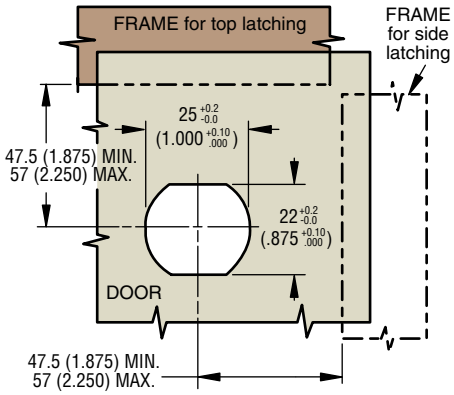

2. Assemble as shown.

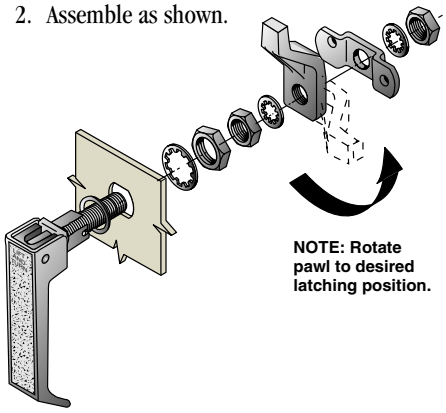

3. Pawl should be adjusted to GRIP measurement with the door open and the handle in the LATCHED position. Use two wrenches to tighten.

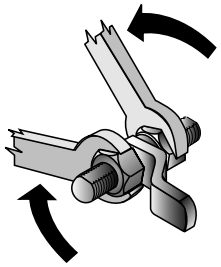

millimeter (inch)

millimeter
(inch)

Dimensions without tolerances are for reference only.

• Products identified with this symbol are stocked subject to prior sale in one or more of our global locations. If unavailable from our facility nearest you, allow for shipping time from another facility.