THIS DRAWING IS UNPUBLISHED. RELEASED FOR PUBLICATION ,19 .
© COPYRIGHT 19 BY AMP INCORPORATED. ALL RIGHTS RESERVED.

LOC	DIST
CM	53

REVISIONS

P	LTR	DESCRIPTION	DATE	DWN	APVD
	B	REV PER EC 0G1B-0094-99	23-SEP-99	KW	KC

1. DIMENSIONS IN BRACKETS ARE IN INCHES.

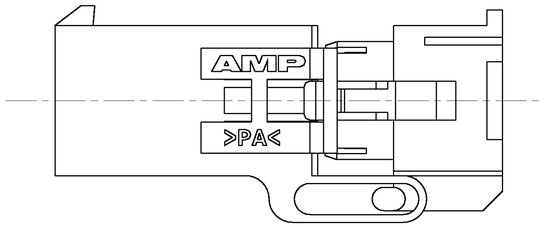

PRE-STAGED CONDITION

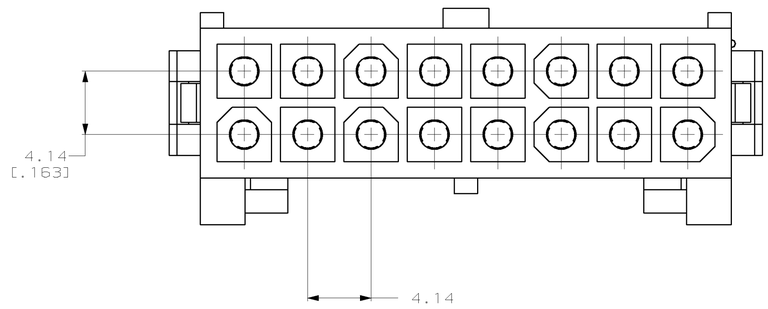

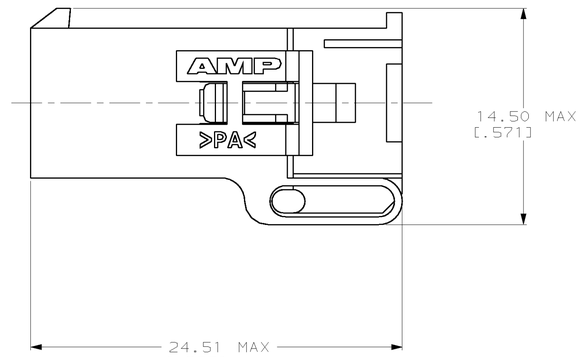

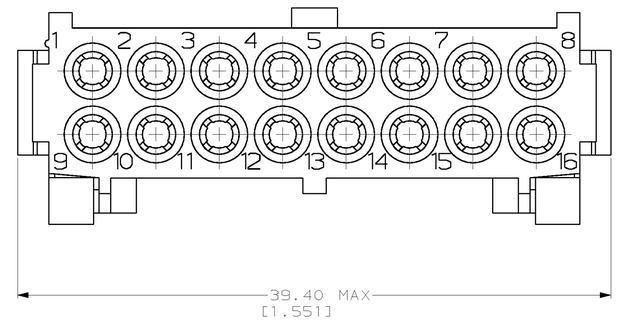

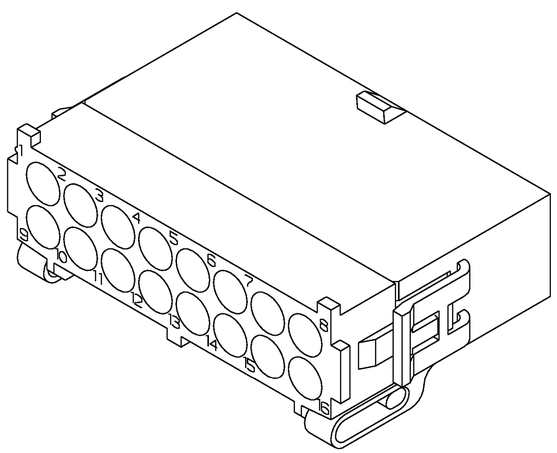

3-DIMENSIONAL MODEL
NTS

794260-1
PART NUMBER

THIS DRAWING IS A CONTROLLED DOCUMENT.

DIMENSIONS: mm

TOLERANCES UNLESS OTHERWISE SPECIFIED.
0 PLC ±-
1 PLC ±-
2 PLC ±-
3 PLC ±0.13 [.005]
4 PLC ±-
ANGLES ±-

MATERIAL: NYLON, UL 94V-2, NATURAL
FINISH: –

DWN: K. WHITAKER 5-19-97
CHK: R. SWING 5-19-97
APVD: R. ORSTAD 5-19-97
PRODUCT SPEC: –
APPLICATION SPEC: –
WEIGHT: –

AMP Incorporated
Harrisburg, PA 17105-3608

NAME: CAP, 16 CIRCUIT, MINI UNIVERSAL MATE-N-LOK™ 2

SIZE	CAGE CODE	DRAWING NO	RESTRICTED TO
A1	00779	C-794260	–

CUSTOMER DRAWING | SCALE 5:1 | SHEET 1 OF 1 | REV B

METRIC

AMP 4805 REV 27JUN96