THIS DRAWING IS UNPUBLISHED. RELEASED FOR PUBLICATION 2006
© COPYRIGHT 2006 BY TYCO ELECTRONICS CORPORATION. ALL RIGHTS RESERVED.

| LOC | DIST |
|---|---|
| A1 | - |

REVISIONS

| P | LTR | DESCRIPTION | DATE | DWN | APVD |
|---|---|---|---|---|---|
| | A2 | ECR-09-013545 | 12MAY2009 | SR | AR |

NOTES

1 PART SHALL BE FREE AND CLEAN OF BURRS AND OTHER FOREIGN MATERIAL

2 PACKAGING: QUANTITY 3 PIECES

3 VARNISHING INSIDE HOUSING NOT REQUIRED

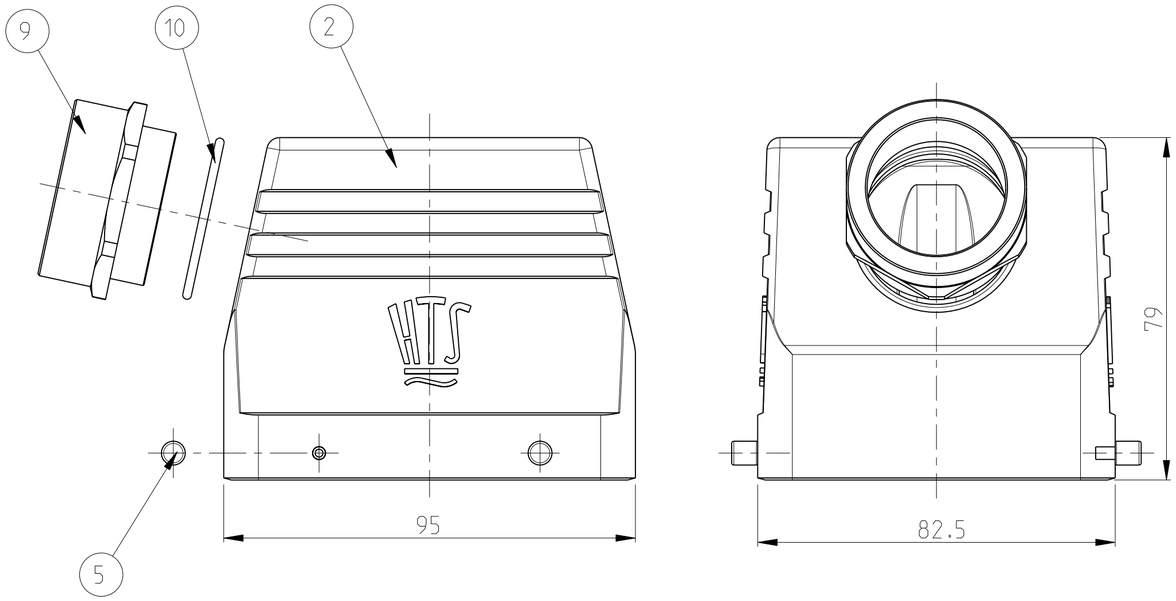


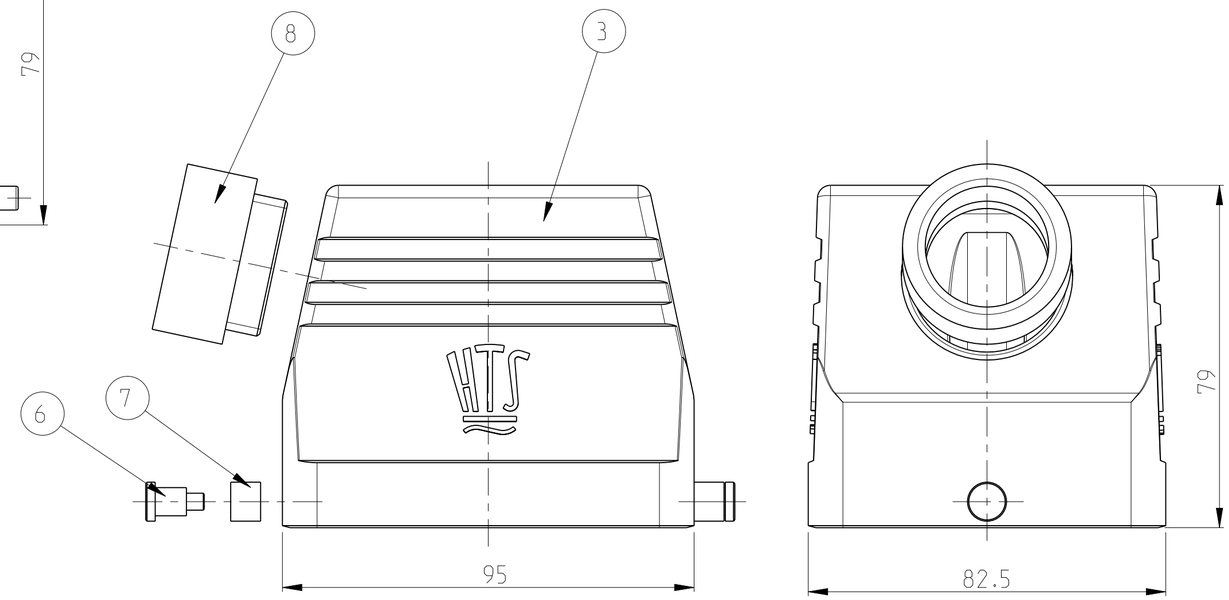


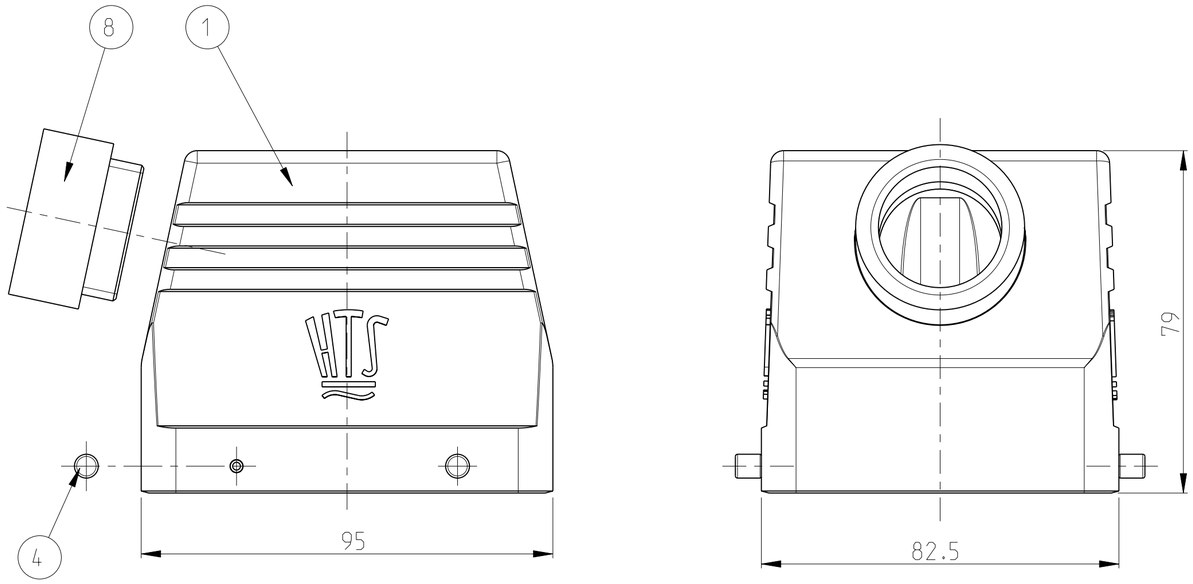


| 1-7 | 2-6 | 1-6 | DESCRIPTION | MATERIAL | SURFACE | COLORE | ITEM | NOTES |
|---|---|---|---|---|---|---|---|---|
| | 1 | | O-RING | NEOPRENE | | BLACK | 10 | PG29 |
| | 1 | | ADAPTOR | BRASS | NICKEL PLATED | BLUE | 9 | PG29 |
| 1 | | 1 | ADAPTOR ROUND | BRASS | NICKEL PLATED | BLUE | 8 | PG29 |
| 2 | | | SLIDE SPOOL | STEEL | ZINC PLATED | BLUE | 7 | |
| 2 | | | CLIP BOLT | STEEL | ZINC PLATED | BLUE | 6 | |
| | 4 | | CLIP BOLT | STAINLESS STEEL | BLANC | | 5 | |
| | | 4 | CLIP BOLT | STEEL | ZINC PLATED | BLUE | 4 | |
| 1 | | | HOOD | ALUMINIUM | | GREY | 3 | |
| | 1 | | HOOD | ALUMINIUM | ALUMINIUM OXID | BLACK | 2 | |
| | | 1 | HOOD | ALUMINIUM | | GREY | 1 | |

HB.32.STS.1.29.Z

HB-K.32.STS.1.29.Z

HB.32.STS-GR.1.29.Z

THIS DRAWING IS A CONTROLLED DOCUMENT FOR TYCO ELECTRONICS CORPORATION. IT IS SUBJECT TO CHANGE AND THE CONTROLLING ENGINEERING ORGANIZATION SHOULD BE CONTACTED FOR THE LATEST REVISION.

DIMENSIONS: mm

TOLERANCES UNLESS OTHERWISE SPECIFIED:
0 PLC ±-
1 PLC ±-
2 PLC ±-
3 PLC ±-
4 PLC ±-
ANGLES ±1°

MATERIAL -

FINISH -

DWN R.SCHNEIDER 12MAY2009
CHK T.SCHNURPFEIL 12MAY2009
APVD -
PRODUCT SPEC -
APPLICATION SPEC -
WEIGHT -

Tyco Electronics
tyco Electronics AMP GmbH
53757 Sankt Augustin (Germany)

NAME HOOD HB.32.STS.1.29.Z -

| SIZE | CAGE CODE | DRAWING NO | RESTRICTED TO |
|---|---|---|---|
| A2 | 00779 | C-1102347 | - |

CUSTOMER DRAWING | SCALE 1:1 | SHEET 1 OF 1 | REV A2

AMP 1471-9 REV 31MAR2000

Pro/ENGINEER DRAWING