THIS DRAWING IS UNPUBLISHED. RELEASED FOR PUBLICATION -,- .
© COPYRIGHT - BY TYCO ELECTRONICS CORPORATION. ALL RIGHTS RESERVED.

LOC	DIST
G	14

REVISIONS

P	LTR	DESCRIPTION	DATE	DWN	APVD
	R1	REV PER ECR 10-000692	13JAN10	JR	TM

AMP WIRE RANGE	E13288 Listed	LR7189 Certified
16-14 AWG SOLID OR STRANDED	16-14 AWG SOLID OR STRANDED	16-14 AWG SOLID OR STRANDED

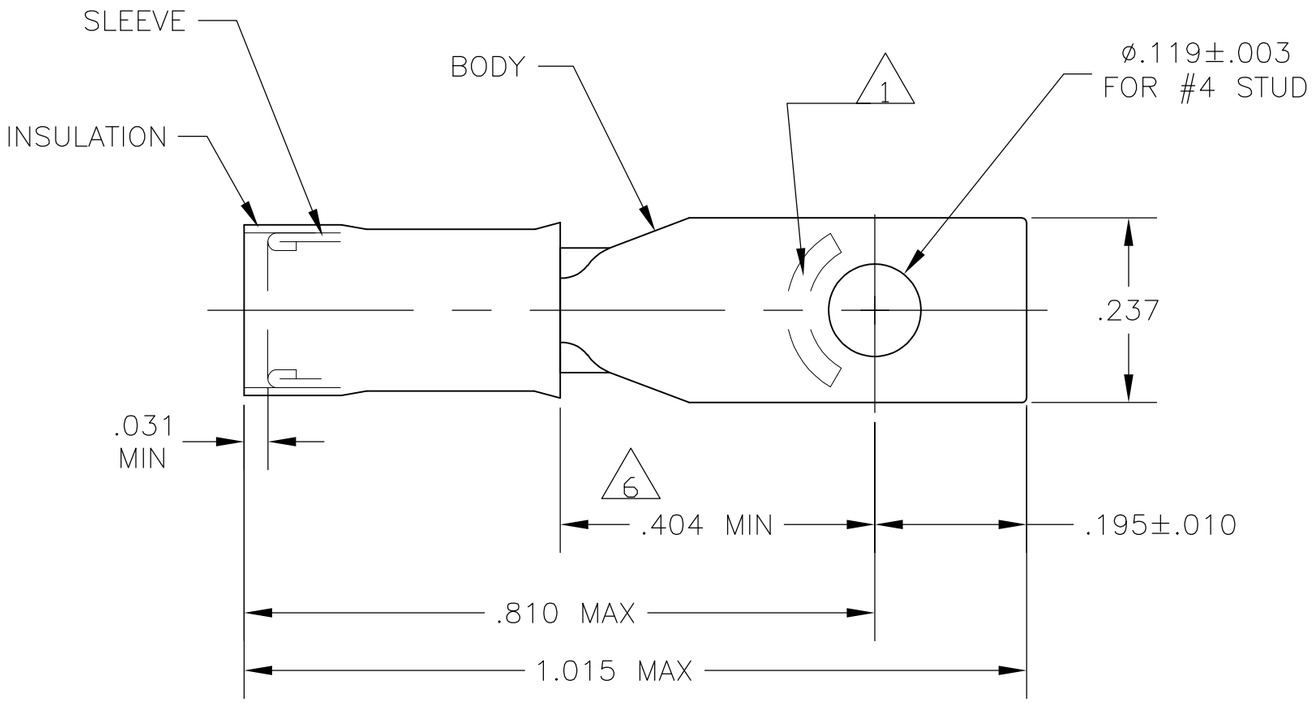

1. STAMP AMP 16-14* APPROX AS SHOWN
2. WIRE INSULATION DIA: 105-.150
3. TONGUE MATERIAL THK: .031±.002
4. BODY & SLEEVE: CU PER ASTM B152
   INSULATION: NYLON PER ASTM D4066
5. BODY & SLEEVE: TIN PLATE .000100 MIN
   EXT THK PER ASTM B545
   INSULATION: COLOR - BLUE
6. APPLIES FROM EDGE OF METAL WIRE BARREL TO CENTER OF STUD HOLE.
7. MEETS MS17143-17, CLASS 1 & 2

QTY	PACKAGE TYPE	PART NO
2500	LOOSE PIECE	7 2-327964-4

CUSTOMER SERVICE SYSTEMS

FOR ADDITIONAL PRODUCT INFORMATION OR COPIES OF DRAWINGS AND TECHNICAL DOCUMENTS	PRODUCT INFORMATION CENTER 1-800-522-6752
FOR APPLICATION TOOLING INFORMATION	TOOLING ASSISTANCE CENTER 1-800-722-1111
FOR ORDER ENTRY	1-800-526-5142

THIS DRAWING IS A CONTROLLED DOCUMENT FOR AMP INCORPORATED. IT IS SUBJECT TO CHANGE AND THE CONTROLLING ENGINEERING ORGANIZATION SHOULD BE CONTACTED FOR THE LATEST REVISION.

MAX RECOMMENDED OPERATING TEMPERATURE: 170°C MAX

VOLTAGE RATING: 300 V MAX

CIRCULAR MIL AREA: 1.04-2.62mm² [2,050-5,180] STRANDED OR SOLID

THIS DRAWING IS A CONTROLLED DOCUMENT.

DIMENSIONS: INCHES

TOLERANCES UNLESS OTHERWISE SPECIFIED:

0 PLC	± -
1 PLC	± -
2 PLC	± -
3 PLC	± .008
4 PLC	± -
ANGLES	± -

MATERIAL - 4

FINISH - 5

DWN	JR RUTH	12JAN10
CHK	T MICHIELUTTI	13JAN10
APVD	T MICHIELUTTI	13JAN10
PRODUCT SPEC	—	
APPLICATION SPEC	—	
WEIGHT	—	

Tyco Electronics

Tyco Electronics Corporation
Harrisburg, Pa 17105-3608

NAME: TERMINAL, RECTANGULAR TONGUE, PIDG
WIRE SIZE: 16-14 AWG

SIZE	CAGE CODE	DRAWING NO	RESTRICTED TO
A3	00779	C-327964	—

CUSTOMER DRAWING

SCALE	SHEET	REV
5:1	1 OF 1	R1