THIS DRAWING IS UNPUBLISHED. RELEASED FOR PUBLICATION - , - .
© COPYRIGHT - By - ALL RIGHTS RESERVED.

LOC	DIST
AD	0

REVISIONS

P	LTR	DESCRIPTION	DATE	DWN	APVD
	A3	REVISED PER ECO-12-017428	28DEC12	HMR	PO

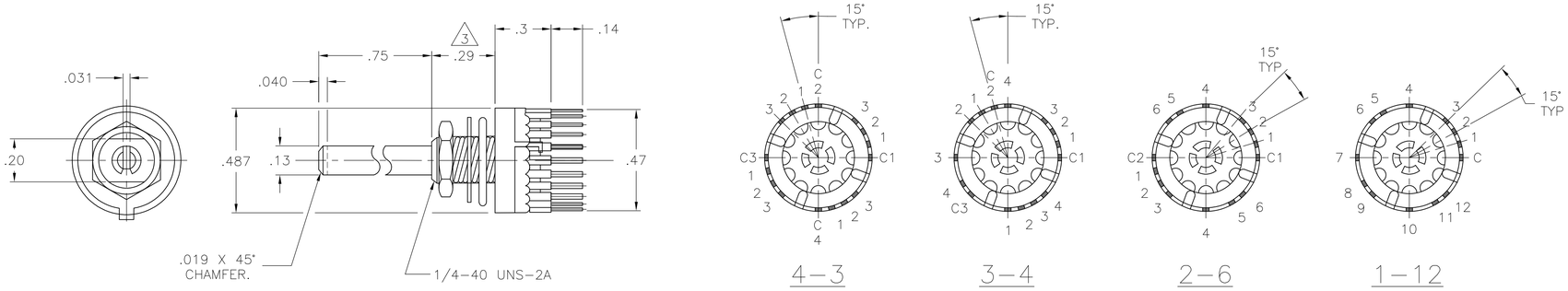

SPECIFICATIONS	
RATING	.4VA MAX. @ 20VDC, OR PEAK AC
TIMING	BREAK BEFORE MAKE
INITIAL CONTACT RESISTANCE	30 MILLIOHMS MAX
INSULATION RESISTANCE	10,000 MEGOHMS MIN
DIELECTRIC WITHSTANDING VOLTAGE	1,000 VRMS AT SEA LEVEL
DURABILITY	10,000 CYCLES @ .4VA RESISTIVE
	30,000 CYCLES @ .1μA 12VDC RESISTIVE
OPERATING FORCE	14 INCH OUNCES
OPERATING TEMPERATURE	-20°C TO +70°C
STORAGE TEMPERATURE	-20°C TO +70°C

1 TERMINAL NUMBERS ARE FOR REFERENCE ONLY AND DO NOT APPEAR ON SWITCHES.

2 ALL MATERIALS AND FINISHES SHALL COMPLY WITH EU DIRECTIVE 2002/95/EC OF 27JAN2003 (ROHS).

3 EACH SWITCH SUPPLIED WITH THE FOLLOWING MOUNTING HARDWARE:
(1) HEX NUTS.
(1) O-RING
(1) INTERNAL TOOTH LOCKWASHER.

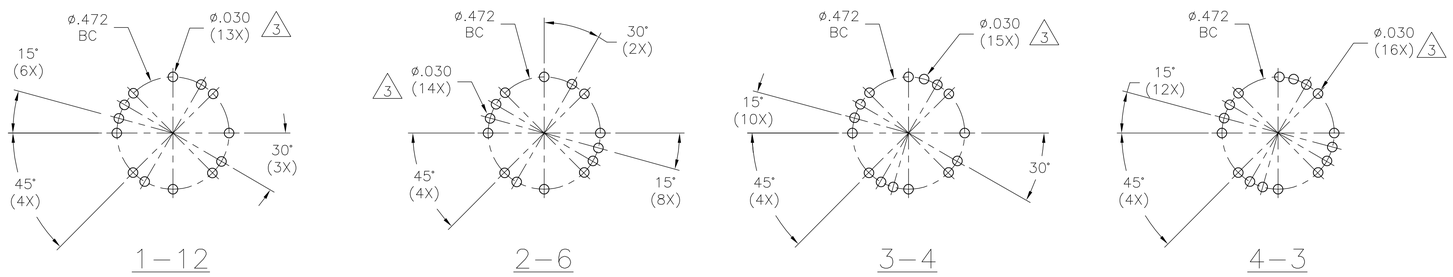

RECOMMENDED PCB HOLE LAYOUTS (VIEWED FROM SHAFT END)
TOLERENCE ±.002. UNLESS OTHERWISE NOTED.

MATERIALS		
COMPONENT NAME	BASE MATERIAL	FINISH
BASE	EPOXY	-
FIXED CONTACT	BRASS	GOLD OVER NICKEL
TERMINALS	BRASS	PRE-TIN OVER NICKEL
MOVEABLE CONTACT	PHOSPHOR BRONZE	GOLD OVER NICKEL
ROTOR	PBT	-
BALL	STEEL	-
SPRING	PIANO WIRE	
STOPPER	STEEL	ZINC
BUSHING	ZINC	NICKEL
SHAFT	BRASS	NICKEL
O-RING	NEOPRENE	-
HEX NUT	BRASS	NICKEL
INTERNAL TOOTH LOCKWASHER	STEEL	ZINC

MOVABLE CONTACT FINISH	FIXED CONTACT FINISH	TERMINAL FINISH	POSITION	POLES	ALCO P/N	PART NUMBER
.00010μ" MIN Au OVER .000120μ"MIN Ni	.00004μ" MIN Au OVER .000070μ"MIN Ni	PRE-TIN OVER NICKEL	3 FIXED	4	MRJE4304	1825537-4
.00010μ" MIN Au OVER .000120μ"MIN Ni	.00004μ" MIN Au OVER .000070μ"MIN Ni	PRE-TIN OVER NICKEL	4 FIXED	3	MRJE3404	1825537-3
.00010μ" MIN Au OVER .000120μ"MIN Ni	.00004μ" MIN Au OVER .000070μ"MIN Ni	PRE-TIN OVER NICKEL	6 FIXED	2	MRJE2604	1825537-2
.00010μ" MIN Au OVER .000120μ"MIN Ni	.00004μ" MIN Au OVER .000070μ"MIN Ni	PRE-TIN OVER NICKEL	12 CONTINUOUS ROTATION	1	MRJE11204	1825537-1

THIS DRAWING IS A CONTROLLED DOCUMENT.

DIMENSIONS: INCHES

TOLERANCES UNLESS OTHERWISE SPECIFIED:
0 PLC ± -
1 PLC ± .01
2 PLC ± .01
3 PLC ± .005
4 PLC ± .0005
ANGLES ± 1°

MATERIAL: SEE SPECIFICATIONS
FINISH: SEE SPECIFICATIONS

DWN A.J. CLAY. 19JUL79
CHK -
APVD -
PRODUCT SPEC -
APPLICATION SPEC -
WEIGHT -

TE Connectivity

NAME: MINIATURE ROTARY SWITCH 12 POS.-30 DEGREE DETENT

SIZE	CAGE CODE	DRAWING NO	RESTRICTED TO
A1	00779	C-1825537	-

CUSTOMER DRAWING | SCALE 3:1 | SHEET 1 OF 1 | REV A3

4805 (3/11)