THIS DRAWING IS UNPUBLISHED. RELEASED FOR PUBLICATION -,- .
© COPYRIGHT - By TYCO ELECTRONICS CORPORATION. ALL RIGHTS RESERVED.

LOC	DIST
AF	50

REVISIONS

P	LTR	DESCRIPTION	DATE	DWN	APVD
	D	REVISE PER ECR-13-013738	15FEB2014	GRZ	JL

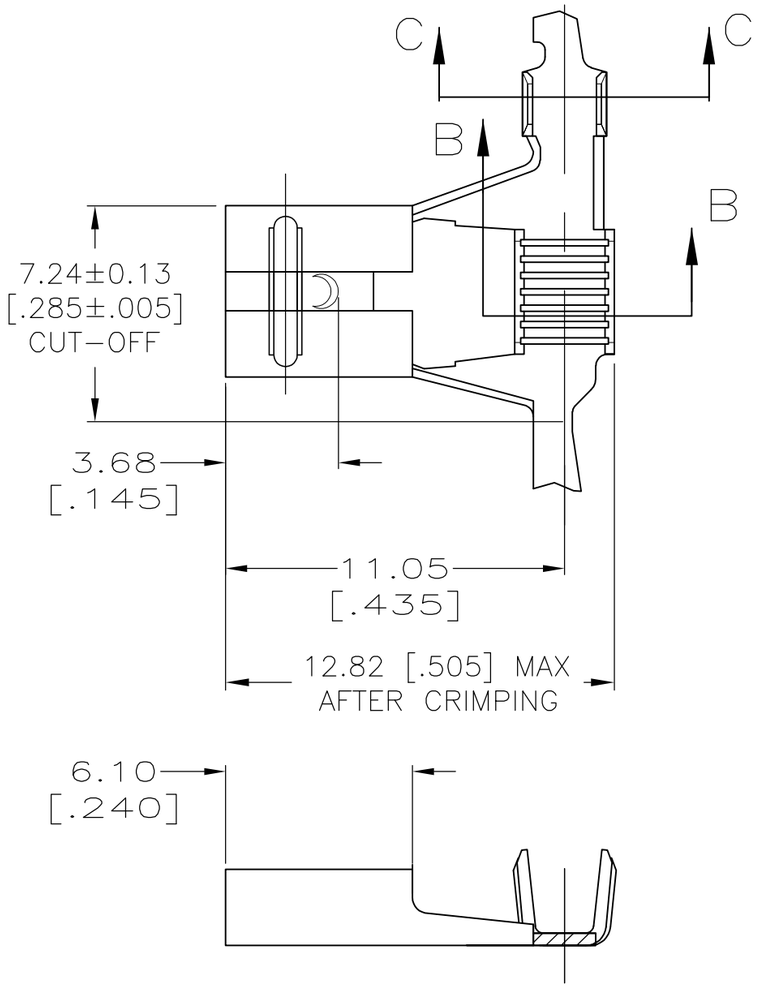

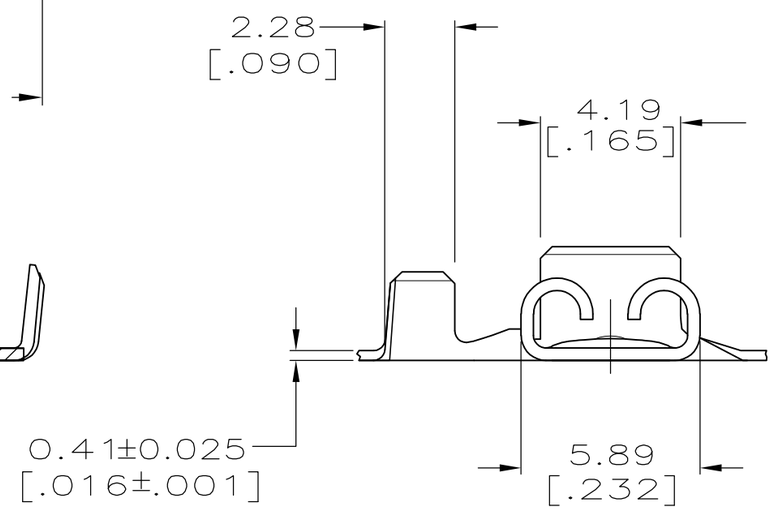

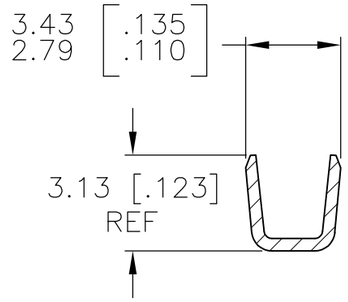

SECTION B-B

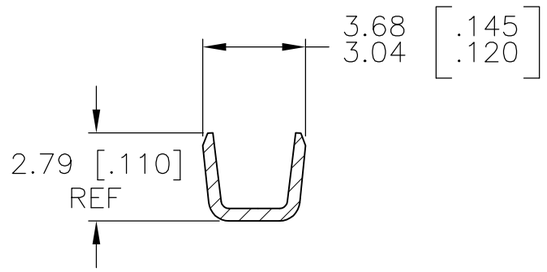

SECTION C-C

1 CONTINUOUS STRIP ON REELS.

2 ACCEPTS MAGNET WIRE RANGES 2000-4050 CMA.

3 MATING TAB THK TO BE 0.81±0.025] [.032±.001].

4 0.002032 [.000080] MIN TIN

1217955-1

PART NO.

THIS DRAWING IS A CONTROLLED DOCUMENT.

DIMENSIONS: mm

TOLERANCES UNLESS OTHERWISE SPECIFIED:

0 PLC	± -
1 PLC	± -
2 PLC	± 0.25 [.010]
3 PLC	± -
4 PLC	± -
ANGLES	± -

MATERIAL: BRASS

FINISH: 4

DWN	JR RUTH	16MAY03
CHK	MS FEHER	16MAY03
APVD	P DESANTIS	16MAY03

PRODUCT SPEC: —

APPLICATION SPEC: —

WEIGHT: —

TE Connectivity

NAME: RECEPTACLE, FASTON, FLAG, AMPLIVAR, 4.75 [.187] SERIES

—

SIZE	CAGE CODE	DRAWING NO	RESTRICTED TO
A3	00779	C-1217955	—

CUSTOMER DRAWING

SCALE	SHEET	REV
5:1	1 OF 1	D