THIS DRAWING IS UNPUBLISHED. RELEASED FOR PUBLICATION - , - .
© COPYRIGHT - By - ALL RIGHTS RESERVED.

| LOC | DIST |
|---|---|
| AD | 00 |

REVISIONS

| P | LTR | DESCRIPTION | DATE | DWN | APVD |
|---|---|---|---|---|---|
| | C6 | REVISED PER ECR-12-010110 | 04JUNE12 | W.W | C.W |

9 OBSOLETE PARTS: OBSOLETE CIS STREAMLINING PER D.RENAUD/D.SINISI

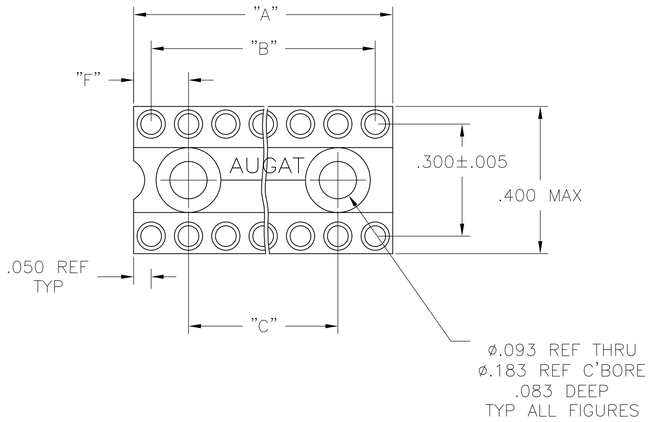


FIG. 1

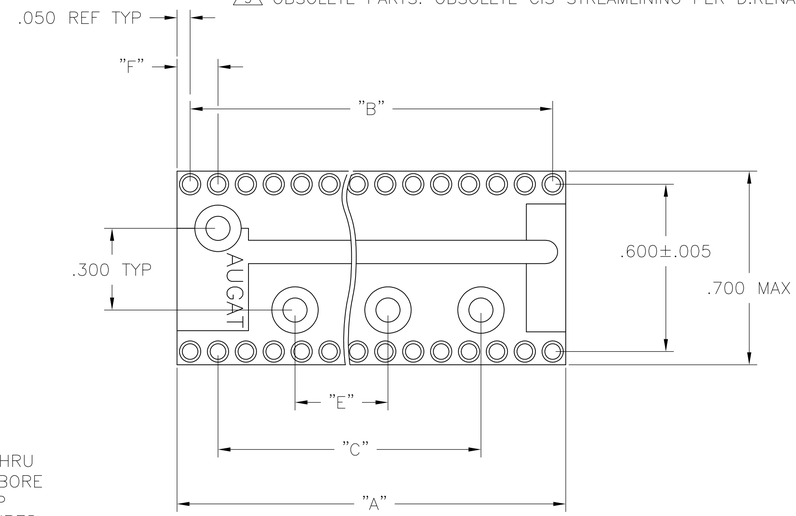


FIG. 2

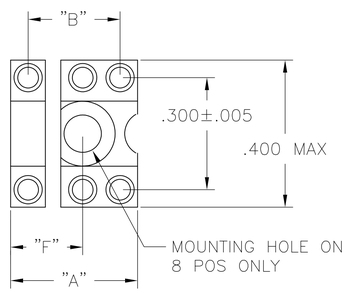


FIG. 3

6 POS MOUNTING HOLE OMITTED

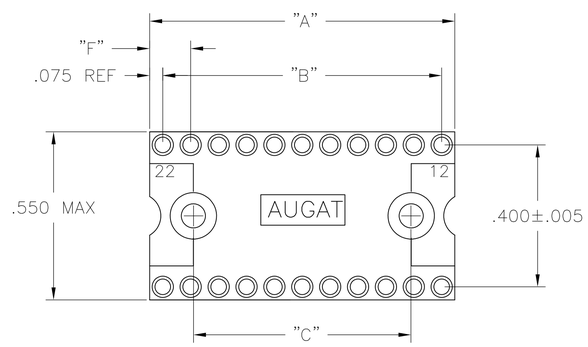


FIG. 4

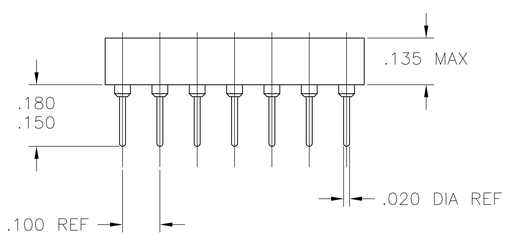


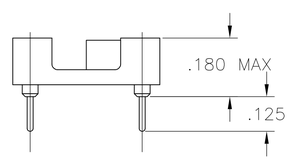


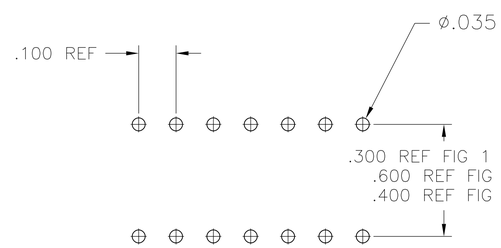


P.C.B. HOLE LAYOUT

TOLERANCE ±.003

1 INSULATOR MATERIAL – THERMOPLASTIC POLYESTER, PCT, BLACK, UL94 V-0.

2 STAMPED CONTACT BECU, PLATED WITH 80-200 µIN THK, TIN, (LEAD FREE) OVER 75-100 µIN THK COPPER.

3 SLEEVE – NICKEL, PLATED WITH 180-340 µIN THK, TIN, (LEAD FREE) OVER 75-100 µIN THK NICKEL.

4 STAMPED CONTACT-BECU, PLATED WITH 25 MIN. GOLD OVER 50-100µIN NICKEL.

5 STAMPED CONTACT-BECU, PLATED WITH GOLD FLASH OVER 50-100µIN NICKEL.

6 ELECTRICAL:
CONTACT RESISTANCE: 10 MILLIOHMS MAX
CONTACT RATING: 3 AMPS
CAPACITANCE: 1.0 pF PER MIL-STD-202, METHOD 305
INSULATION RESISTANCE: 5000 MOHMS MIN @ 500 VDC PER EIA-364-21
DIELECTRIC WITHSTANDING VOLTAGE: 1000 VOLTS (RMS) PER EIA-364-20

7 MECHANICAL:
AFTER INSERTION FORCE: 179 GRAMS AVG
AFTER WITHDRAWAL FORCE: 63 GRAMS AVG
ACCEPTS IC PIN-.009"x.015" THROUGH .011"x.020", OR .016" TO .021" DIAMETER, .150/.105 LONG

8 ENVIRONMENTAL:
OPERATING TEMPERATURE: -55°C TO -105°C

| | FINISH | FIG | F | E | D | C | B | "A" MAX | NO. OF POSN | PART NO. |
|---|---|---|---|---|---|---|---|---|---|---|
| | 3 4 | 4 | .150 | – | – | .900 | 1.100 | 1.200 | 24 | 5-1571551-3 |
| | 3 4 | 2 | .150 | .500 | .900 | 1.500 | 1.900 | 2.000 | 40 | 5-1571551-2 |
| | 3 4 | 2 | .150 | .500 | .900 | 1.500 | 1.700 | 1.800 | 36 | 5-1571551-1 |
| | 3 4 | 2 | .150 | .500 | .900 | – | 1.500 | 1.600 | 32 | 5-1571551-0 |
| | 3 4 | 2 | .150 | .500 | .900 | – | 1.300 | 1.400 | 28 | 4-1571551-9 |
| | 3 4 | 2 | .150 | .500 | .900 | – | 1.100 | 1.200 | 24 | 4-1571551-8 |
| | 3 4 | 4 | .175 | – | – | .800 | 1.000 | 1.150 | 22 | 4-1571551-7 |
| | 3 4 | 1 | .250 | – | – | .500 | .900 | 1.000 | 20 | 4-1571551-6 |
| | 3 4 | 1 | .150 | – | – | .600 | .800 | .900 | 18 | 4-1571551-5 |
| | 3 4 | 1 | .150 | – | – | .500 | .700 | .800 | 16 | 4-1571551-4 |
| | 3 4 | 1 | .150 | – | – | .400 | .600 | .700 | 14 | 4-1571551-3 |
| | 3 4 | 3 | .200 | – | – | – | .300 | .400 | 8 | 4-1571551-2 |
| | 3 4 | 3 | – | – | – | – | .200 | .300 | 6 | 4-1571551-1 |
| | 3 5 | 4 | .150 | – | – | .900 | 1.100 | 1.200 | 24 | 3-1571551-3 |
| | 3 5 | 2 | .150 | .500 | .900 | 1.500 | 1.900 | 2.000 | 40 | 3-1571551-2 |
| | 3 5 | 2 | .150 | .500 | .900 | 1.500 | 1.700 | 1.800 | 36 | 3-1571551-1 |
| | 3 5 | 2 | .150 | .500 | .900 | – | 1.500 | 1.600 | 32 | 3-1571551-0 |
| | 3 5 | 2 | .150 | .500 | .900 | – | 1.300 | 1.400 | 28 | 2-1571551-9 |
| | 3 5 | 2 | .150 | .500 | .900 | – | 1.100 | 1.200 | 24 | 2-1571551-8 |
| | 3 5 | 4 | .175 | – | – | .800 | 1.000 | 1.150 | 22 | 2-1571551-7 |
| | 3 5 | 1 | .250 | – | – | .500 | .900 | 1.000 | 20 | 2-1571551-6 |
| | 3 5 | 1 | .150 | – | – | .600 | .800 | .900 | 18 | 2-1571551-5 |
| | 3 5 | 1 | .150 | – | – | .500 | .300 | .800 | 16 | 2-1571551-4 |
| | 3 5 | 1 | .150 | – | – | .400 | .600 | .700 | 14 | 2-1571551-3 |
| | 3 5 | 3 | .200 | – | – | – | .300 | .400 | 8 | 2-1571551-2 |
| | 3 5 | 3 | – | – | – | – | .200 | .300 | 6 | 2-1571551-1 |
| | 2 3 | 4 | .150 | – | – | .900 | 1.100 | 1.200 | 24 | 1-1571551-3 |
| | 2 3 | 2 | .150 | .500 | .900 | 1.500 | 1.900 | 2.000 | 40 | 1-1571551-2 |
| | 2 3 | 2 | .150 | .500 | .900 | 1.500 | 1.700 | 1.800 | 36 | 1-1571551-1 |
| | 2 3 | 2 | .150 | .500 | .900 | – | 1.500 | 1.600 | 32 | 1-1571551-0 |
| | 2 3 | 2 | .150 | .500 | .900 | – | 1.300 | 1.400 | 28 | 1571551-9 |
| | 2 3 | 2 | .150 | .500 | .900 | – | 1.100 | 1.200 | 24 | 1571551-8 |
| | 2 3 | 4 | .175 | – | – | .800 | 1.000 | 1.150 | 22 | 1571551-7 |
| | 2 3 | 1 | .250 | – | – | .500 | .900 | 1.000 | 20 | 1571551-6 |
| | 2 3 | 1 | .150 | – | – | .600 | .800 | .900 | 18 | 1571551-5 |
| | 2 3 | 1 | .150 | – | – | .500 | .300 | .800 | 16 | 1571551-4 |
| | 2 3 | 1 | .150 | – | – | .400 | .600 | .700 | 14 | 1571551-3 |
| | 2 3 | 3 | .200 | – | – | – | .300 | .400 | 8 | 1571551-2 |
| 9 OBSOLETE | 2 3 | 3 | – | – | – | – | .200 | .300 | 6 | ~~1571551-1~~ |

THIS DRAWING IS A CONTROLLED DOCUMENT.

DIMENSIONS: INCHES

TOLERANCES UNLESS OTHERWISE SPECIFIED:
0 PLC ± –
1 PLC ± –
2 PLC ± –
3 PLC ± .005
4 PLC ± –
ANGLES ± –

MATERIAL –
FINISH –

DWN T.KRAYBILL 08OCT03
CHK K.WRIGHT –
APVD K.WRIGHT –
PRODUCT SPEC –
APPLICATION SPEC –
WEIGHT –

TE Connectivity

NAME
CLOSED FRAME DIP, ECONOMY LEAD FREE
(REF AUGAT 500 SERIES)
ECONOMY (STAMPED CONTACT)

SIZE A1 | CAGE CODE 00779 | DRAWING NO C-1571551 | RESTRICTED TO –

CUSTOMER DRAWING | SCALE 4:1 | SHEET 1 OF 1 | REV C6

4805 (3/11)