THIS DRAWING IS UNPUBLISHED. RELEASED FOR PUBLICATION -,- .
© COPYRIGHT - BY TYCO ELECTRONICS CORPORATION. ALL RIGHTS RESERVED.

LOC	DIST
AD	00

REVISIONS

P	LTR	DESCRIPTION	DATE	DWN	APVD
	H	ECO-07-000908	02JUL07	MB	MS
	H1	REVISED PER ECO-10-000443	24OCT09	KK	AEG

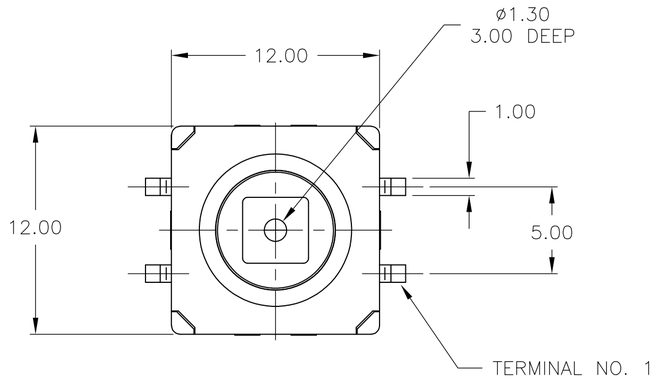

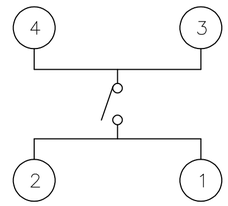

CIRCUIT DIAGRAM

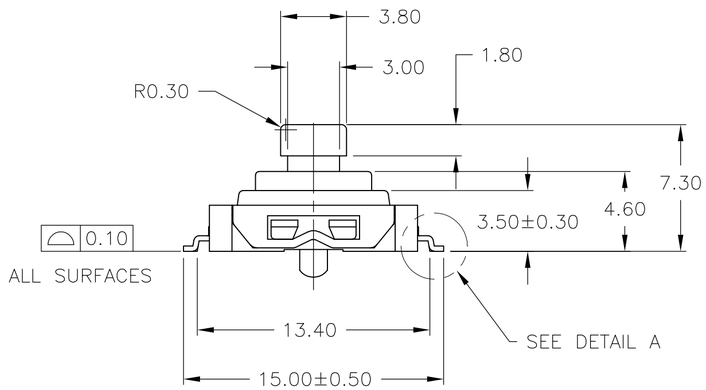

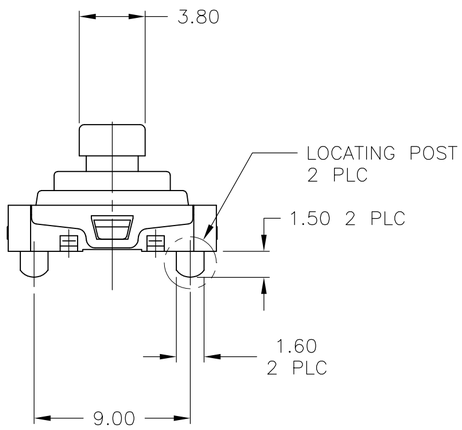

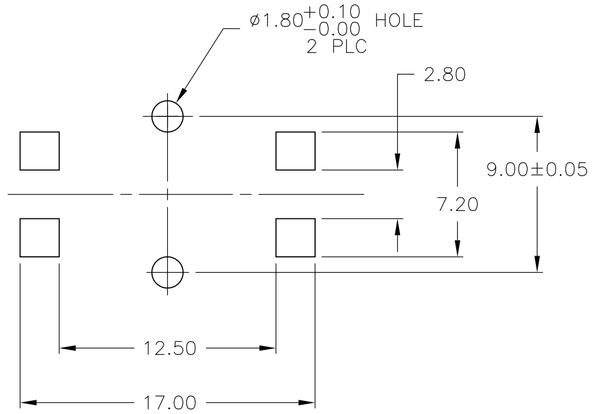

SOLDER PAD DIMENSION

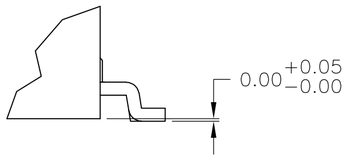

DETAIL A
SCALE 10:1

SPECIFICATIONS

MATERIALS
CASE: THERMOPLASTIC, UL94V-0, BLACK
ACTUATOR: THERMOPLASTIC, UL94V-0, BLACK
COVER: STAINLESS STEEL
SEAL: SILICON RUBBER, BLACK
CONTACT: STAINLESS STEEL, PLATING-SILVER
TERMINAL: BRASS, PLATING-SILVER/NICKEL

ELECTRICAL
MAX CONTACT RATING: 50MILLIAMPS@24V DC
MIN CONTACT RATING: 10MICROAMPS@1V DC
INITIAL CONTACT RESISTANCE: 100 MILLIOHMS MAX, PER EIA RS-448, METHOD 1
INSULATION RESITANCE: 100 MEGOHMS MIN @ 100VDC PER EIA RS-186-13E
DIELECTRIC STRENGTH: 500 VAC
CONTACT BOUNCE: 10 MILLISECOND MAX PER EIA-448-18, METHOD 15

MECHANICAL
ACTUATOR OPERATING FORCE: SEE TABLE
ACTUATOR TRAVEL: 0.35±0.2mm

DURABILITY
UP TO 1,000,000 CYCLES, AT RATED LOAD PER EIA-RS-448, METHOD 8
FINAL CONTACT RESISTANCE: 200 MILLIOHMS MAX
CONTACT BOUNCE: 20 MILLISECONDS MAX
ACTUATOR FORCE: WITHIN ±30% OF INITIAL VALUE

ENVIRONMENTAL
OPERATING TEMPERATURE RANGE: -35°C to +85°C
STORAGE TEMPERATURE RANGE: -35°C to +85°C
HUMIDITY: 96 HOURS PER EIA-186-1E
INSULATION RESISTANCE: 10 MEGOHMS MIN
DIELECTRIC STRENGTH: 250VAC
CONTACT RESISTANCE: 100 MILLIOHMS MAX
DRY HEAT TEST: 85°C FOR 96 HOURS PER IEC 60068-2-2, TEST B,
NO CHANGE IN INITIAL ELECTRICAL AND MECHANICAL CHARACTERISTICS
COLD TEST: -35°C FOR 96 HOURS PER IEC 60068-2-1, TEST A;
NO CHANGE IN INITIAL ELECTRICAL AND MECHANICAL CHARACTERISTICS
THERMAL CYCLING: 5 CYCLES, -35°C to +85°C
HUMIDITY-TEMPERATURE CYCLING, EIA 364-31B, METHOD III
CONTACT RESISTANCE 100 MILLIOHMS MAX
RESISTANCE TO SOLDERING HEAT, PER 109-201 COND B

SOLDERABILITY: PER EIA RS-186-9E

SEALED PER IP67

1. PACKAGE ON TAPE AND REEL PER EIA-481

2. ALL MATERIALS AND FINISHES SHALL COMPLY WITH EU DIRECTIVE 2002/95/EC OF 27JAN2003 (ROHS)

3. OBSOLETE PARTS: OBSOLETE CIS STREAMLINING PER D.RENAUD/D.SINISI

	PACKAGING	OPERATING FORCE	REMARKS	TYCO PART NUMBER
1	TAPE AND REEL	160±70gf	WITH LOCATING POSTS	1571217-4
1	TAPE AND REEL	160±70gf	WITHOUT LOCATING POSTS	1571217-3
3 OBSOLETE	BULK	160±70gf	WITH LOCATING POSTS	~~1571217-2~~
	BULK	160±70gf	WITHOUT LOCATING POSTS	1571217-1

THIS DRAWING IS A CONTROLLED DOCUMENT.

DIMENSIONS: MM

TOLERANCES UNLESS OTHERWISE SPECIFIED:
0 PLC ± -
1 PLC ± -
2 PLC ± 0.30
3 PLC ± -
4 PLC ± -
ANGLES ± -

MATERIAL -
FINISH -

DWN R BROWN 16JAN2002
CHK H WYNKOOP 16JAN02
APVD H WYNKOOP 16JAN02
PRODUCT SPEC —
APPLICATION SPEC —
WEIGHT —

Tyco Electronics
Tyco Electronics Corporation
Harrisburg, PA 17105

NAME
SWITCH ASSEMBLY, TACTILE, 12 X 12, SMT, SEALED

SIZE	CAGE CODE	DRAWING NO	RESTRICTED TO
A2	00779	C-1571217	—

CUSTOMER DRAWING | SCALE 4:1 | SHEET 1 OF 1 | REV H1

1571217