THIS DRAWING IS UNPUBLISHED. RELEASED FOR PUBLICATION -
© COPYRIGHT - BY ALL RIGHTS RESERVED.

LOC	DIST
H	-

REVISIONS

P	LTR	DESCRIPTION	DATE	DWN	APVD
	D1	REVISED PER ECO-11-005294	28APR11	RK	HMR

DIMENSIONS IN mm

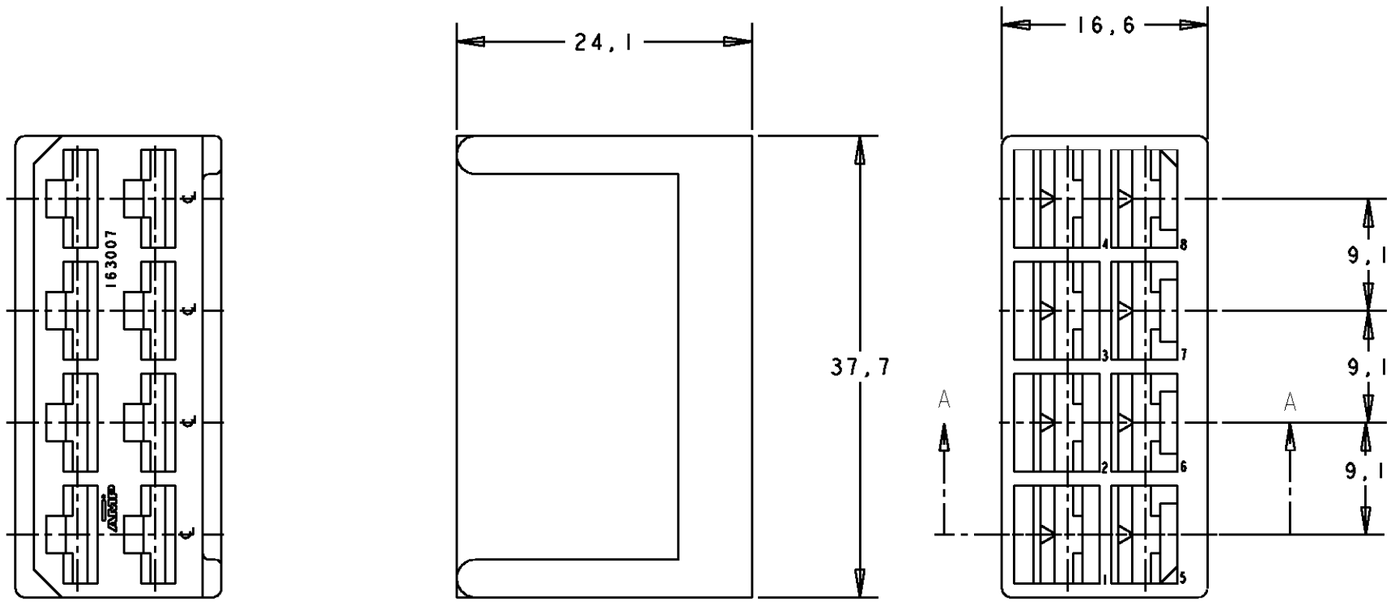

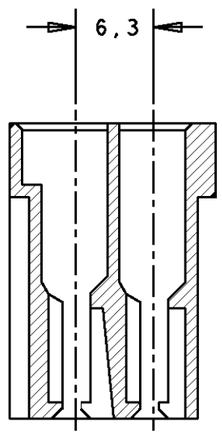

SECTION A-A

THESE VIEWS SHOW THE EXTRA NUMBERING FOR: 1-163007-0

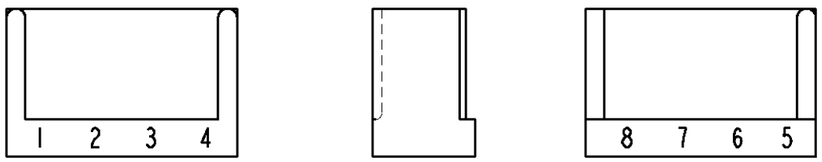

ORDER NO.	COLOUR	MATERIAL
1-163007-0	CLEAR	NYLON ZYTEL 101
163007-9	ORANGE	NYLON ZYTEL 101
163007-8	VIOLET	NYLON ZYTEL 101
163007-7	GREY	NYLON ZYTEL 101
163007-6	BROWN	NYLON ZYTEL 101
163007-5	BLACK	NYLON ZYTEL 101
163007-4	YELLOW	NYLON ZYTEL 101
163007-3	BLUE	NYLON ZYTEL 101
163007-2	GREEN	NYLON ZYTEL 101
163007-1	RED	NYLON ZYTEL 101
163007-0	CLEAR	NYLON ZYTEL 101

DIMENSIONS: mm

TOLERANCES UNLESS OTHERWISE SPECIFIED:
0 PLC ±-
1 PLC ±-
2 PLC ±-
3 PLC ±-
4 PLC ±-
ANGLES ±-

MATERIAL -
FINISH -

DWN RvHEUVEN 14AUG07
CHK MvDRIEL 14AUG07
APVD MvDRIEL 14AUG07
PRODUCT SPEC -
APPLICATION SPEC -
WEIGHT -

TE Connectivity

NAME 8 WAY FASTIN-ON RECEPT. HOUSING

SIZE	CAGE CODE	DRAWING NO	RESTRICTED TO
A3	00779	C-163007	-

CUSTOMER DRAWING | SCALE NTS | SHEET 1 OF 1 | REV D1