THIS DRAWING IS UNPUBLISHED. RELEASED FOR PUBLICATION -,- .
© COPYRIGHT - BY TYCO ELECTRONICS CORPORATION. ALL RIGHTS RESERVED.

LOC	DIST
AA	00

REVISIONS

P	LTR	DESCRIPTION	DATE	DWN	APVD
	B	ECO-07-000390	09JAN08	LAM	JW

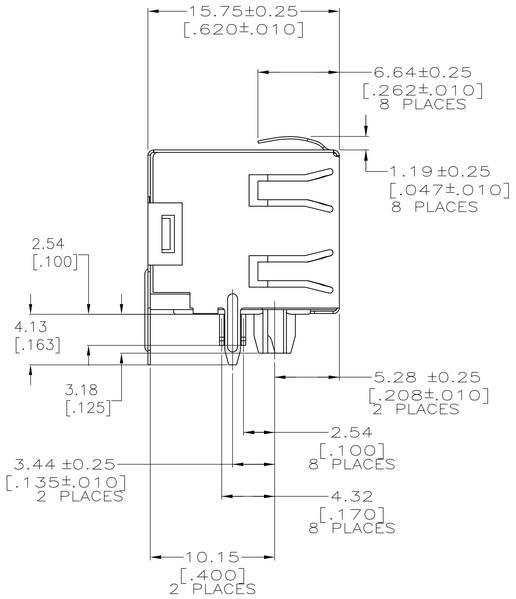

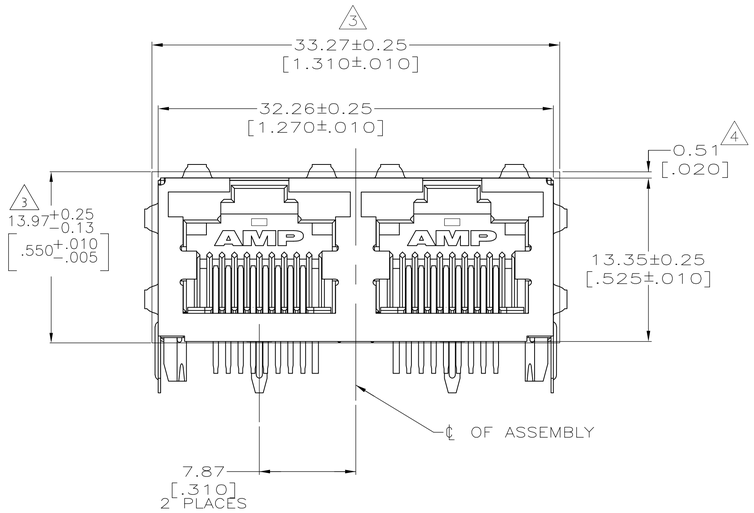

1. MATERIAL: HOUSING – HIGH TEMPERATURE THERMOPLASTIC, COLOR: BLACK, UL94V-0
TERMINALS – 0.36[.014] THICK PHOS BRONZE PLATED WITH 3.81μm[.000150] MINIMUM THICK BRIGHT TIN LEAD IN SOLDER AREA. 1.27μm [.000050] MINIMUM GOLD IN LOCALIZED PLATE AREA. ENTIRE TERMINAL PLATED WITH 1.27μm [.000050] MINIMUM THICK NICKEL.
SHIELD – 0.196[.0077] THICK COPPER ZINC ALLOY PREPLATED WITH 1.27μm[.000050] MINIMUM SATIN NICKEL WITH 2.03μm[.000080] MINIMUM TIN POST DIPPED ON PCB GROUND TABS.

2. JACK CAVITY CONFORMS TO FCC RULES AND REGULATIIONS PART 68, SUBPART F.

3 SUGGESTED PANEL OPENING DIMENSIONS.

4 SUGGESTED CLEARANCE BETWEEN TOP OF CONNECTOR AND TOP PANEL OPENING.

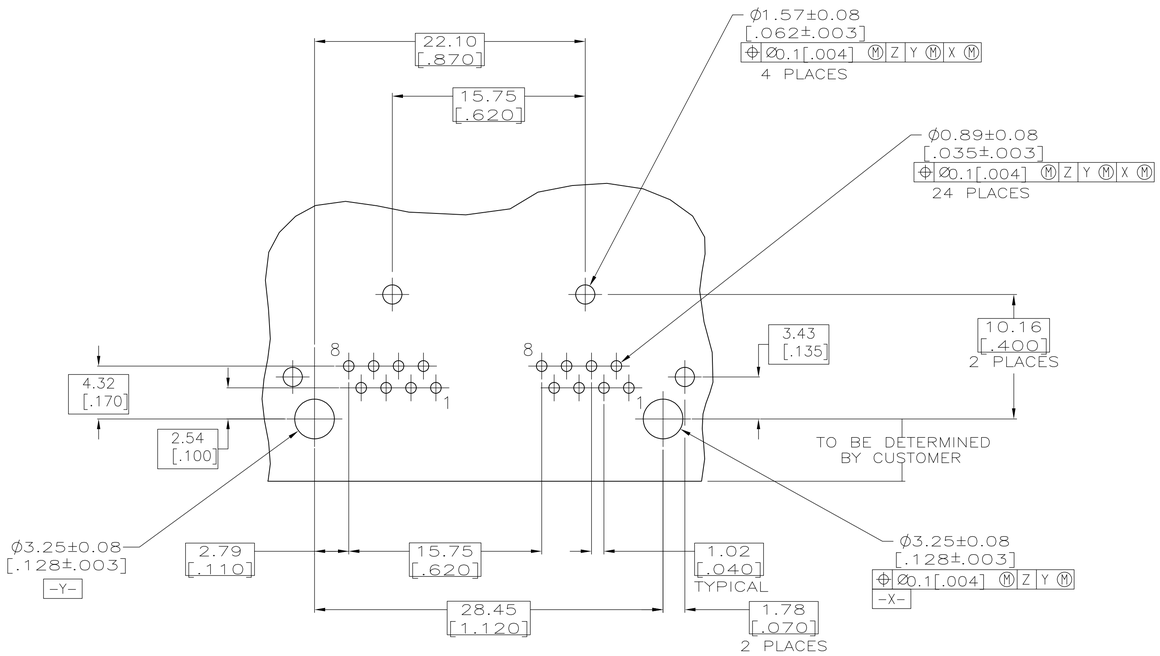

SUGGESTED PRINTED CIRCUIT BOARD LAYOUT
(COMPONENT SIDE)

1116522-1
PART NUMBER

THIS DRAWING IS A CONTROLLED DOCUMENT.

DIMENSIONS: mm [INCHES]

TOLERANCES UNLESS OTHERWISE SPECIFIED:
0 PLC ± –
1 PLC ± –
2 PLC ± 0.25[.01]
3 PLC ± 0.13[.005]
4 PLC ± –
ANGLES ± –

MATERIAL: SEE NOTE 1
FINISH: SEE NOTE 1

DWN DL DRUMMOND 02-FEB-99
CHK DL DRUMMOND 04-FEB-99
APVD EC LAURER 05-FEB-99
PRODUCT SPEC 108-1163-4
APPLICATION SPEC 114-2154
WEIGHT –

Tyco Electronics
Tyco Electronics Corporation
Harrisburg, PA 17105-3608

NAME: INVERTED MODULAR JACK ASSEMBLY, 1X2, SHIELDED, PANEL GROUND
–

SIZE	CAGE CODE	DRAWING NO	RESTRICTED TO
A1	00779	C-1116522	–

CUSTOMER DRAWING
SCALE 4:1 SHEET 1 OF 1 REV B