© – TE Connectivity. All Rights Reserved.

REVISIONS					
P	LTR	DESCRIPTION	DATE	DWN	APVD
	B1	ECO-21-001948	15FEB2021	RR	SZ

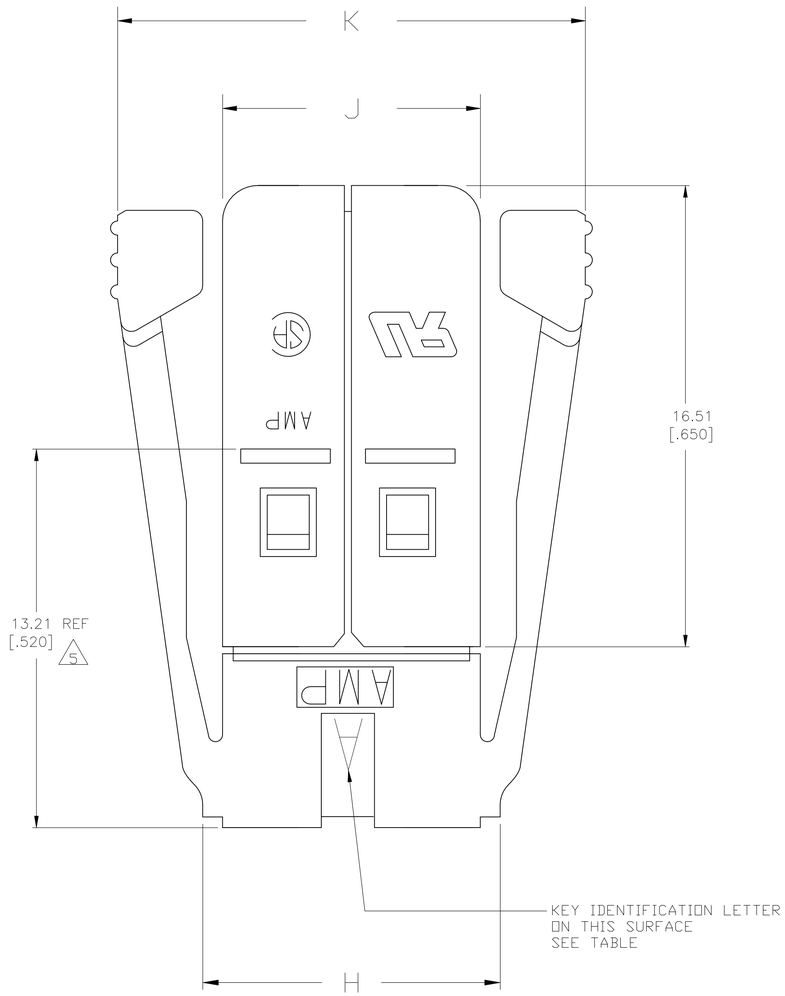

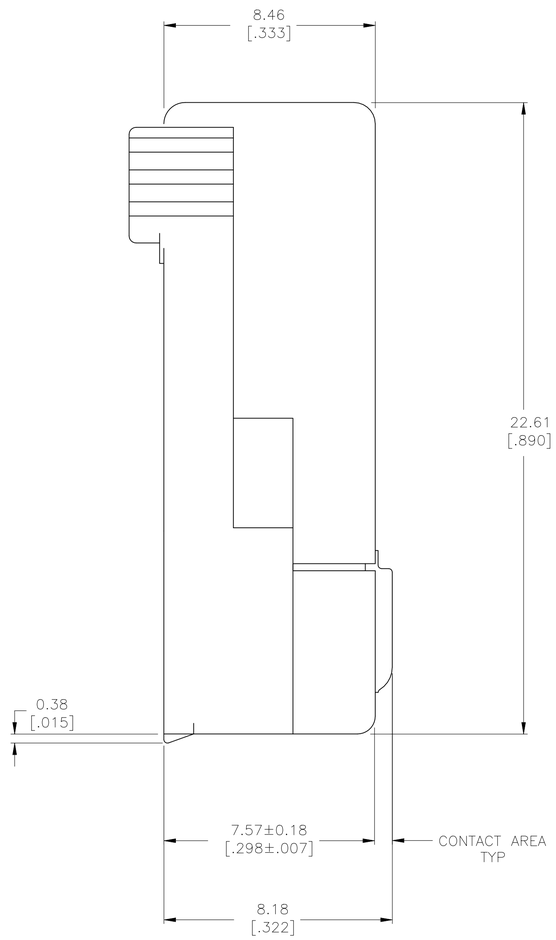

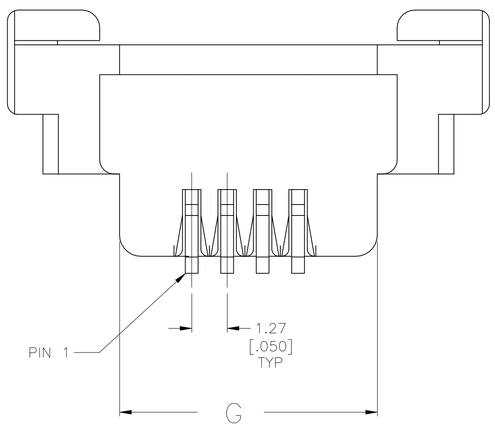

1. PREFIX AND SUFFIX NUMBERS MUST MATCH THOSE ON RECEPTACLE FOR PARTS TO MATE.

2. MATERIAL:
   HOUSING– POLYCARBONATE
   CONTACT– COPPER ALLOY
   SHIELD– BRASS

3. FINISH:
   HOUSING– SMOKE GRAY
   CONTACT– 0.00127[.000050] MIN NICKEL OVER ENTIRE PART,
   0.00002[.000001] GOLD FLASH OVER ENTIRE PART,
   0.00127[.000050] MIN GOLD OVER CONTACT AREA.
   SHIELD: 0.00076[.000030] BRIGHT TIN OVER 0.00127[.000050] MIN NICKEL.

4. CABLES SHOULD MEET AMP DRAWING SPECIFICATIONS 520471–1.

5. INSERTION DEPTH INTO RECEPTACLE.

6. BULK CABLE ARE NOT AVAILABLE FROM AMP INC.

7. CABLES SHOULD MEET AMP DRAWING SPECIFICATIONS 520475–1.

8. CABLES SHOULD MEET AMP DRAWING SPECIFICATIONS 520477–1.

9. CABLES SHOULD MEET AMP DRAWING SPECIFICATIONS 520473–1.

10. FOR TERMINATION OF 24 AWG, 7 STRANDED, FLAT RIBBON CABLE WITH 1.27[.050] NOMINAL O.D. CONDUCTOR INSULATION PER LISTED DRAWING SPECIFICATIONS.

11. OBSOLETE PARTS: OBSOLETE CIS STREAMLINING PER D.RENAUD/D.SINISI

	K	J	H	G	NO OF POSN	KEY I.D. LETTER	PART NO
	32.11 [1.264]	24.76 [.975]	25.70 [1.012]	24.59 [.968]	16	E	8 5–1761184–6
	21.95 [.864]	14.60 [.575]	15.54 [.612]	14.43 [.568]	8	E	7 5–1761184–3
OBSOLETE	19.40 [.764]	12.06 [.475]	13.00 [.512]	11.89 [.468]	6	E	9 5–1761184–2
	16.87 [.664]	9.52 [.375]	10.46 [.412]	9.35 [.368]	4	E	4 5–1761184–1
	16.87 [.664]	9.52 [.375]	10.46 [.412]	9.35 [.368]	4	D	4 4–1761184–1
OBSOLETE	21.95 [.864]	14.60 [.575]	15.54 [.612]	14.43 [.568]	8	C	7 3–1761184–3
11 OBSOLETE	19.40 [.764]	12.06 [.475]	13.00 [.512]	11.89 [.468]	6	C	9 3–1761184–2
	16.87 [.664]	9.52 [.375]	10.46 [.412]	9.35 [.368]	4	C	4 3–1761184–1
OBSOLETE	16.87 [.664]	9.52 [.375]	10.46 [.412]	9.35 [.368]	4	B	4 2–1761184–1
OBSOLETE	32.11 [1.264]	24.76 [.975]	25.70 [1.012]	24.59 [.968]	16	A	8 1–1761184–6
	21.95 [.864]	14.60 [.575]	15.54 [.612]	14.43 [.568]	8	A	7 1–1761184–3
OBSOLETE	19.40 [.764]	12.06 [.475]	13.00 [.512]	11.89 [.468]	6	A	9 1–1761184–2
	16.87 [.664]	9.52 [.375]	10.46 [.412]	9.35 [.368]	4	A	4 1–1761184–1

THIS DRAWING IS A CONTROLLED DOCUMENT.

DIMENSIONS: mm [INCHES]

TOLERANCES, UNLESS OTHERWISE SPECIFIED:
0 PLC ± –
1 PLC ± –
2 PLC ± 0.25 [.010]
3 PLC ± –
4 PLC ± –
ANGLES ± –

MATERIAL 2
FINISH 3

DWN B. MCMASTER 21APR04
CHK C. ROHDE 21APR04
APVD M. WALMSLEY 21APR04
PRODUCT SPEC 108–2047
APPLICATION SPEC 114–2086
WEIGHT 0.000000

TE Connectivity

NAME PLUG ASSY, FLAT CABLE, 50 SERIES, SDL

SIZE A1 | CAGE CODE 00779 | DRAWING NO C–1761184 | RESTRICTED TO –

CUSTOMER DRAWING | SCALE 5:1 | SHEET 1 OF 1 | REV B1

4805 (1/15)