THIS DRAWING IS UNPUBLISHED. RELEASED FOR PUBLICATION - , - .
© COPYRIGHT - By - ALL RIGHTS RESERVED.

LOC	DIST
CM	00

REVISIONS

P	LTR	DESCRIPTION	DATE	DWN	APVD
	Y2	REVISED PER ECR-12-011660	01FEB13	KH	TM

1 PARTS COMPLY TO AMP SOLDERABILITY SPECIFICATION 109-11-3.

3 CONTACT IS PLATED OVERALL WITH 0.00127 [.000050] NICKEL, THEN 0.00076 [.000030] GOLD OVER CONTACT LENGTH INDICATED AND MATTE TIN-LEAD ON SOLDER TAIL END.

4 CIRCUIT IDENTIFICATION CHARACTERS ARE ADJACENT TO THE INDICATED CAVITIES, BUT LOCATION AND ORIENTATION MAY DIFFER FROM PRINT.

5 DIMENSIONS IN BRACKETS ARE IN INCHES.

6 CONTACT IS PLATED OVERALL WITH 0.00127 [.000050] NICKEL, THEN 0.00076 [.000030] GOLD OVER CONTACT LENGTH INDICATED AND MATTE TIN ON SOLDER TAIL END.

7 SUPERSEDED BY 350428-4

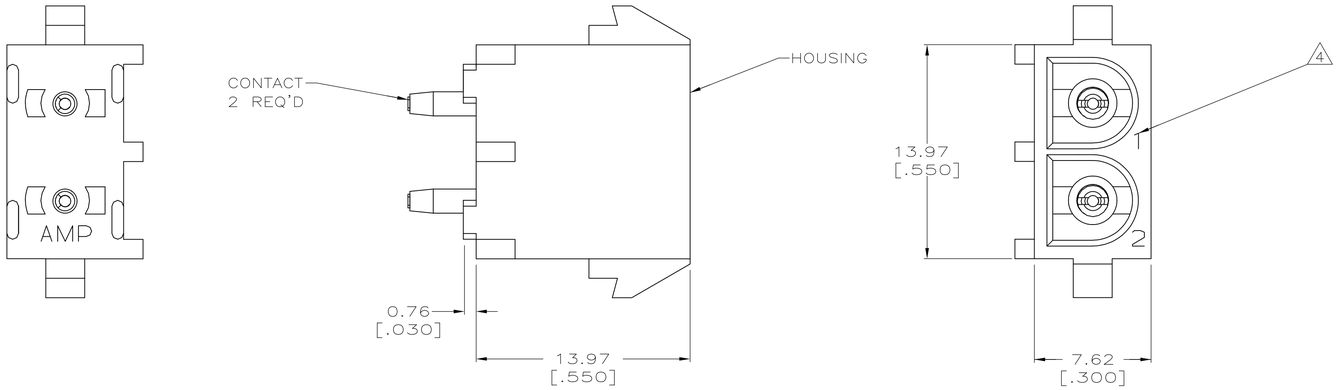

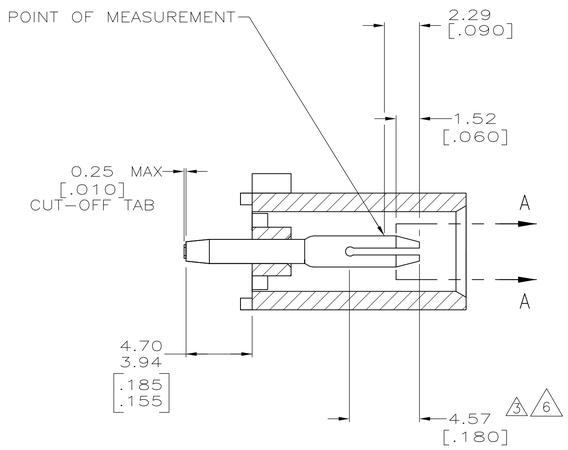

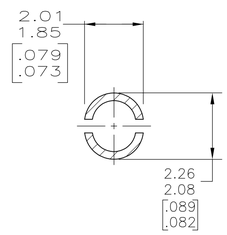

SECTION A-A
SCALE 10:1

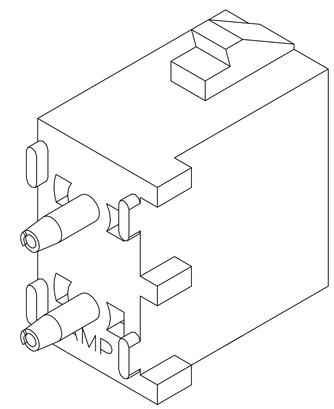

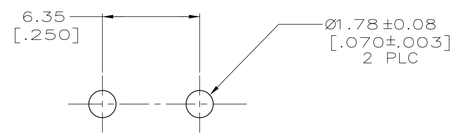

RECOMMENDED MOUNTING HOLE PATTERN
FOR 1.57 [.062] THICK P.C. BOARD

	PIN CONTACT MATERIAL AND FINISH	HOUSING MATERIAL	PART NUMBER
	PHOSPHOR BRONZE, GOLD 6	NYLON, UL94V-2 NATURAL	350428-4
7	PHOSPHOR BRONZE, GOLD 3	NYLON, UL94V-2 NATURAL	350428-2
	PHOSPHOR BRONZE, PRE-TIN	NYLON, UL94V-2 NATURAL	350428-1

THIS DRAWING IS A CONTROLLED DOCUMENT.

DIMENSIONS: mm

TOLERANCES UNLESS OTHERWISE SPECIFIED:
0 PLC ±
1 PLC ±
2 PLC ± 0.13 [.005]
3 PLC ±
4 PLC ±
ANGLES ± 0°30'

MATERIAL: SEE TABLE
FINISH: SEE TABLE

DWN 24JUN2003 S. CARPENTER
CHK 24JUN2003 S. RIDGILL
APVD 24JUN2003 S. RIDGILL
PRODUCT SPEC
APPLICATION SPEC
WEIGHT

TE Connectivity

NAME: PIN HEADER ASSEMBLY, 2 CIRCUIT

SIZE	CAGE CODE	DRAWING NO	RESTRICTED TO
A1	00779	C-350428	—

CUSTOMER DRAWING
SCALE 5:1 SHEET 1 OF 1 REV Y2