THIS DRAWING IS UNPUBLISHED. RELEASED FOR PUBLICATION - ,- .
© COPYRIGHT - BY TYCO ELECTRONICS CORPORATION. ALL INTERNATIONAL RIGHTS RESERVED.

LOC	DIST
GP	00

REVISIONS

P	LTR	DESCRIPTION	DATE	DWN	APVD
	B	REVISED PER ECO-08-014693	18JUN08	JDP	SLB

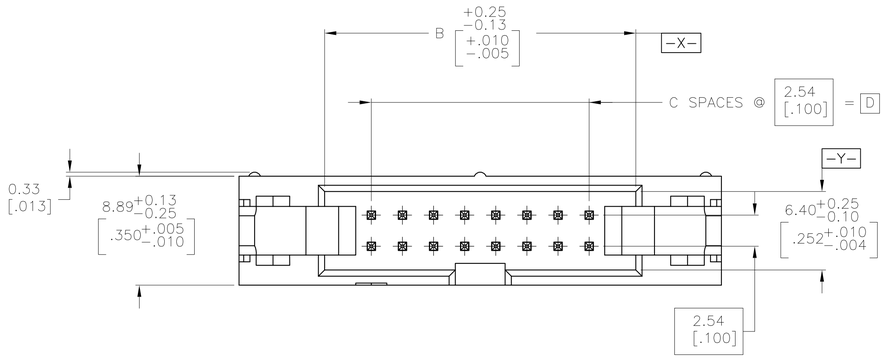

1. HOUSING: PBT, UL94V-0, COLOR BLUE. POSTS: PHOSPHOR BRONZE.
2. POSTS: 0.00076[.000030] MIN GOLD ON MATING AREA, 0.00254[.000100] MIN TIN ON SOLDER END, ALL OVER 0.00127[.000050] MIN NICKEL ON ENTIRE POST.
3. TIN DATUMS S & T TO BE ESTABLISHED BY CUSTOMER.

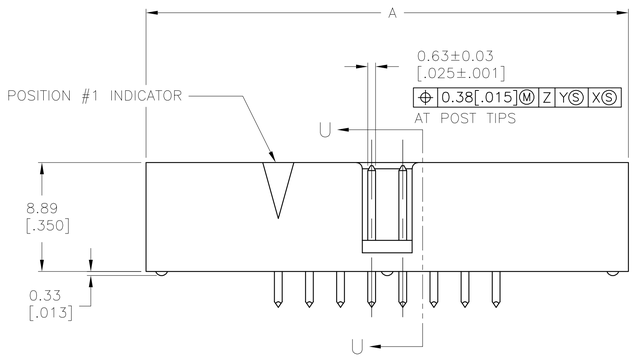

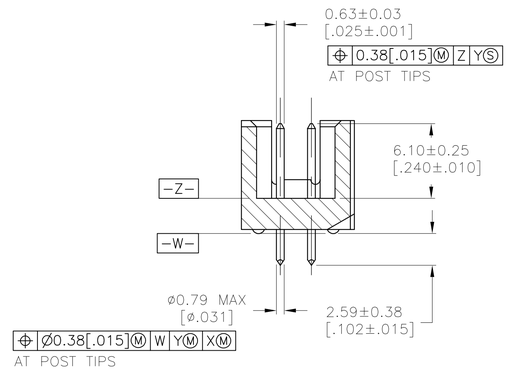

SECTION U–U

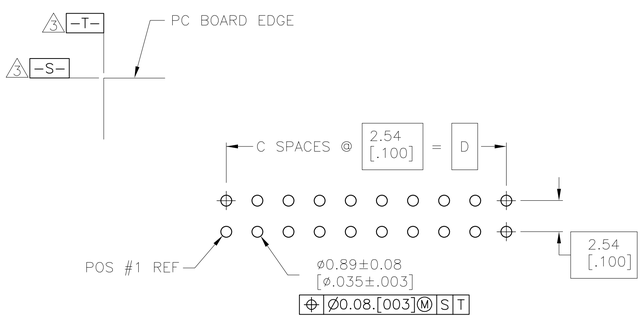

RECOMMENDED PC BOARD LAYOUT
(VIEWED FROM CONNECTOR SIDE)

	D	C	B	A	NO OF POS	PART NUMBER
OBSOLETE	78.74 [3.100]	31	86.36 [3.400]	100.33 [3.950]	64	1-1761693-7
	73.66 [2.900]	29	81.28 [3.200]	95.25 [3.750]	60	1-1761693-6
OBSOLETE	48.26 [1.900]	19	55.88 [2.200]	69.85 [2.750]	40	1-1761693-3
	40.64 [1.600]	16	48.26 [1.900]	62.23 [2.450]	34	1-1761693-1
	27.94 [1.100]	11	35.56 [1.400]	49.53 [1.950]	24	1761693-8
OBSOLETE	22.86 [.900]	9	30.48 [1.200]	44.45 [1.750]	20	1761693-7
OBSOLETE	17.78 [.700]	7	25.40 [1.000]	39.37 [1.550]	16	1761693-6
OBSOLETE	15.24 [.600]	6	22.86 [.900]	36.83 [1.450]	14	1761693-5
	10.16 [.400]	4	17.78 [.700]	31.75 [1.250]	10	1761693-3

THIS DRAWING IS A CONTROLLED DOCUMENT.

DIMENSIONS: mm

TOLERANCES UNLESS OTHERWISE SPECIFIED:
0 PLC ± –
1 PLC ± –
2 PLC ± –
3 PLC ± 0.13[.005]
4 PLC ± –
ANGLES ± –

MATERIAL 1
FINISH 2

DWN B. CRISAMORE/DTI 05JUN05
CHK S.BOLASH 05JUN05
APVD M.WALMSLEY 05JUN05
PRODUCT SPEC —
APPLICATION SPEC —
WEIGHT —

Tyco Electronics
Tyco Electronics Corporation
Harrisburg, PA 17105-3608

NAME HEADER ASSEMBLY, VERTICAL, LOW PROFILE, IDC
—

SIZE	CAGE CODE	DRAWING NO	RESTRICTED TO
A1	00779	C-1761693	—

CUSTOMER DRAWING | SCALE 4:1 | SHEET 1 OF 1 | REV B

4805 (1/08)