EMI Suppression Capacitor, Ceramic Disc, Class X1, 440 V_{AC}, Class Y2, 250 V_{AC}

LINKS TO ADDITIONAL RESOURCES

3D Models

QUICK REFERENCE DATA		
DESCRIPTION	VALUE	
Ceramic Class	2	
Ceramic Dielectric	Y5U	
Voltage (V_{AC})	440	250
Min. Capacitance (pF)	1000	
Max. Capacitance (pF)	12 000	
Mounting	Radial	

OPERATING TEMPERATURE RANGE

-40 °C to +125 °C [1]

Note

[1] For explanation about the difference of operating temperature range and temperature characteristic of capacitance please see www.vishay.com/doc?48299

TEMPERATURE CHARACTERISTICS

Class 2: Y5U

SECTIONAL SPECIFICATIONS

Climatic category (according to EN 60058-1)

Class 2: 40 / 125 / 21

APPROVALS

IEC 60384-14

UL 60384-14

DIN EN 60384-14

CSA E60384-14

FEATURES

- Complying with IEC 60384-14
- High reliability
- Wide range of capacitance values
- Wide range of different leadstyles
- Singlelayer AC disc safety capacitors
- Material categorization: for definitions of compliance please see www.vishay.com/doc?99912

RoHS COMPLIANT

APPLICATIONS

- X1, Y2 according to IEC 60384-14
- Line-to-line filtering (Class X)
- Line-to-ground filtering (Class Y)
- EMI / RFI suppression and filtering
- Primary and secondary coupling (SMPS)

DESIGN

The capacitors consist of ceramic disc both sides of which are silver plated. Connection leads are made of tinned copper having diameters of 0.6 mm.

The capacitors may be supplied with straight or kinked leads having a lead spacing of 5.0 mm or 7.5 mm.

Coating is made of blue colored flame retardant epoxy resin in accordance with UL 94 V-0.

CAPACITANCE RANGE

1.0 nF to 12 nF

TOLERANCE ON CAPACITANCE

± 20 %

RATED VOLTAGE

- X1: 440 V_{AC}, 50 Hz (IEC 60384-14)
  440 V_{AC}, 50 Hz / 60 Hz (US/UL/CSA 60384-14)
- Y2: 250 V_{AC}, 50 Hz (IEC 60384-14)
  250 V_{AC}, 50 Hz / 60 Hz (US/UL/CSA 60384-14)

TEST VOLTAGE

- 2500 V_{AC}, 50 Hz, 2 s Component test (100 %)
- 1500 V_{AC}, 50 Hz, 60 s Random sampling test (destructive)
- 2000 V_{AC}, 60 Hz, 60 s Voltage proof of coating (destructive)

INSULATION RESISTANCE AT 500 V_{DC}

≥ 6000 MΩ (60 s)

DISSIPATION FACTOR

Class 2: max. 2.5 % (1 kHz)

For technical questions, contact: slcap@vishay.com

THIS DOCUMENT IS SUBJECT TO CHANGE WITHOUT NOTICE. THE PRODUCTS DESCRIBED HEREIN AND THIS DOCUMENT ARE SUBJECT TO SPECIFIC DISCLAIMERS, SET FORTH AT www.vishay.com/doc?91000

DIMENSIONS in millimeters

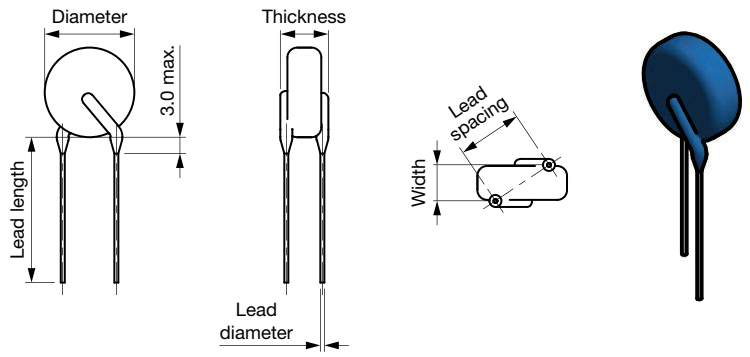

TECHNICAL DATA

CAPACITANCE C (pF)	CAPACITANCE TOLERANCE	BODY DIAMETER $D_{MAX.}$ (mm)	BODY THICKNESS $S_{MAX.}$ (mm)	LEAD SPACING (1) F (mm) ± 1 mm	LEAD DIAMETER (1) d (mm) ± 0.05 mm	WIDTH (1) V (mm) ± 0.5 mm	PART NUMBER MISSING DIGITS SEE ORDERING CODE BELOW
Y5U							
1000	± 20 %	6.5	4.5	5.0	0.6	1.4	WYO102#CM###KR
1500		8.0					WYO152#CM###KR
1800		8.0					WYO182#CM###KR
2200		9.0					WYO222#CM###KR
2500		9.0					WYO252#CM###KR
3300		11.0		7.5			WYO332#CM###KR
4700		12.5					WYO472#CM###KR
5000		12.5					WYO502#CM###KR
6800		17.0				1.6	WYO682#CM###KR
8200		17.0					WYO822#CM###KR
10 000		21.0					WYO103#CM###KR
12 000		21.0					WYO123#CM###KR

Note

(1) Standard lead configuration, other lead spacing and diameter available on request

ORDERING CODE

#	7th digit	Capacitance tolerance	± 10 % = K, ± 20 % = M
###	10th to 12th digit	Lead configuration	See “General Information” www.vishay.com/doc?22001

Example	**WYO**	**103**	**M**	**CM**	**CF0**	**K**	**R**
	Series	Capacitance value	Tolerance code	Voltage code	Lead configuration	Internal code	RoHS compliant

STANDARD EXAMPLE FOR MARKING

WYO 1.0 nF to 2.5 nF

WYO 3.3 nF to 12 nF

STANDARD EXAMPLE FOR LABEL PRINTING

For technical questions, contact: slcap@vishay.com
THIS DOCUMENT IS SUBJECT TO CHANGE WITHOUT NOTICE. THE PRODUCTS DESCRIBED HEREIN AND THIS DOCUMENT ARE SUBJECT TO SPECIFIC DISCLAIMERS, SET FORTH AT www.vishay.com/doc?91000

APPROVALS				
IEC 60384-14 - Safety tests This approval together with CB test certificate substitutes all national approvals.				
CB Certificate (www.vishay.com/doc?22225)				
Y2-capacitor: CB test certificate:	US-26154-UL	1 nF to 12 nF	250 V_{AC}	
X1-capacitor: CB test certificate:	US-26154-UL	1 nF to 12 nF	440 V_{AC}	
Minimum thickness of insulation: 0.4 mm				
VDE (www.vishay.com/doc?22227)				
Y2-capacitor: VDE marks approval:	133769	1 nF to 12 nF	250 V_{AC}	
X1-capacitor: VDE marks approval:	133769	1 nF to 12 nF	440 V_{AC}	
DIN EN 60384-14 (VDE 0565-1-1)				
Minimum thickness of insulation: 0.4 mm				
Underwriters Laboratories Inc. / Canadian Standards Association (www.vishay.com/doc?22226)				
Y2-capacitor: UL-test certificate:	E183844	1 nF to 12 nF	250 V_{AC}	
X1-capacitor: UL-test certificate:	E183844	1 nF to 12 nF	440 V_{AC}	
UL 60384-14, CSA E60384-14				
Minimum thickness of insulation: 0.4 mm				

AC CURRENT VS. VOLTAGE (typical)

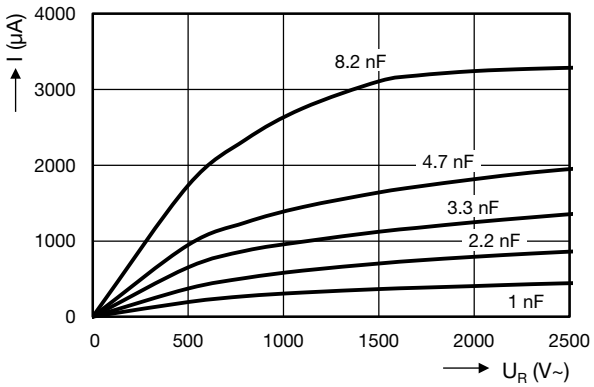

IMPEDANCE VS. FREQUENCY (typical)

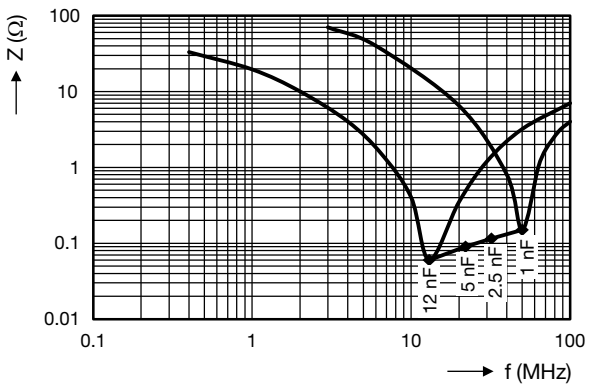

STORAGE

The capacitors must not be stored in a corrosive atmosphere, where sulphide or chloride gas, acid, alkali or salt are present. Exposure of the components to moisture, should be avoided. The solderability of the leads is not affected by storage of up to 24 months (temperature +10 °C to +35 °C, relative humidity up to 60 %). Class 2 ceramic dielectric capacitors are also subject to aging, see www.vishay.com/doc?22001.

SOLDERING

SOLDERING SPECIFICATIONS		
Soldering test for capacitors with wire leads: (according to IEC 60068-2-20, solder bath method)		
	SOLDERABILITY	**RESISTANCE TO SOLDERING HEAT**
Soldering temperature	235 °C ± 5 °C	260 °C ± 5 °C
Soldering duration	2 s ± 0.5 s	10 s ± 1 s
Distance from component body	≥ 2 mm	≥ 5 mm

THIS DOCUMENT IS SUBJECT TO CHANGE WITHOUT NOTICE. THE PRODUCTS DESCRIBED HEREIN AND THIS DOCUMENT ARE SUBJECT TO SPECIFIC DISCLAIMERS, SET FORTH AT www.vishay.com/doc?91000

SOLDERING RECOMMENDATIONS

Soldering of the component should be achieved using a Sn60/40 type or a silver-bearing Sn62/36/2Ag type solder. Ceramic capacitors are very sensitive to rapid changes in temperature (thermal shock) therefore the solder heat resistance specification (see Soldering Specifications table) should not be exceeded. Subjecting the capacitor to excessive heating may result in thermal shocks that can crack the ceramic body. Similarly, excessive heating can cause the internal solder junction to melt.

CLEANING

The components should be cleaned immediately following the soldering operation with vapor degreasers.

SOLVENT RESISTANCE

The coating and marking of the capacitors are resistant to the following test method: IEC 60068-2-45 (method XA).

MOUNTING

If a defined product stop is required for mounting on a PCB, a mechanically formed product stop (kinked or inline wire) or a mounting tool should be used.

We do not recommend modifying the lead terminals, e.g. bending or cropping. This action could break the coating or crack the ceramic insert. If however, the lead must be modified in any way, we recommend support of the lead with a clamping fixture next to the coating.

OPERATING VOLTAGE

In case the voltage is applied to the circuit, starting as well as stopping, may generate irregular voltage for a transit period because of resonance or switching. Be sure to use a capacitor with a rated voltage range that includes these irregular voltages.

OPERATING TEMPERATURE AND SELF-GENERATED HEAT

Keep the surface temperature of a capacitor below the upper limit of its rated operating temperature range. Be sure to take into account the heat generated by the capacitor itself. When the capacitor is used in a high frequency, pulse, or similar application, it may have self-generated heat due to dielectric dissipation.

Temperature increase due to self-generated heating should not exceed 20 °C while operating at an atmosphere temperature of 25 °C.

When measuring, the surface temperature, make sure that the capacitor is not affected by radiant, conductive and convective heat by its surroundings. Excessive heat may lead to thermo-mechanical deterioration of the capacitor's characteristics and reliability.

RELATED DOCUMENTS	
General Information	www.vishay.com/doc?22001
CB Test Certificate	www.vishay.com/doc?22225
VDE Marks Approval	www.vishay.com/doc?22227
UL Test Certificate	www.vishay.com/doc?22226

For technical questions, contact: slcap@vishay.com
THIS DOCUMENT IS SUBJECT TO CHANGE WITHOUT NOTICE. THE PRODUCTS DESCRIBED HEREIN AND THIS DOCUMENT ARE SUBJECT TO SPECIFIC DISCLAIMERS, SET FORTH AT www.vishay.com/doc?91000

Disclaimer

ALL PRODUCT, PRODUCT SPECIFICATIONS AND DATA ARE SUBJECT TO CHANGE WITHOUT NOTICE TO IMPROVE RELIABILITY, FUNCTION OR DESIGN OR OTHERWISE.

Vishay Intertechnology, Inc., its affiliates, agents, and employees, and all persons acting on its or their behalf (collectively, “Vishay”), disclaim any and all liability for any errors, inaccuracies or incompleteness contained in any datasheet or in any other disclosure relating to any product.

Vishay makes no warranty, representation or guarantee regarding the suitability of the products for any particular purpose or the continuing production of any product. To the maximum extent permitted by applicable law, Vishay disclaims (i) any and all liability arising out of the application or use of any product, (ii) any and all liability, including without limitation special, consequential or incidental damages, and (iii) any and all implied warranties, including warranties of fitness for particular purpose, non-infringement and merchantability.

Statements regarding the suitability of products for certain types of applications are based on Vishay's knowledge of typical requirements that are often placed on Vishay products in generic applications. Such statements are not binding statements about the suitability of products for a particular application. It is the customer's responsibility to validate that a particular product with the properties described in the product specification is suitable for use in a particular application. Parameters provided in datasheets and / or specifications may vary in different applications and performance may vary over time. All operating parameters, including typical parameters, must be validated for each customer application by the customer's technical experts. Product specifications do not expand or otherwise modify Vishay's terms and conditions of purchase, including but not limited to the warranty expressed therein.

Hyperlinks included in this datasheet may direct users to third-party websites. These links are provided as a convenience and for informational purposes only. Inclusion of these hyperlinks does not constitute an endorsement or an approval by Vishay of any of the products, services or opinions of the corporation, organization or individual associated with the third-party website. Vishay disclaims any and all liability and bears no responsibility for the accuracy, legality or content of the third-party website or for that of subsequent links.

Vishay products are not designed for use in life-saving or life-sustaining applications or any application in which the failure of the Vishay product could result in personal injury or death unless specifically qualified in writing by Vishay. Customers using or selling Vishay products not expressly indicated for use in such applications do so at their own risk. Please contact authorized Vishay personnel to obtain written terms and conditions regarding products designed for such applications.

No license, express or implied, by estoppel or otherwise, to any intellectual property rights is granted by this document or by any conduct of Vishay. Product names and markings noted herein may be trademarks of their respective owners.

© 2025 VISHAY INTERTECHNOLOGY, INC. ALL RIGHTS RESERVED

THIS DOCUMENT IS SUBJECT TO CHANGE WITHOUT NOTICE. THE PRODUCTS DESCRIBED HEREIN AND THIS DOCUMENT ARE SUBJECT TO SPECIFIC DISCLAIMERS, SET FORTH AT www.vishay.com/doc?91000