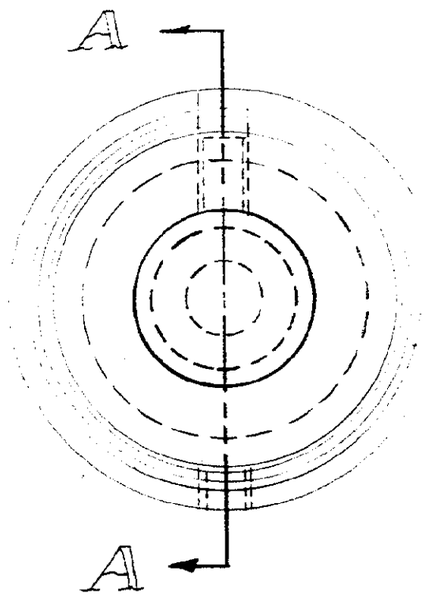

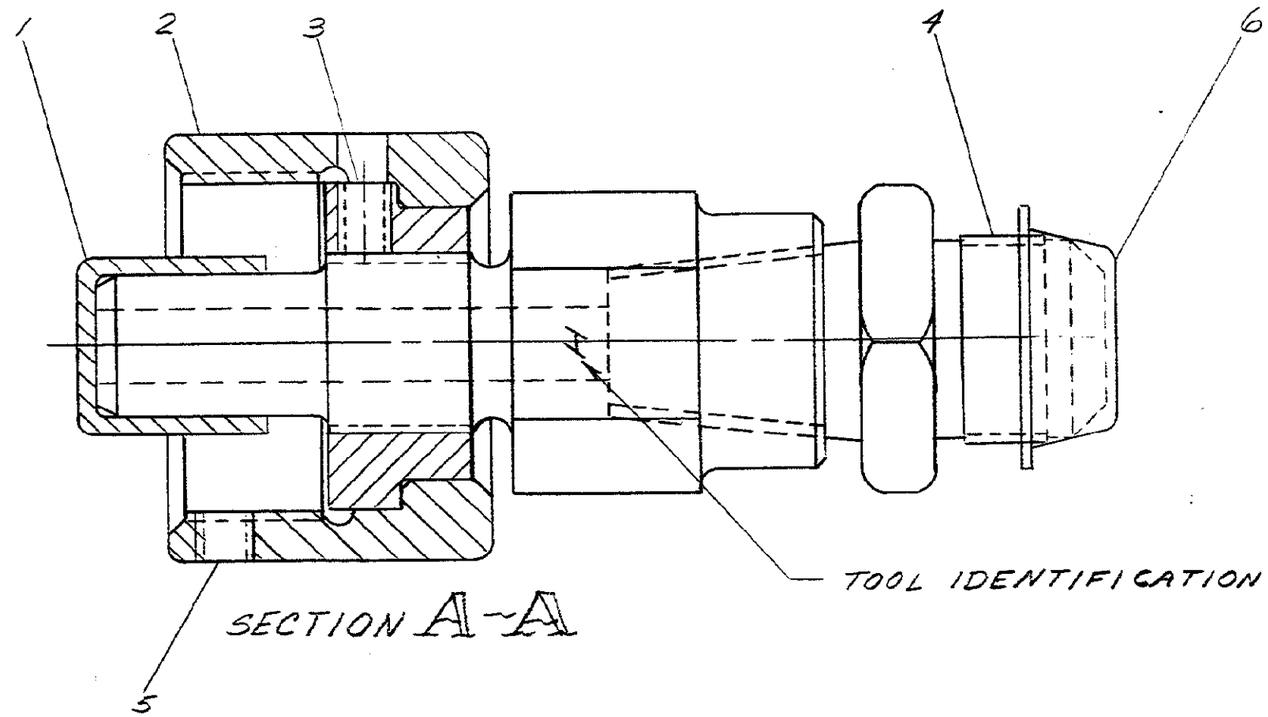

SECTION A-A

1	1-22541-8	CAP PROTECTIVE	6
1	3-21008-9	SCREW (8-32 UNC-3A X .188)	5
1	305118	CONNECTOR - MALE	4
1	21059-2	SCREW	3
1	301721	COLLAR	2
1	302222	PLASTIC CAP	1
DWG QUANTITY	NUMBER	NAME	REMARKS	ITEM NO

REQUIRED PER ASSEMBLY

DESCRIPTION

LTR	REVISION RECORD	DR	CHK	DATE
H-4	REVISED	BWS		9-30-80
H-3	REVISED	B.S.	EJF	1-20-72
H-2	REVISED	B.S.	EJF	12-16-71
H-1	REVISED	PL	EJF	8-26-70
H	REVISED	PL	R	5-14-69

NUMBER 47206

©1969 BY AMP INCORPORATED. ALL RIGHTS RESERVED.
AMP PRODUCTS COVERED BY PATENTS AND/OR PATENTS PENDING.

CUSTOMER COPY REFERENCE ONLY

DR P. Pitt 5-14-69
CHK R. J. Fregney 5-14-69
DE R. J. Fregney 5-14-69

MATERIAL AND FINISH

WIRE — RANGE — INSULATION

TOLERANCE EXCEPT AS NOTED ± .015 ± 1° 0'

SCALE 2-1

AMP INCORPORATED HARRISBURG, PENNA.

CLASS USED ON 69325

TYPE

LOC M B NO 47206 REV H4

NAME COUPLING ASSEMBLY

DIMENSIONS IN INCHES. DO NOT SCALE PRINT.

PRINT DIST 3

AMP 1253 REV 7/68

S

D C B A

8 7 6 5 4 3 2 1