THIS DRAWING IS UNPUBLISHED. RELEASED FOR PUBLICATION -,- .
© COPYRIGHT - By - ALL RIGHTS RESERVED.

LOC	DIST
AF	50

REVISIONS

P	LTR	DESCRIPTION	DATE	DWN	APVD
	D	REVISED PER ECR-13-005733	29AUG2013	KH	PD

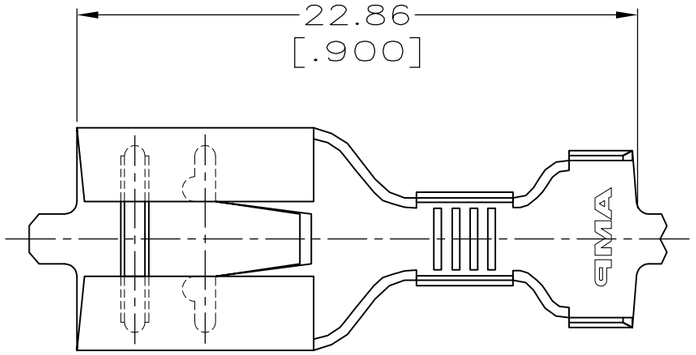

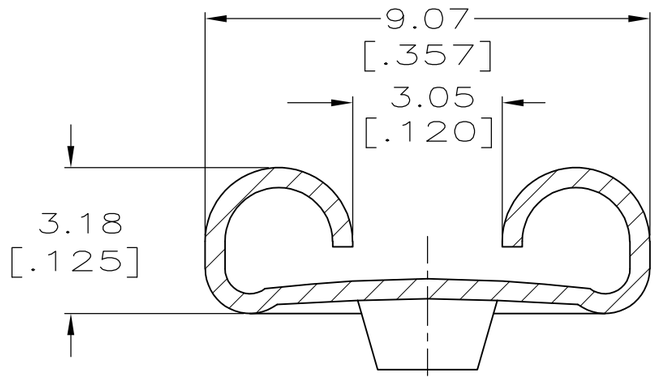

SECTION A–A
SCALE 8:1

1. CONTINUOUS STRIP ON REELS.
2. MATING TAB THK TO BE 0.81 ±0.025 [.032 ±.001].
3. WIRE SIZE IS [#18–#14] AWG.
4. INSULATION RANGE IS 2.29–3.30 [.090–.130] DIA.

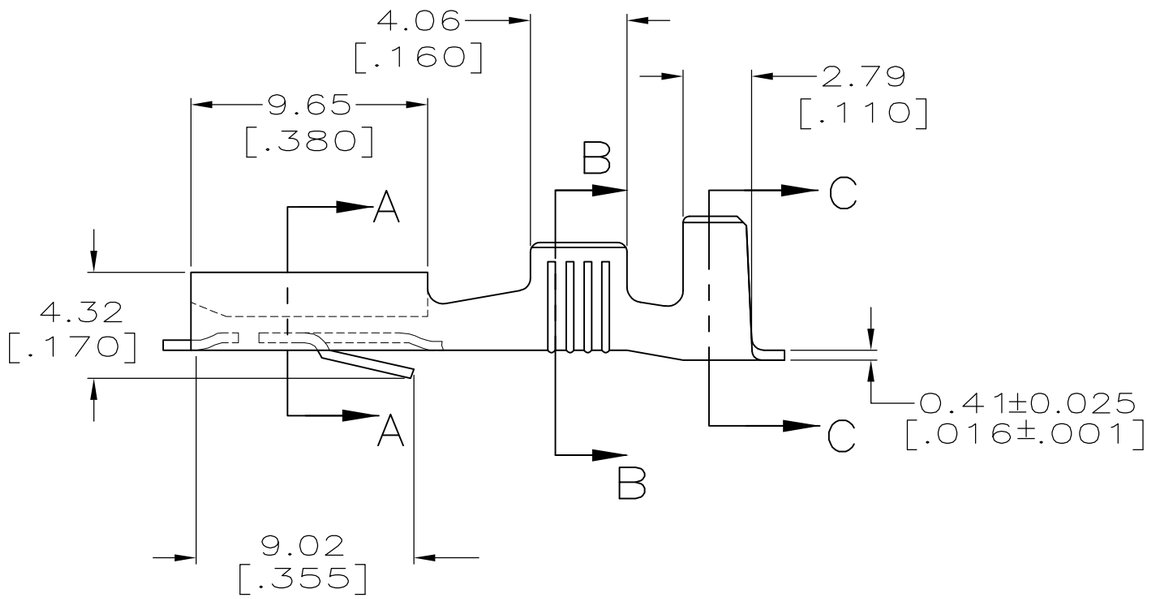

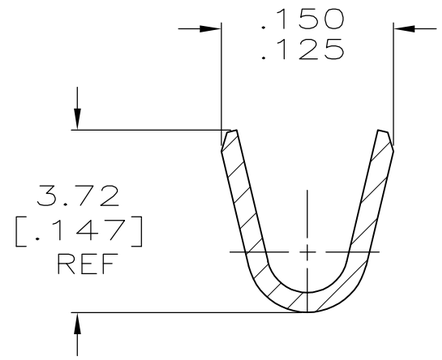

SECTION B–B
SCALE 8:1

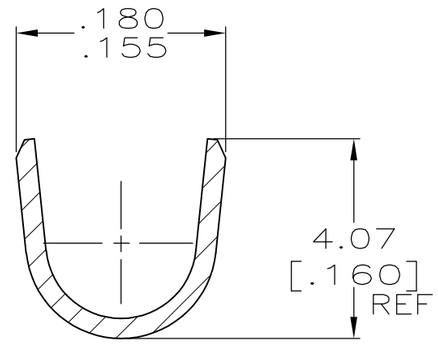

SECTION C–C
SCALE 8:1

62392–1
PART NO.

TYPE	WIDTH	STRIP LENGTH ±0.38 ±[.015]	TYPE	WIDTH	HEIGHT	WIRE
0	3.56 [.140]	5.59 [.220]	F	2.79 [.110]	1.85 [.073]	[#14]
					1.62 [.064]	[#16]
					1.47 [.058]	[#18]
INSUL BARREL CRIMP			WIRE BARREL CRIMP			

THIS DRAWING IS A CONTROLLED DOCUMENT.

DIMENSIONS: mm [INCHES]

TOLERANCES UNLESS OTHERWISE SPECIFIED:

0 PLC	± –
1 PLC	± –
2 PLC	± 0.38 [.015]
3 PLC	± –
4 PLC	± –
ANGLES	± 1°

MATERIAL: BRASS
FINISH: –

DWN	JR RUTH	6/18/97
CHK	MS FEHER	6/18/97
APVD	J GILLESPIE	6/18/97
PRODUCT SPEC	–	
APPLICATION SPEC	114–2065	
WEIGHT	–	

TE Connectivity

NAME: RECEPTACLE, FASTIN–FASTON, 7.92 [.312] SERIES

SIZE	CAGE CODE	DRAWING NO	RESTRICTED TO
A3	00779	C-62392	–

CUSTOMER DRAWING | SCALE 4:1 | SHEET 1 OF 1 | REV D