THIS DRAWING IS UNPUBLISHED. RELEASED FOR PUBLICATION 20
© COPYRIGHT 20 BY - ALL RIGHTS RESERVED.

LOC	DIST
HM	00

REVISIONS

P	LTR	DESCRIPTION	DATE	DWN	APVD
	B	REV; ECO-12-015755	17SEP2012	GG	SH

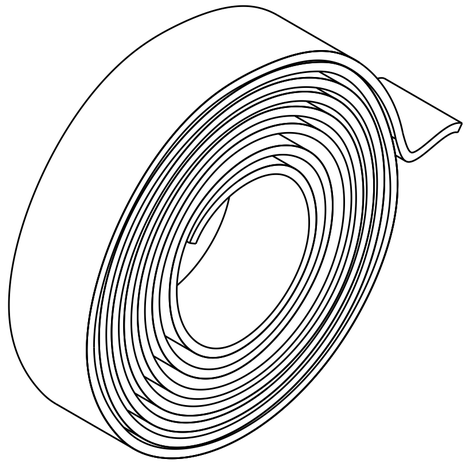

PERFORATED ROLL

1. EACH PART NUMBER INCLUDES 10 INDIVIDUAL UNITS AS SHOWN IN FIGURE A.

2. MATERIAL: HOOK AND LOOP NYLON, SEE TABLE FOR COLORS.

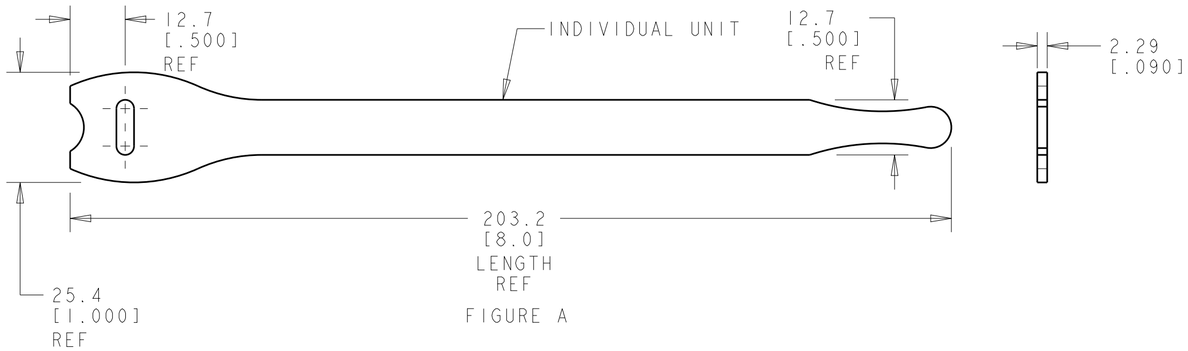

FIGURE A

OBSOLETE	OBSOLETE	OBSOLETE	OBSOLETE		OBSOLETE	OBSOLETE	OBSOLETE				
1	-	-	-	-	-	-	-	-	1-1375274-0	VIOLET	9
-	1	-	-	-	-	-	-	-	1375274-9	GREEN	8
-	-	1	-	-	-	-	-	-	1375274-8	YELLOW	7
-	-	-	1	-	-	-	-	-	1375274-7	RED	6
-	-	-	-	1	-	-	-	-	1375274-6	BLUE	5
-	-	-	-	-	1	-	-	-	1375274-5	ORANGE	4
-	-	-	-	-	-	1	-	-	1375274-4	GRAY	3
-	-	-	-	-	-	-	1	-	1375274-3	WHITE	2
-	-	-	-	-	-	-	-	1	1375274-2	BLACK	1
1--0	-9	-8	-7	-6	-5	-4	-3	-2	PART NUMBER 1	COLOR	ITEM NO.

THIS DRAWING IS A CONTROLLED DOCUMENT.

DIMENSIONS: MM[INCHES]

TOLERANCES UNLESS OTHERWISE SPECIFIED:
0 PLC ±-
1 PLC ±-
2 PLC ±-
3 PLC ±-
4 PLC ±-
ANGLES ±-

MATERIAL 2 -

FINISH -

DWN	L. HALL	20OCT00
CHK	L. SMITH	20OCT00
APVD	S. HERNDON	20OCT00

PRODUCT SPEC -

APPLICATION SPEC -

WEIGHT -

TE Connectivity

NAME HOOK AND LOOP CABLE TIE, 1 INCH X 8 INCH -

SIZE	CAGE CODE	DRAWING NO	RESTRICTED TO
A2	00779	C-1375253	-

Customer Drawing

SCALE 1:1 SHEET 1 OF 1 REV B