PART NUMBER	SML-LXR851SISGC-TR	REV	F

REV	E.C.N. NUMBER AND REVISION COMMENTS	DATE
A	E.C.N. #10865.	05.16.02
B	E.C.N. #10967.	09.07.04
C	E.C.N. #11148.	10.03.08
D	E.C.N. #11710/10BRDR. & REDRAWN.	05.16.11
E	ECN-Lumex201800130	07.15.17
F	ECN-Lumex201800167	11.05.18

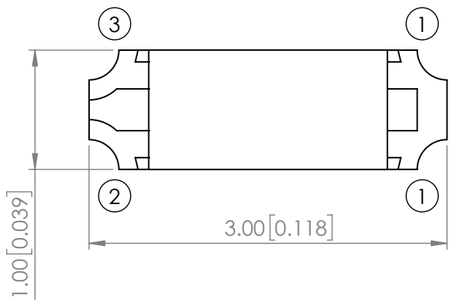

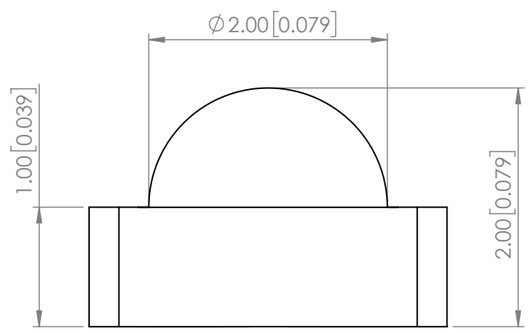

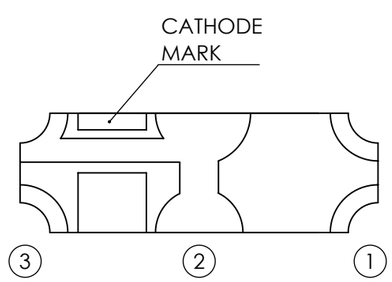

POLARITY

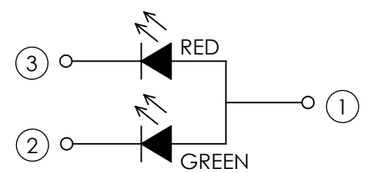

RECOMMENDED SOLDER PAD LAYOUT

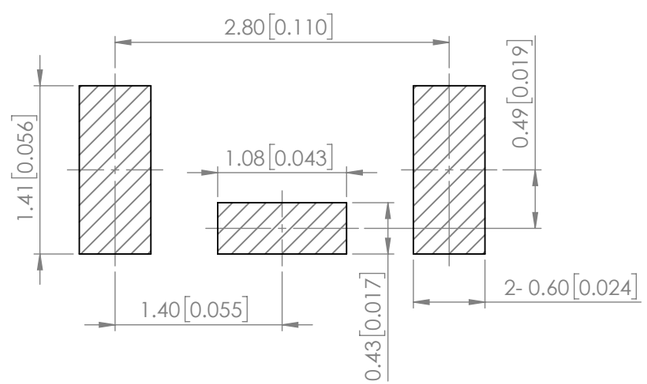

ELECTRO-OPTICAL CHARACTERISTIC TA=25℃

PARAMETER		MIN	TYP	MAX	UNITS	TEST COND
PEAK WAVELENGTH	R	-	630	-	nm	If=20mA
	G	-	570	-		
FORWARD VOLTAGE	R	-	2.0	2.4	Vf	If=20mA
	G	-	2.1	2.4		
REVERSE CURRENT	R	-	-	10	uA	VR=5V
	G	-	-	10		
LUMINOUS INTENSITY	R	-	46	-	mcd	If=20mA
	G	-	16	-		
VIEWING ANGLE		-	120	-	2x theta1/2	-
EMITTED COLOR		RED / GREEN				
EPOXY LENS FINISH		WATER CLEAR				

ABSOLUTE MAXIMUM RATINGS TA=25℃

PARAMETER	MAX	UNITS
PEAK FORWARD CURRENT (R/G)*	60 / 60	mA
FORWARD CURRENT (R/G)	25 / 30	mA
REVERSE VOLTAGE	5	V
POWER DISSIPATION (R/G)	60 / 72	mW
STORAGE TEMPERATURE	-40 TO +90	℃
OPERATING TEMPERATURE	-40 TO +85	℃
SOLDERING TEMPERATURE	3 SEC. MAX @ 260	℃

***t<10us**

MOISTURE SENSITIVE DEVICE
PER JEDEC LEVEL 3 STANDARDS

*UNLESS OTHERWISE SPECIFIED TOLERANCES PER DECIMAL PRECISION ARE: X=±1 (±0.039), X.X=±0.5 (±0.020), X.XX=±0.25 (±0.010), X.XXX=±0.127 (±0.005). LEAD SIZE=±0.05 (±0.002), LEAD LENGTH=±0.75 (±0.030). MIN= +DECIMAL PRECISION -0.00 MAX.= +0.00 -DECIMAL PRECISION

LUMEX® Creating LED and LCD Solutions Together™
425 N. GARY AVE.
CAROL STREAM, IL 60188
PHONE : 800-278-5666
FAX : 630-315-2150
WEB : WWW.LUMEX.COM

3.0(L)*1.0(W)*2.0(H)mm, SURFACE MOUNT SIDE VIEW LED, AlGaInP 630nm RED / GaP 570nm GREEN LED, WATER CLEAR LENS, TAPE & REEL, COMMON ANODE.

****THE SPECIFICATIONS MAY CHANGE AT ANY TIME WITHOUT NOTICE.****

CONFIDENTIAL INFORMATION
THE INFORMATION CONTAINED IN THIS DOCUMENT IS THE PROPERTY OF LUMEX INC. EXCEPT AS SPECIFICALLY AUTHORIZED IN WRITING BY LUMEX INC., THE HOLDER OF THIS DOCUMENT SHALL KEEP ALL INFORMATION CONTAINED HEREIN CONFIDENTIAL AND SHALL PROTECT SAME IN WHOLE OR IN PART FROM DISCLOSURE AND DISSEMINATION TO ALL THIRD PARTIES.

DATE : 2018.07.31	DRAWN BY : C.C.
PAGE : 1 OF 2	CHKD BY : E.C.
SCALE : NTF	APRVD BY : G.Y.
UNIT : mm [INCH]	Pb

PART NUMBER	SML-LXR851SISGC-TR	REV	F

PROFILE

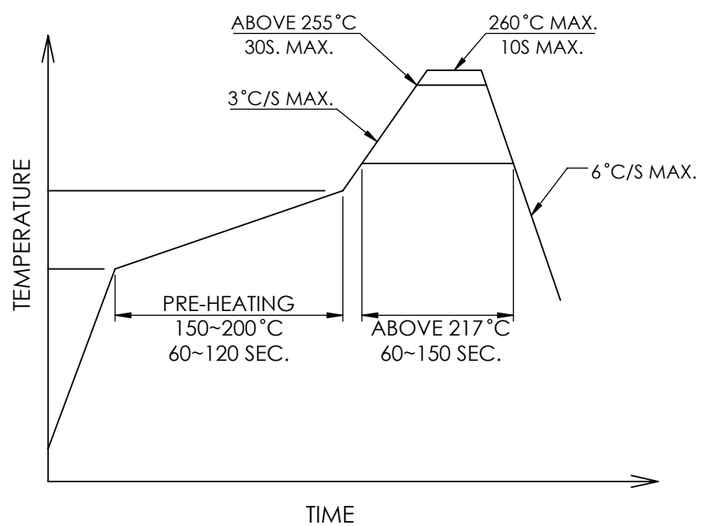

CARRIER TAPE DIMENSION

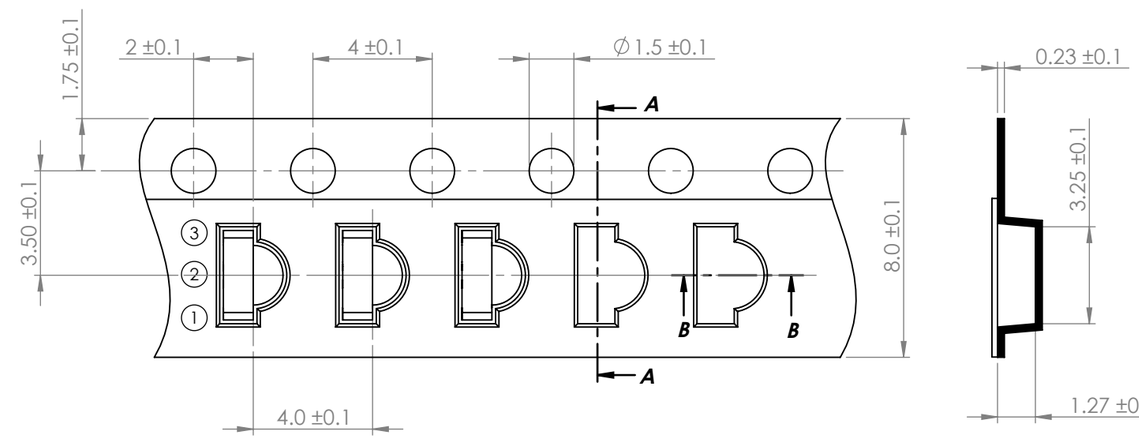

SECTION A-A

SECTION B-B

NOTE:
1. 2000 PCS/REEL

*UNLESS OTHERWISE SPECIFIED TOLERANCES PER DECIMAL PRECISION ARE: X=±1 (±0.039), X.X=±0.5 (±0.020), X.XX=±0.25 (±0.010), X.XXX=±0.127 (±0.005). LEAD SIZE=±0.05 (±0.002), LEAD LENGTH=±0.75 (±0.030). MIN= +DECIMAL PRECISION -0.00 MAX.= +0.00 -DECIMAL PRECISION

LUMEX® Creating LED and LCD Solutions Together™

425 N. GARY AVE.
CAROL STREAM, IL 60188
PHONE : 800-278-5666
FAX : 630-315-2150
WEB : WWW.LUMEX.COM

3.0(L)*1.0(W)*2.0(H)mm, SURFACE MOUNT SIDE VIEW LED, AlGaInP 630nm RED / GaP 570nm GREEN LED, WATER CLEAR LENS, TAPE & REEL, COMMON ANODE.

****THE SPECIFICATIONS MAY CHANGE AT ANY TIME WITHOUT NOTICE.****

CONFIDENTIAL INFORMATION

THE INFORMATION CONTAINED IN THIS DOCUMENT IS THE PROPERTY OF LUMEX INC. EXCEPT AS SPECIFICALLY AUTHORIZED IN WRITING BY LUMEX INC., THE HOLDER OF THIS DOCUMENT SHALL KEEP ALL INFORMATION CONTAINED HEREIN CONFIDENTIAL AND SHALL PROTECT SAME IN WHOLE OR IN PART FROM DISCLOSURE AND DISSEMINATION TO ALL THIRD PARTIES.

DATE : 2018.07.31	DRAWN BY : C.C.
PAGE : 2 OF 2	CHKD BY : E.C.
SCALE : NTF	APRVD BY : G.Y.
UNIT : mm [INCH]	Pb