THIS DRAWING IS UNPUBLISHED. RELEASED FOR PUBLICATION -,- .
© COPYRIGHT - By - ALL RIGHTS RESERVED.

REVISIONS

P	LTR	DESCRIPTION	DATE	DWN	APVD
	D2	REVISED PER ECR-16-007444	30MAY2016	NK	SC

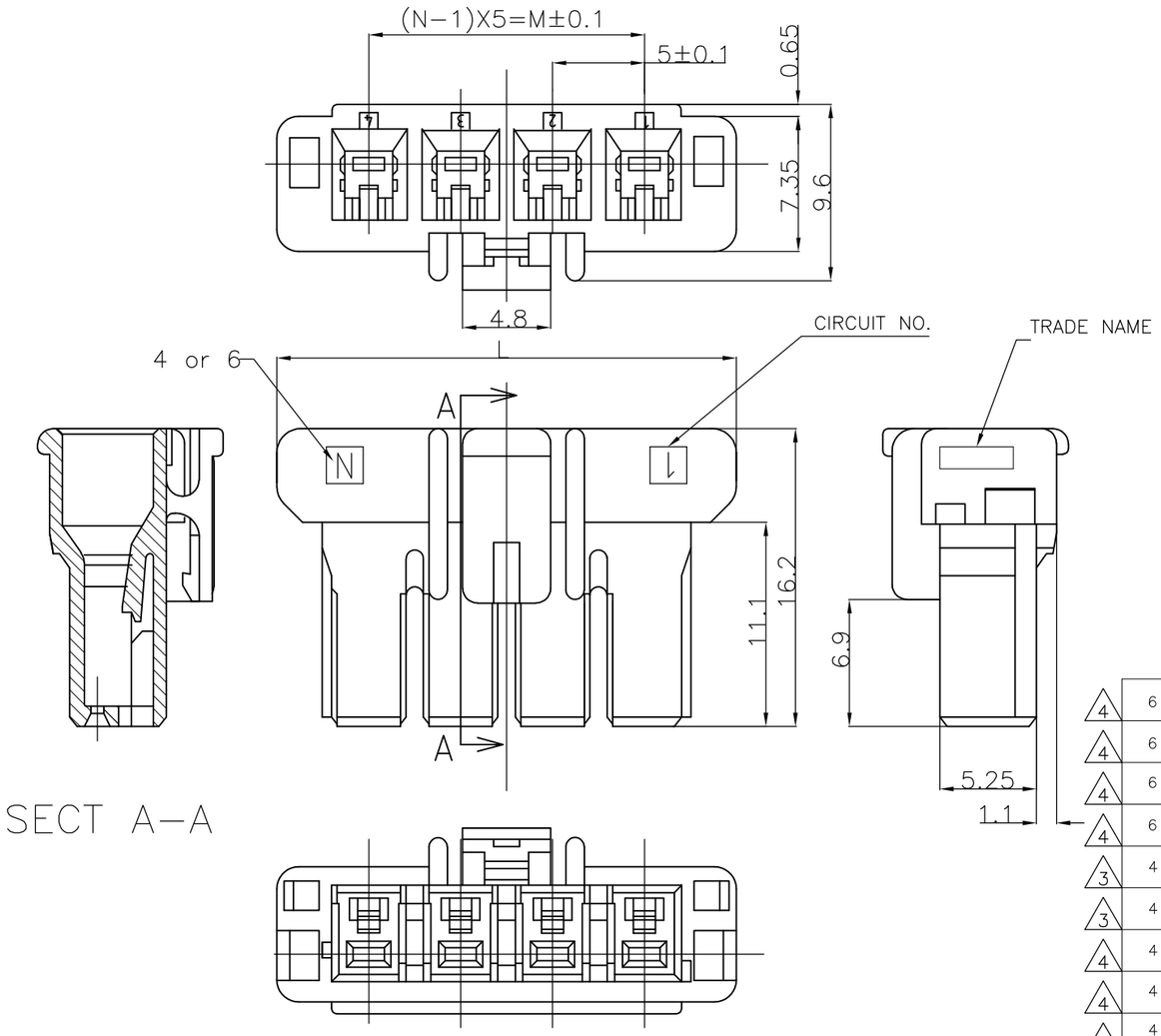

THE TYPE OF KEYING

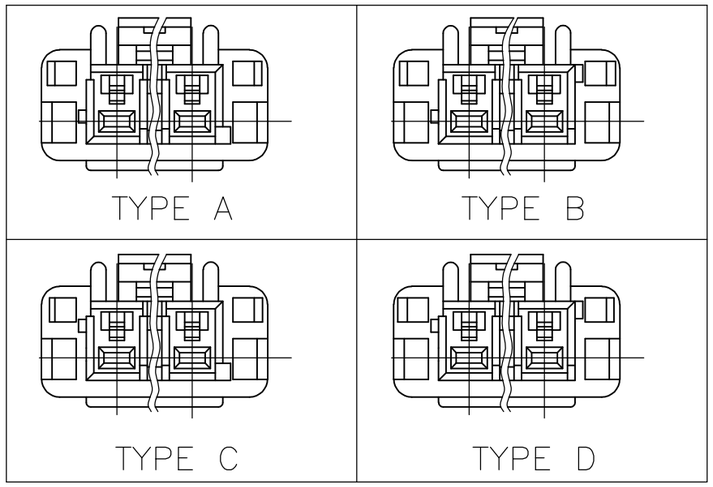

HOSING	6/6 NYLON GRASS FILLED/ NYLON 6
NAME	MATERIAL

	N	M	L	APPLICABLE PLATE. P/N	MATING CONN. P/N	THE TYPE OF KEYING	Color	Pos	PART NO.
	DIMENSION								
4	6	25	35	1376397-1	3-1376385-4	TYPE D	YELLOW	6Pos	3-1376391-4
4	6	25	35	1376397-1	2-1376385-3	TYPE C	BLUE	6Pos	2-1376391-3
4	6	25	35	1376397-1	1-1376385-2	TYPE B	RED	6Pos	1-1376391-2
4	6	25	35	1376397-1	1376385-1	TYPE A	NATURAL	6Pos	1376391-1
3	4	15	25	1376396-1	1-1376384-5	TYPE B	RED	4Pos	1-1376390-5
3	4	15	25	1376396-1	1-1376384-6	TYPE A	NATURAL	4Pos	1376390-5
4	4	15	25	1376396-1	3-1376384-4	TYPE D	YELLOW	4Pos	3-1376390-4
4	4	15	25	1376396-1	2-1376384-3	TYPE C	BLUE	4Pos	2-1376390-3
4	4	15	25	1376396-1	1-1376384-2	TYPE B	RED	4Pos	1-1376390-2
4	4	15	25	1376396-1	1376384-1	TYPE A	NATURAL	4Pos	1376390-1

1 MATING CONN. P/N
HEADER ASS'Y :SEE TABLE
REC CONTACT ;1376347-1,1376348-1

2 PARTS COMPLY WITH GLOW WIRE REQUIREMENT FOR PARTS OF NON-METALLIC MATERIAL SUPPORTING A CURRENT-CARRYING CONNECTION DETAILED IN IEC 60335-1, SECTION 30 (GWT).

3 NYLON 6, GWT, V-2.

4 NYLON 66, GWT, V-0.

THIS DRAWING IS A CONTROLLED DOCUMENT.

DIMENSIONS: mm

TOLERANCES UNLESS OTHERWISE SPECIFIED:
0 PLC ± 0.2
1 PLC ± 0.2
2 PLC ± 0.2
3 PLC ±
4 PLC ±
ANGLES ± 1°

MATERIAL: SEE TABLE
FINISH: SEE TABLE

DWN A.OISHI 31AUG00
CHK Y.KASHIWA 28AUG'00
APVD Y.KASHIWA 28AUG'00
PRODUCT SPEC 108-5699
APPLICATION SPEC 104-5292
WEIGHT

TE Connectivity

NAME: 5.0 POWER KEY CONNECTOR 4P PLUG HOUSING

SIZE A3 | CAGE CODE 00779 | DRAWING NO C-1376390 | RESTRICTED TO —

CUSTOMER DRAWING | SCALE 3:1 | SHEET 1 OF 1 | REV D2