DRAWING MADE IN THIRD ANGLE PROJECTION

/home/us024474/tecmod

PART NUMBER	REV	FIRST USED
1852118-1	A	122500-1
1852118-2	A	565435-5
1852118-3	A	354500-1

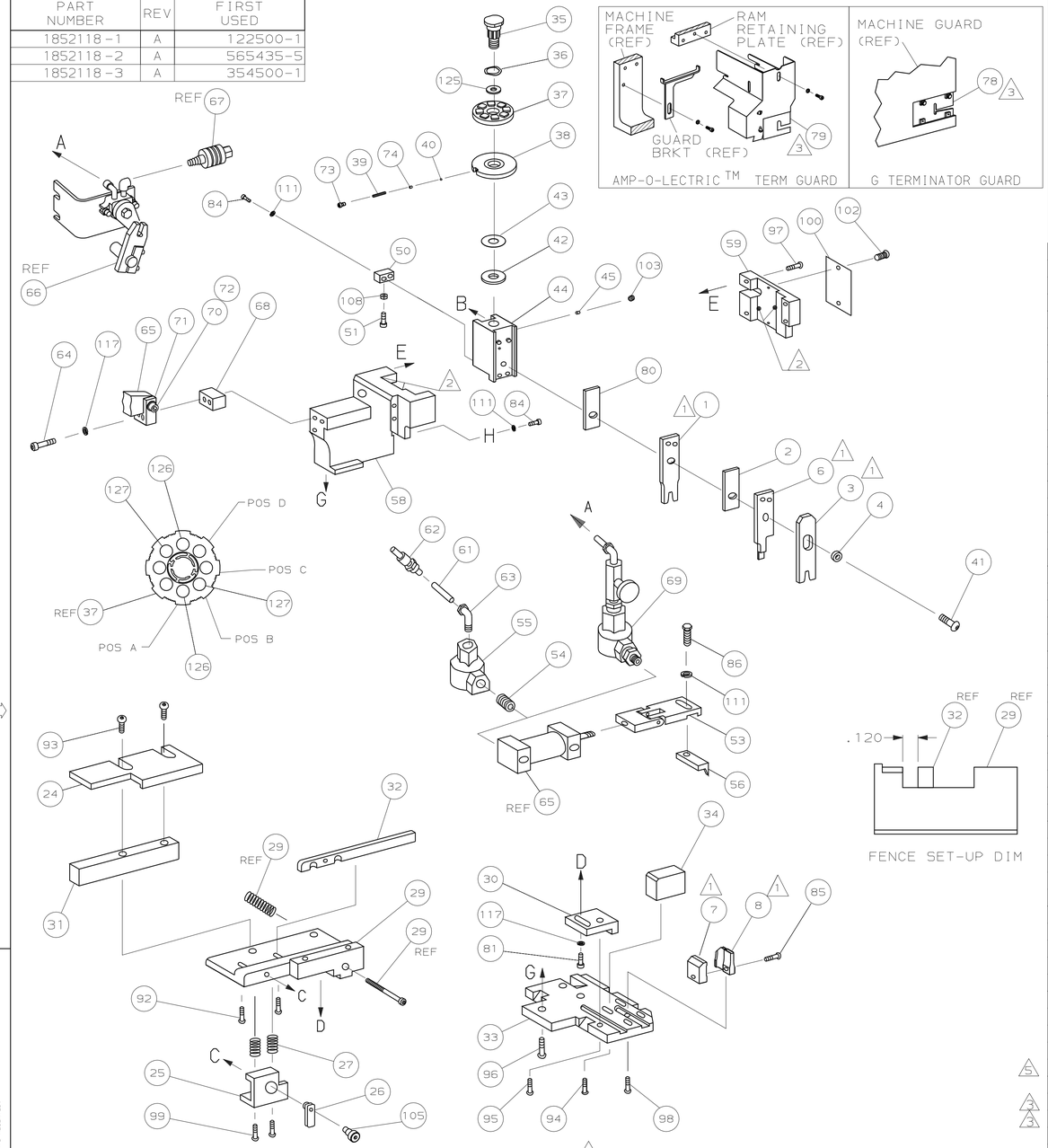

TERMINAL NAME: TERM F PAC/ON III

AMP TERM PN	MFR TERM PN
1572765	12020337

PACKARD TERMINAL AMP CRIMP SPECS

PAD LTR	CRIMP HEIGHT	WIRE SIZE
A	.094 ±.002 [2.39 ±0.05mm]	10 awg
B	.077 ±.002 [1.96 ±0.05mm]	12 awg
C	NOT	USED
D	NOT	USED

CRIMP	SIZE	TYPE	RANGE
WIRE	.145 [3.68mm]	F	12-10 awg
INSUL	.210 [5.33mm]	F	Ø.200 MAX

WIRE STRIP LENGTH	TERM APPL SPEC	⚠6 FEED	APPL INSTRUCTION	SET UP GAGE	LAYOUT
.353-.368	NONE	1.181/1.772	408-8040	458637-1	-

-3	-2	-1	U/M	DWG SIZE	PART NO	DESCRIPTION	ITEM NO
							129
							128
2	2	2	-	C	9-354778-9	PIN, WIRE DISC (.2990)B	127
2	2	2	-	C	6-354778-1	PIN, WIRE DISC (.2800)A	126
1	1	1	-	A	986950-1	WASHER, FLAT PRECISION	125
1	1	1	-	A	217238-1	GENERAL INSTRUCTION PACKAGE	124
1	1	1	-	-	4088040	SF APPL INST 408-8040	123
							122
							121
							120
							119
							118
3	3	3	-	A	21024-5	WASHER, LOCK(#10)ADJ BLOCK	117
							116
							115
							114
							113
							112
4	4	4	-	A	21024-4	WASHER,LOCK(#8)STRIPPER	111
							110
							109
1	1	1	-	A	21018-5	NUT,HEX(NO.6)HOLDDOWN	108
							107
							106
1	1	1	-	A	22353-8	SCR,SHLD(Ø.187x.25)DRAG LEVER	105
							104
1	1	1	-	A	21009-2	SCR,SKT SET(1/4-20x.25 LW)RAM	103
2	2	2	-	A	21017-2	SCR,DRIVE(#2x.19)ID PLATE	102
							101
1	1	1	-	B	461264-1	PLATE, IDENTIFICATION	100
2	2	2	-	A	3-21002-0	SCR,BHC(10-32x.88)DRAG	99
1	1	1	-	A	22733-8	SCR,BHC(8-32x.38 LW)ANVIL	98
4	4	4	-	A	2-21002-9	SCR,BHC(10-32x.75)CAP	97
3	3	3	-	A	2-22733-8	SCR,BHC(1/4-20x.62)HSG	96
1	1	1	-	A	2-21002-7	SCR,BHC(10-32x.50)SG ADJ BLK	95
2	2	2	-	A	2-21002-2	SCR,BHC(8-32x.50)TERM H DWN	94
2	2	2	-	A	2-21002-4	SCR,BHC(8-32x.75)R STP GDE	93
2	2	2	-	A	1-21002-4	SCR,BHC(4-40x.38)R STP GDE	92
							91
							90
							89
							88
							87
1	1	1	-	A	2-22603-1	SCR,HEX HD(8-32x.38)FEED FINGER	86
1	1	1	-	A	2-21000-8	SCR,SHC(8-32x.62)SHEAR	85
3	3	3	-	A	2-21000-7	SCR,SHC(8-32x.50)STRIPPER	84
							83
							82
⚠5 1	1	1	-	A	3-21000-4	SCR,SHC(10-32x.38)SG ADJ BL	81
1	1	1	-	C	455888-3	SPACER, CRIMPER	80
⚠3 -	1	-	-	B	462992-7	GUARD ASSY	79
⚠3 REF	-	-	-	B	679532-1	INSERT, GUARD	78
							77
							76
							75
1	1	1	-	A	690603-1	SPRING, ASSIST	74
1	1	1	-	A	23030-1	SCR,SHC(6-32x.25 SL)INS DISC	73
1	1	1	-	A	4-21002-8	SCR,BHC(3/8x1.00)FEED MT	72
1	1	1	-	B	459610-3	MOUNT, FEED BRACKET	71

QTY REQD PER ASSY — PARTS LIST

-1	-2	-3	U/M	DWG SIZE	PART NO	DESCRIPTION	ITEM NO
LEADMAKER	BENCH MODEL K	BENCH MODEL G			AIRFEED	AIRFEED	AIRFEED
1	1	1	-	A	21024-8	WASHER,LOCK(3/8)FEED BRKT	70
⚠4 -	1	-	-	C	692655-5	AIR FEED VALVE ASSY	69
1	1	1	-	A	461690-1	SPACER, AIR FEED	68
-	REF	-	-	A	24042-2	VALVE, SHUT OFF	67
⚠4 -	REF	-	-	C	692655-6	AIR FEED VALVE ASSY	66
⚠4 1	1	1	-	B	461065-2	AIR FEED ASSY (2 INCH)	65
2	2	2	-	A	4-21000-3	SCR,SHC(10-32x2.00)AIR ASSY	64
1	-	1	-	A	980285-2	ELBOW, SWIVEL 1/8 NPT - 1/4 T	63
1	-	1	-	A	23238-1	QUICK DISCONNECT	62
21.00	-	21.00	IN	A	27319-4	TUBING, POLY-FLO Ø.25	61
							60
1	1	1	-	C	454220-1	CAP, RAM	59
1	1	1	-	D	454485-1	HOUSING	58
							57
1	1	1	-	B	4-694433-7	PAWL, FEED	56
1	-	1	-	A	22374-7	VALVE, QUICK EXHAUST	55
1	-	1	-	A	22304-1	NIPPLE, HEX	54
⚠4 1	1	1	-	B	461062-1	FEED FINGER ASSY	53
							52
1	1	1	-	A	811242-2	BUMPER, HOLDDOWN	51
1	1	1	-	A	690753-1	SPACER, TONKER	50
							49
							48
							47
							46
1	1	1	-	A	690191-1	PLUG, NYLON	45
1	1	1	-	C	1-819307-1	RAM	44
1	1	1	-	A	690125-1	WASHER, LAMINATED	43
1	1	1	-	A	690124-1	WASHER, RAM	42
1	1	1	-	A	690686-2	BOLT, CRIMPER(5/16x1.00)	41
1	1	1	-	A	23241-6	BALL, STEEL	40
1	1	1	-	A	690170-1	SPRING, COMPRESSION	39
1	1	1	-	C	1-690142-1	DISC, INSULATION	38
1	1	1	-	D	354777-1	DISC, WIRE	37
1	1	1	-	A	22480-5	WASHER, SPRING	36
1	1	1	-	B	690212-1	POST, RAM	35
1	1	1	-	B	690786-3	SUPPORT, TERMINAL	34
1	1	1	-	D	455675-1	PLATE, BASE	33
1	1	1	-	B	189807-9	FENCE	32
1	1	1	-	B	1320908-2	SPACER, STRIP GUIDE	31
1	1	1	-	B	455689-1	BLOCK, STRIP GUIDE ADJ	30
1	1	1	-	C	1633091-6	STRIP GUIDE PLATE ASSY	29
							28
2	2	2	-	A	1-22284-0	SPRING, DRAG	27
1	1	1	-	B	240793-1	LEVER, DRAG RELEASE	26
1	1	1	-	B	1633337-1	DRAG, TERMINAL	25
1	1	1	-	D	1633333-1	GUIDE, STRIP (REAR)	24
							23
-	-	1	-	B	690472-2	STRIPPER	22
							21
							20
1	1	-	-	B	690472-9	STRIPPER	19
							18
							17
							16
							15
							14
							13
							12
							11
							10
							9
⚠1 1	1	1	-	C	1633339-1	ANVIL	8
1	1	1	-	A	1633124-2	PLATE, REAR SHEAR	7
1	1	1	-	B	1633338-1	BLADE, SLUG	6
							5
1	1	1	-	B	238009-1	SPACER, BLOCK CRIMPER	4
⚠1 1	1	1	-	C	8-1213077-6	CRIMPER, INSULATION	3
1	1	1	-	C	455888-9	SPACER, CRIMPER	2
⚠1 1	1	1	-	C	2-1633305-1	CRIMPER, WIRE	1

QTY REQD PER ASSY — PARTS LIST

REVISION OF EACH ASSY NO (WHEN BLANK, USE DWG REVISION)

⚠1 RECOMMENDED SPARE PARTS.

⚠2 GREASE LIGHTLY.

⚠3 GUARD MUST BE IN PLACE WHEN OPERATING APPLICATOR IN A BENCH MACHINE.

⚠4 SEE DRAWING FOR COMPONENTS

⚠5 CUT TO LENGTH AT ASSY

⚠6 ADJUST FEED TO CRIMP EVERY SECOND OR THIRD TERMINAL AS REQUIRED.

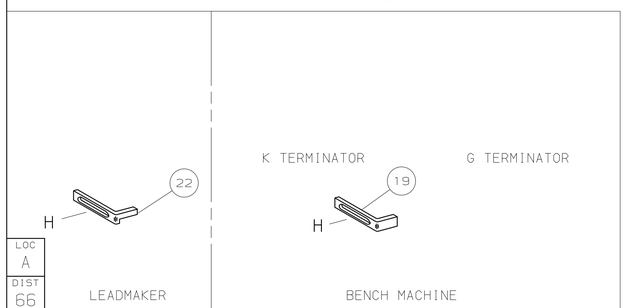

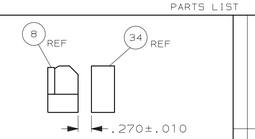

ITEM 34 LOCATION

P	F	LTR	REVISION RECORD	APP	DATE
		A	RELEASED	RK	0CT05

DIMENSIONS IN INCHES. DO NOT SCALE PRINT.
TOLERANCES UNLESS OTHERWISE SPECIFIED:
2 PLC DEC ±.02
3 PLC DEC ±-
4 PLC DEC ±-
ANGLES ± -
SURF TEXTURE: √
REMOVE BURRS, BREAK SHARP EDGES R.015 MAX

MATL - - HT TR - - FIN - -

DR 09SEP05 R. KNEPPER APP 09SEP05 T.ELBIN
CHK 06OCT05 T.ELBIN REL 06OCT05 R.KNEPPER

AMP — Tyco Electronics Harrisburg, PA 17105-3608

NAME SIDE FEED HDM APPLICATOR — MACHINE REF MINI APPL

SCALE - — D — DWG NO 1852118 — SHEET 1 OF 1 — REV A

CAGE CODE 00779 — CUSTOMER AND ASSEMBLY DRAWING — RESTRICTED TO -

THIS DRAWING IS A CONTROLLED DOCUMENT.
THIS DRAWING IS UNPUBLISHED. © COPYRIGHT 2005
RELEASED FOR PUBLICATION: OCTOBER 06,2005
BY AMP INCORPORATED. ALL RIGHTS RESERVED.