REV.	DATE	ECR NO.	DESCRIPTION
A	09/07/09	----	RELEASE TO MFG
B	09/03/10	2093	BOM UPDATED

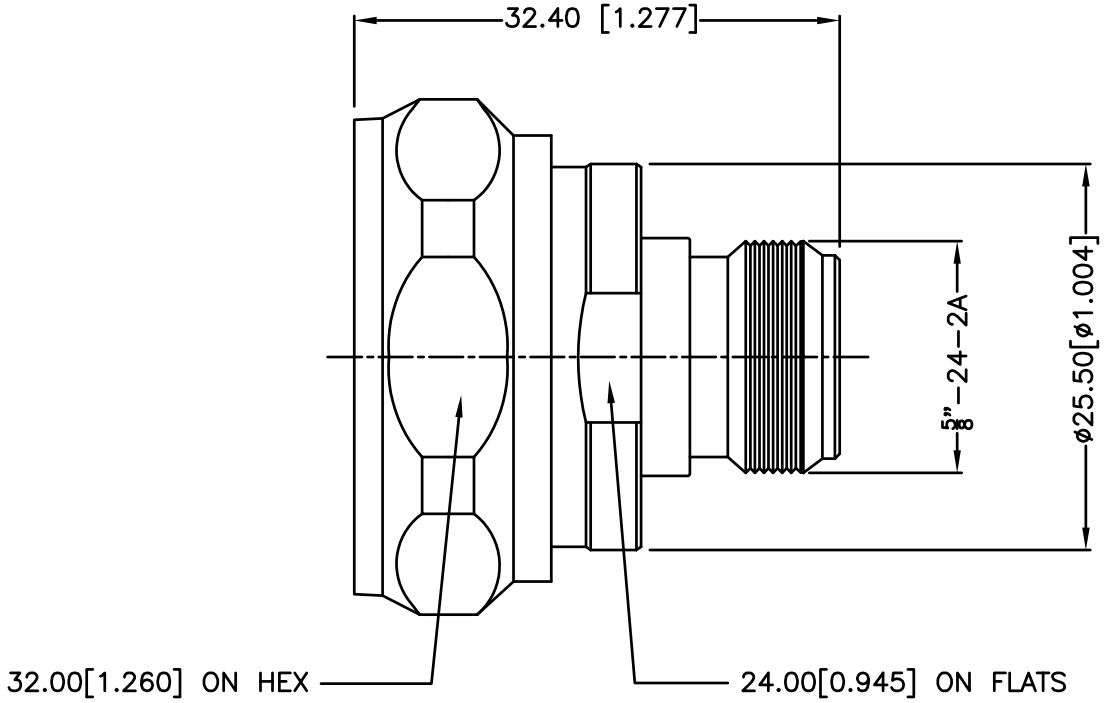

6	GASKET	SILICONE	RED	1
5	CONTACT PIN	BERYLLIUM COPPER	SILVER	1
4	INSULATOR	TEFLON	NATURAL	1
3	BODY	BRASS	NEXCOTE	1
2	SHELL	BRASS	NEXCOTE	1
1	HOUSING	BRASS	NEXCOTE	1
	DESCRIPTION	MATERIAL	FINISH	QTY

UNLESS OTHERWISE SPECIFIED DIMENSIONS ARE IN MILLIMETERS. DIMENSIONS IN [ ] ARE IN INCHES AND FOR CUSTOMER REFERANCE ONLY.

UNLESS OTHERWISE SPECIFIED TOLERANCES FOR MILLIMETERS ARE:
0.5 – 8mm ± 0.20mm
8 – 30mm ± 0.40mm
30 – 120mm ± 0.50mm

UNLESS OTHERWISE SPECIFIED TOLERANCES FOR INCHES ARE:
.020 – .315 = ± 0.007"
.315 – 1.180 = ± 0.015"
1.180 – 4.724 = ± 0.020"

DO NOT SCALE DRAWING

APPROVALS		DATE
DRAWN	CLEMENT	09/07/09
CHECKED		
ISSUED		
SHEET	1 OF 1	
CAD FILE	C:/242/242136.DWG	

AMPHENOL CONNEX

PART DESCRIPTION: N FEMALE TO 7/16 MALE ADAPTOR

PART NO. 242136

DWG. NO. 242136.DWG | REV. B | SIZE A | SCALE NA