THIS COPY IS PROVIDED ON A RESTRICTED BASIS AND IS NOT TO BE USED IN ANY WAY DETRIMENTAL TO THE INTERESTS OF PANDUIT CORP.

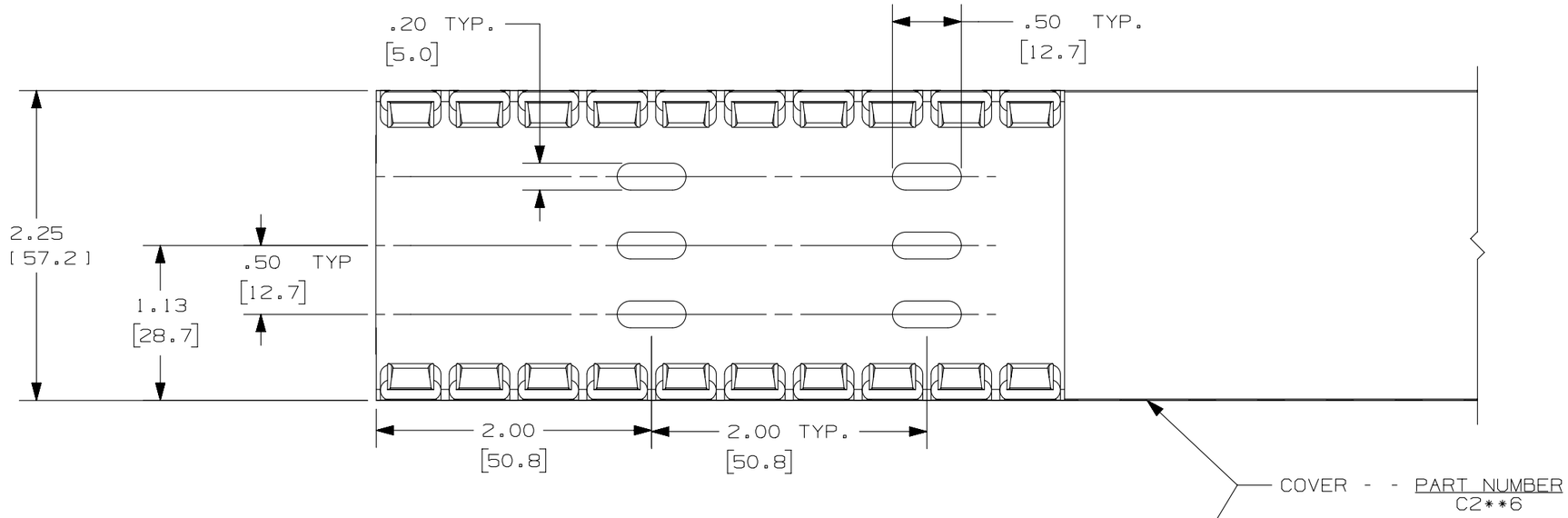

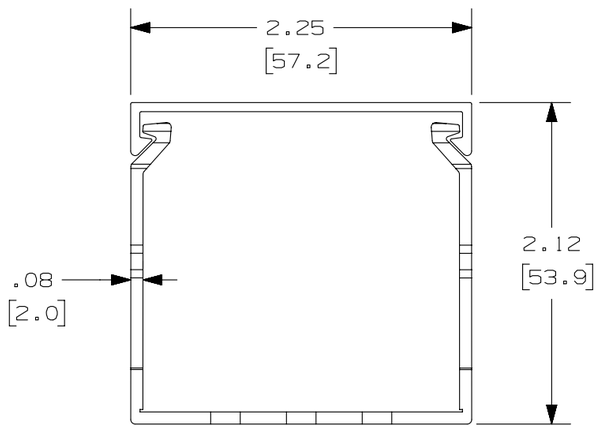

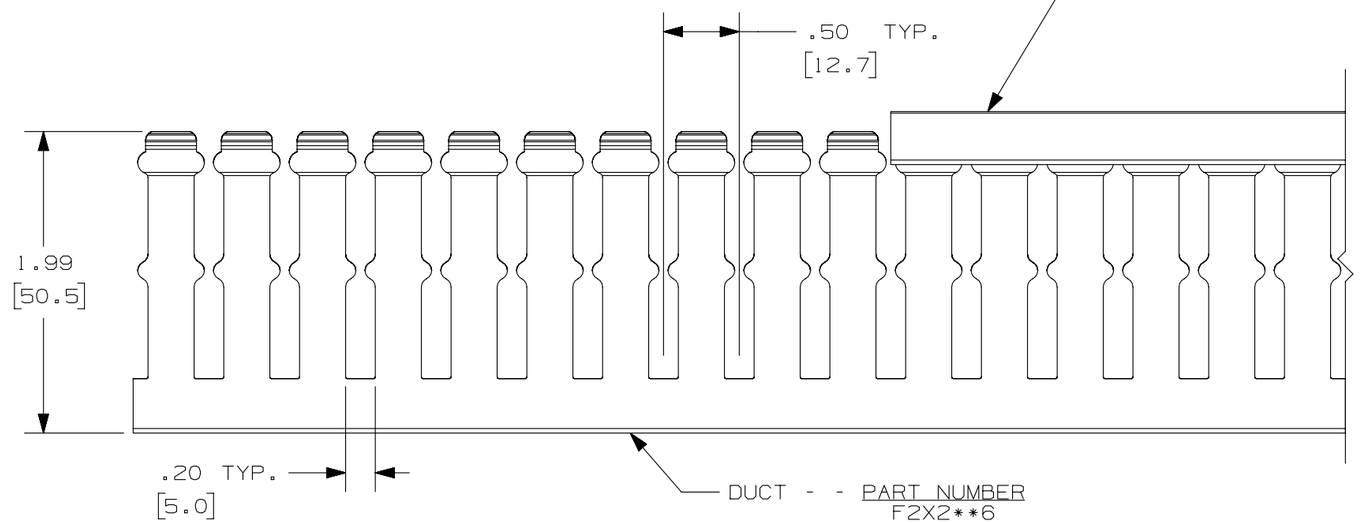

NOTE.

1. ALL DIMENSIONS ARE REFERENCE ONLY.
2. DIMENSIONS IN PARENTHESES ARE METRIC.
3. THE ** DENOTE COLOR.
4. DUCT AND COVER ARE AVAILABLE IN 6 FT [1828.8] LENGTH

REV	DATE	BY	CHK	APR	DESCRIPTION	ECN
3	02-19-13	JBN	RTFI	RTFI	I. UPDATED DRAWING BORDER & TITLE BLOCK	36897-772

TITLE

WIRING DUCT - TYPE F WITH COVER
2 X 2

MARKETING DRAWING

ITEM REVISION NAME: D11000CJ/04

DATASET FILE NAME: D11000CJ_DC/04B

UNLESS OTHERWISE SPECIFIED, DIMENSIONAL TOLERANCES ARE: IN [mm]

.X ± .XXX ±
.XX ± ANGLES ±

THIRD ANGLE PROJECTION

MATERIAL: PVC

DRAWING NUMBER: 36897-772

DRAWN BY	DATE	CHK	SCALE		SIZE
JHNU	06-18-03	JGG	FULL	SHT 1 OF 1	B

D10100DB/12