Features

- 8-bit Microcontroller Compatible with MCS®51 Products
- Enhanced 8051 Architecture
  - Single-clock Cycle per Byte Fetch
  - Up to 20 MIPS Throughput at 20 MHz Clock Frequency
  - Fully Static Operation: 0 Hz to 20 MHz
  - On-chip 2-cycle Hardware Multiplier
  - 16x16 Multiply–Accumulate Unit
  - 256x8 Internal RAM
  - 4096x8 Internal Extra RAM
  - Up to 4KB Extended Stack in Extra RAM
  - Dual Data Pointers
  - 4-level Interrupt Priority
- Nonvolatile Program and Data Memory
  - 32K/64K Bytes of In-System Programmable (ISP) Flash Program Memory
  - 8K Bytes of Flash Data Memory
  - Endurance: Minimum 100,000 Write/Erase Cycles
  - Serial Interface for Program Downloading
  - 64-byte Fast Page Programming Mode
  - 256-Byte User Signature Array
  - 2-level Program Memory Lock for Software Security
  - In-Application Programming of Program Memory
- Peripheral Features
  - Three 16-bit Enhanced Timer/Counters
  - Two 8-bit PWM Outputs
  - 4-Channel 16-bit Compare/Capture/PWM Array
  - Enhanced UART with Automatic Address Recognition and Framing Error Detection
  - Enhanced Master/Slave SPI with Double-buffered Send/Receive
  - Master/Slave Two-Wire Serial Interface
  - Programmable Watchdog Timer with Software Reset
  - Dual Analog Comparators with Selectable Interrupts and Debouncing
  - 8-channel 10-bit ADC/DAC
  - 8 General-purpose Interrupt Pins
- Special Microcontroller Features
  - Two-wire On-chip Debug Interface
  - Brown-out Detection and Power-on Reset with Power-off Flag
  - Active-low External Reset Pin
  - Internal RC Oscillator
  - Low Power Idle and Power-down Modes
  - Interrupt Recovery from Power-down Mode
- I/O and Packages
  - Up to 38 Programmable I/O Lines
  - 40-lead PDIP or 44-lead TQFP/PLCC or 44-pad VQFN/MLF
  - Configurable I/O Modes
    - Quasi-bidirectional (80C51 Style)
    - Input-Only (Tristate)
    - Push-pull CMOS Output
    - Open-drain
- Operating Conditions
  - 2.4V to 3.6V V_{DD} Voltage Range
  - -40° C to 85°C Temperature Range
  - 0 to 20 MHz @ 2.4–3.6V

8-bit Microcontroller with 32K/64K Bytes In-System Programmable Flash

AT89LP3240
AT89LP6440

3706C–MICRO–2/11

1. Pin Configurations

1.1 40P6: 40-lead PDIP

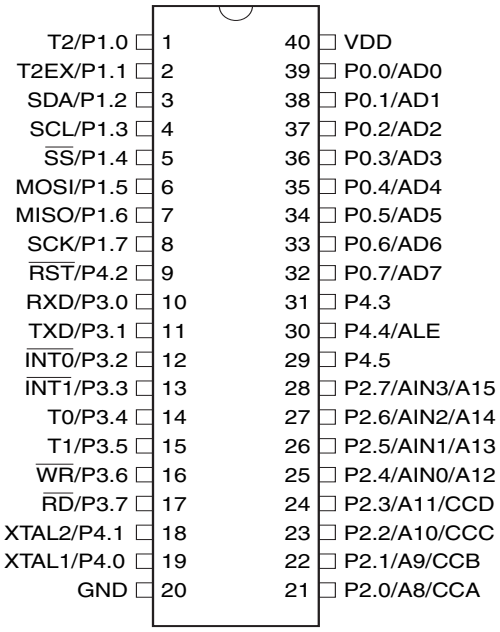

1.2 44A: 44-lead TQFP (Top View)

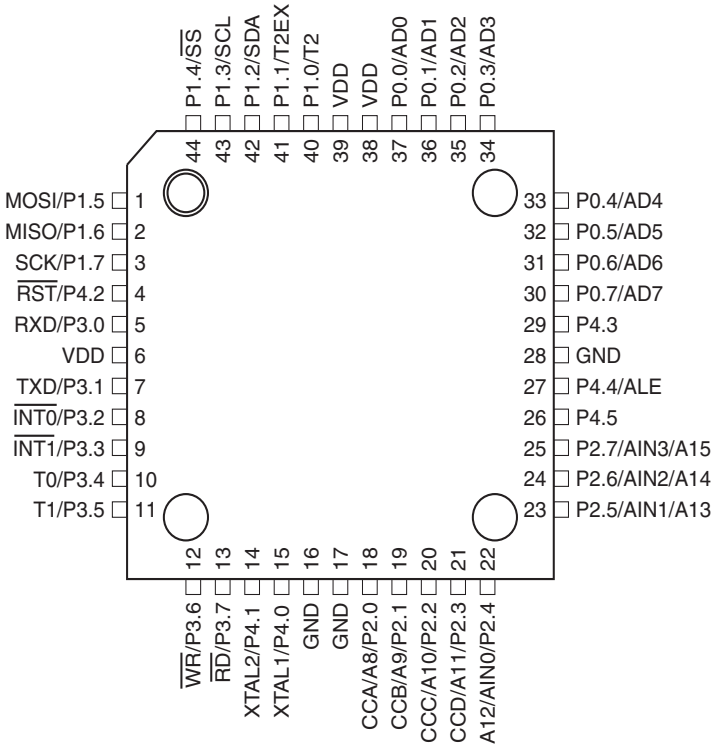

1.3 44J: 44-lead PLCC

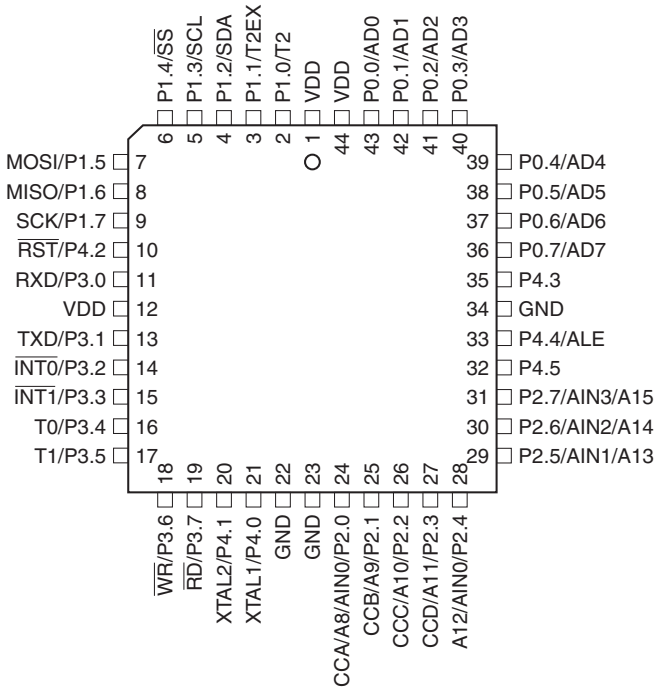

1.4 44M1: 44-pad VQFN/MLF

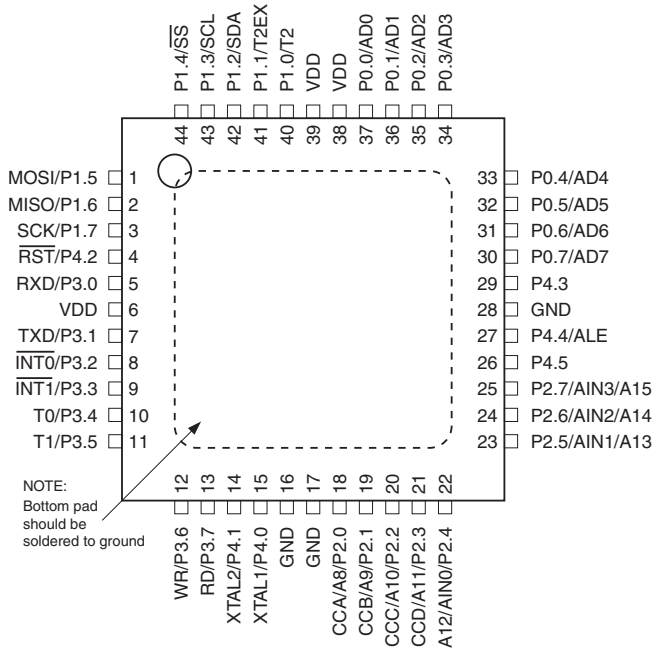

1.5 Pin Description

Table 1-1. AT89LP3240/6440 Pin Description

Pin Number				Symbol	Type	Description
TQFP	PLCC	PDIP	VQFN			
1	7	6	1	P1.5	I/O I/O I	**P1.5**: User-configurable I/O Port 1 bit 5. **MOSI**: SPI master-out/slave-in. When configured as master, this pin is an output. When configured as slave, this pin is an input. **GPI5**: General-purpose Interrupt input 5.
2	8	7	2	P1.6	I/O I/O I	**P1.6**: User-configurable I/O Port 1 bit 6. **MISO**: SPI master-in/slave-out. When configured as master, this pin is an input. When configured as slave, this pin is an output. **GPI6**: General-purpose Interrupt input 6.
3	9	8	3	P1.7	I/O I/O I	**P1.7**: User-configurable I/O Port 1 bit 7. **SCK**: SPI Clock. When configured as master, this pin is an output. When configured as slave, this pin is an input. **GPI7**: General-purpose Interrupt input 7.
4	10	9	4	P4.2	I/O I I	**P4.2**: User-configurable I/O Port 4 bit 2 (if Reset Fuse is disabled). **$\overline{\text{RST}}$**: External **Active-Low** Reset input (if Reset Fuse is enabled. See "External Reset" on page 35.). **DCL**: Serial Clock input for On-Chip Debug Interface when OCD is enabled.
5	11	10	5	P3.0	I/O I	**P3.0**: User-configurable I/O Port 3 bit 0. **RXD**: Serial Port Receiver Input.
6	12		6	VDD	I	Supply Voltage
7	13	11	7	P3.1	I/O O	**P3.1**: User-configurable I/O Port 3 bit 1. **TXD**: Serial Port Transmitter Output.
8	14	12	8	P3.2	I/O I	**P3.2**: User-configurable I/O Port 3 bit 2. **$\overline{\text{INT0}}$**: External Interrupt 0 Input or Timer 0 Gate Input.
9	15	13	9	P3.3	I/O I	**P3.3**: User-configurable I/O Port 3 bit 3. **INT1**: External Interrupt 1 Input or Timer 1 Gate Input
10	16	14	10	P3.4	I/O I/O	**P3.4**: User-configurable I/O Port 3 bit 4. **T1**: Timer/Counter 0 External input or PWM output.
11	17	15	11	P3.5	I/O I/O	**P3.5**: User-configurable I/O Port 3 bit 5. **T1**: Timer/Counter 1 External input or PWM output.
12	18	16	12	P3.6	I/O O	**P3.6**: User-configurable I/O Port 3 bit 6. **$\overline{\text{WR}}$**: External memory interface Write Strobe (active-low).
13	19	17	13	P3.7	I/O O	**P3.7**: User-configurable I/O Port 3 bit 7. **$\overline{\text{RD}}$**: External memory interface Read Strobe (active-low).
14	20	18	14	P4.1	I/O O O I/O	**P4.1**: User-configurable I/O Port 4 bit 1. **XTAL2**: Output from inverting oscillator amplifier. It may be used as a port pin if the internal RC oscillator is selected as the clock source. **CLKOUT**: When the internal RC oscillator is selected as the clock source, may be used to output the internal clock divided by 2. **DDA**: Serial Data input/output for On-Chip Debug Interface when OCD is enabled and the external clock is selected as the clock source.
15	21	19	15	P4.0	I/O I I/O	**P4.0**: User-configurable I/O Port 4 bit 0. **XTAL1**: Input to the inverting oscillator amplifier and internal clock generation circuits. It may be used as a port pin if the internal RC oscillator is selected as the clock source. **DDA**: Serial Data input/output for On-Chip Debug Interface when OCD is enabled and the internal RC oscillator is selected as the clock source.
16	22	N/A	16	GND	I	Ground

Table 1-1. AT89LP3240/6440 Pin Description

Pin Number				Symbol	Type	Description
TQFP	PLCC	PDIP	VQFN			
17	23	20	17	GND	I	Ground
18	24	21	18	P2.0	I/O I/O O	**P2.0**: User-configurable I/O Port 2 bit 0. **CCA**: Timer 2 Channel A Compare Output or Capture Input. **A8**: External memory interface Address bit 8.
19	25	22	19	P2.1	I/O I/O O	**P2.1**: User-configurable I/O Port 2 bit 1. **CCB**: Timer 2 Channel B Compare Output or Capture Input. **A9**: External memory interface Address bit 9.
20	26	23	20	P2.1	I/O I/O O O	**P2.2**: User-configurable I/O Port 2 bit 2. **CCC**: Timer 2 Channel C Compare Output or Capture Input. **A10**: External memory interface Address bit 10. **DA-**: DAC negative differential output.
21	27	24	21	P2.3	I/O I/O O O	**P2.3**: User-configurable I/O Port 2 bit 3. **CCD**: Timer 2 Channel D Compare Output or Capture Input. **A11**: External memory interface Address bit 11. **D+-**: DAC positive differential output.
22	28	25	22	P2.4	I/O I O	**P2.4**: User-configurable I/O Port 2 bit 5. **AIN0**: Analog Comparator Input 0. **A12**: External memory interface Address bit 12.
23	29	26	23	P2.5	I/O I O	**P2.5**: User-configurable I/O Port 2 bit 5. **AIN1**: Analog Comparator Input 1. **A13**: External memory interface Address bit 13.
24	30	27	24	P2.6	I/O I O	**P2.6**: User-configurable I/O Port 2 bit 6. **AIN2**: Analog Comparator Input 2. **A14**: External memory interface Address bit 14.
25	31	28	25	P2.7	I/O I O	**P2.7**: User-configurable I/O Port 2 bit 7. **AIN3**: Analog Comparator Input 3. **A15**: External memory interface Address bit 15.
26	32	29	26	P4.5	I/O	**P4.5**: User-configurable I/O Port 4 bit 5.
27	33	30	27	P4.4	I/O O	**P4.4**: User-configurable I/O Port 4 bit 4. **ALE**: External memory interface Address Latch Enable.
28	34		28	GND	I	Ground
29	35	31	29	P4.3	I/O I/O	**P4.3**: User-configurable I/O Port 4 bit 3. **DDA**: Serial Data input/output for On-Chip Debug Interface when OCD is enabled and the Crystal oscillator is selected as the clock source.
30	36	32	30	P0.7	I/O O I	**P0.7**: User-configurable I/O Port 0 bit 7. **AD7**: External memory interface Address/Data bit 7. **ADC7**: ADC analog input 7.
31	37	33	31	P0.6	I/O O I	**P0.6**: User-configurable I/O Port 0 bit 6. **AD6**: External memory interface Address/Data bit 6. **ADC6**: ADC analog input 6.
32	38	34	32	P0.5	I/O O I	**P0.5**: User-configurable I/O Port 0 bit 5. **AD5**: External memory interface Address/Data bit 5. **ADC5**: ADC analog input 5.
33	39	35	33	P0.4	I/O O I	**P0.4**: User-configurable I/O Port 0 bit 4. **AD4**: External memory interface Address/Data bit 4. **ADC4**: ADC analog input 4.
34	40	36	34	P0.3	I/O O I	**P0.3**: User-configurable I/O Port 0 bit 3. **AD3**: External memory interface Address/Data bit 3. **ADC3**: ADC analog input 3.

Table 1-1. AT89LP3240/6440 Pin Description

Pin Number				Symbol	Type	Description
TQFP	PLCC	PDIP	VQFN			
35	41	37	35	P0.2	I/O O I	**P0.2**: User-configurable I/O Port 0 bit 2. **AD2**: External memory interface Address/Data bit 2. **ADC2**: ADC analog input 2.
36	42	38	36	P0.1	I/O O I	**P0.1**: User-configurable I/O Port 0 bit 1. **AD1**: External memory interface Address/Data bit 1. **ADC1**: ADC analog input 1.
37	43	39	37	P0.0	I/O O I	**P0.0**: User-configurable I/O Port 0 bit 0. **AD0**: External memory interface Address/Data bit 0. **ADC0**: ADC analog input 0.
38	44	40	38	VDD	I	Supply Voltage
39	1		39	VDD	I	Supply Voltage
40	2	1	40	P1.0	I/O I/O I	**P1.0**: User-configurable I/O Port 1 bit 0. **T2**: Timer 2 External Input or Clock Output. **GPI0**: General-purpose Interrupt input 0.
41	3	2	41	P1.1	I/O I I	**P1.1**: User-configurable I/O Port 1 bit 1. **T2EX**: Timer 2 External Capture/Reload Input. **GPI1**: General-purpose Interrupt input 1
42	4	3	42	P1.2	I/O I	**P1.2**: User-configurable I/O Port 1 bit 2. **GPI2**: General-purpose Interrupt input 2.
43	5	4	43	P1.3	I/O I	**P1.3**: User-configurable I/O Port 1 bit 3. **GPI3**: General-purpose Interrupt input 3.
44	6	5	44	P1.4	I/O I I	**P1.4**: User-configurable I/O Port 1 bit 4. **$\overline{SS}$**: SPI Slave-Select. **GPI6**: General-purpose Interrupt input 4.

2. Overview

The AT89LP3240/6440 is a low-power, high-performance CMOS 8-bit microcontroller with 32K/64K bytes of In-System Programmable Flash program memory and 8K bytes of Flash data memory. The device is manufactured using Atmel®'s high-density nonvolatile memory technology and is compatible with the industry-standard 8051 instruction set. The AT89LP3240/6440 is built around an enhanced CPU core that can fetch a single byte from memory every clock cycle. In the classic 8051 architecture, each fetch requires 6 clock cycles, forcing instructions to execute in 12, 24 or 48 clock cycles. In the AT89LP3240/6440 CPU, standard instructions need only 1 to 4 clock cycles providing 6 to 12 times more throughput than the standard 8051. Seventy percent of instructions need only as many clock cycles as they have bytes to execute, and most of the remaining instructions require only one additional clock. The enhanced CPU core is capable of 20 MIPS throughput whereas the classic 8051 CPU can deliver only 4 MIPS at the same current consumption. Conversely, at the same throughput as the classic 8051, the new CPU core runs at a much lower speed and thereby greatly reducing power consumption and EMI.

The AT89LP3240/6440 provides the following standard features: 32K/64K bytes of In-System Programmable Flash program memory, 8K bytes of Flash data memory, 4352 bytes of RAM, up to 38 I/O lines, three 16-bit timer/counters, up to six PWM outputs, a programmable watchdog timer, two analog comparators, a 10-bit ADC/DAC with 8 input channels, a full-duplex serial port, a serial peripheral interface, a two-wire serial interface, an internal RC oscillator, on-chip crystal oscillator, and a four-level, twelve-vector interrupt system. A block diagram is shown in Figure 2-1.

Timer 0 and Timer 1 in the AT89LP3240/6440 are enhanced with two new modes. Mode 0 can be configured as a variable 9- to 16-bit timer/counter and Mode 1 can be configured as a 16-bit auto-reload timer/counter. In addition, the timer/counters may each independently drive an 8-bit precision pulse width modulation output.

Timer 2 on the AT89LP3240/6440 serves as a 16-bit time base for a 4-channel Compare/Capture Array with up to four multi-phasic, variable precision (up to 16-bit) PWM outputs.

The enhanced UART of the AT89LP3240/6440 includes Framing Error Detection and Automatic Address Recognition. In addition, enhancements to Mode 0 allow hardware accelerated emulation of half-duplex SPI or Two Wire interfaces.

The I/O ports of the AT89LP3240/6440 can be independently configured in one of four operating modes. In quasi-bidirectional mode, the ports operate as in the classic 8051. In input-only mode, the ports are tristated. Push-pull output mode provides full CMOS drivers and open-drain mode provides just a pull-down. In addition, all 8 pins of Port 1 can be configured to generate an interrupt using the general-purpose interrupt interface.

2.1 Block Diagram

Figure 2-1. AT89LP3240/6440 Block Diagram

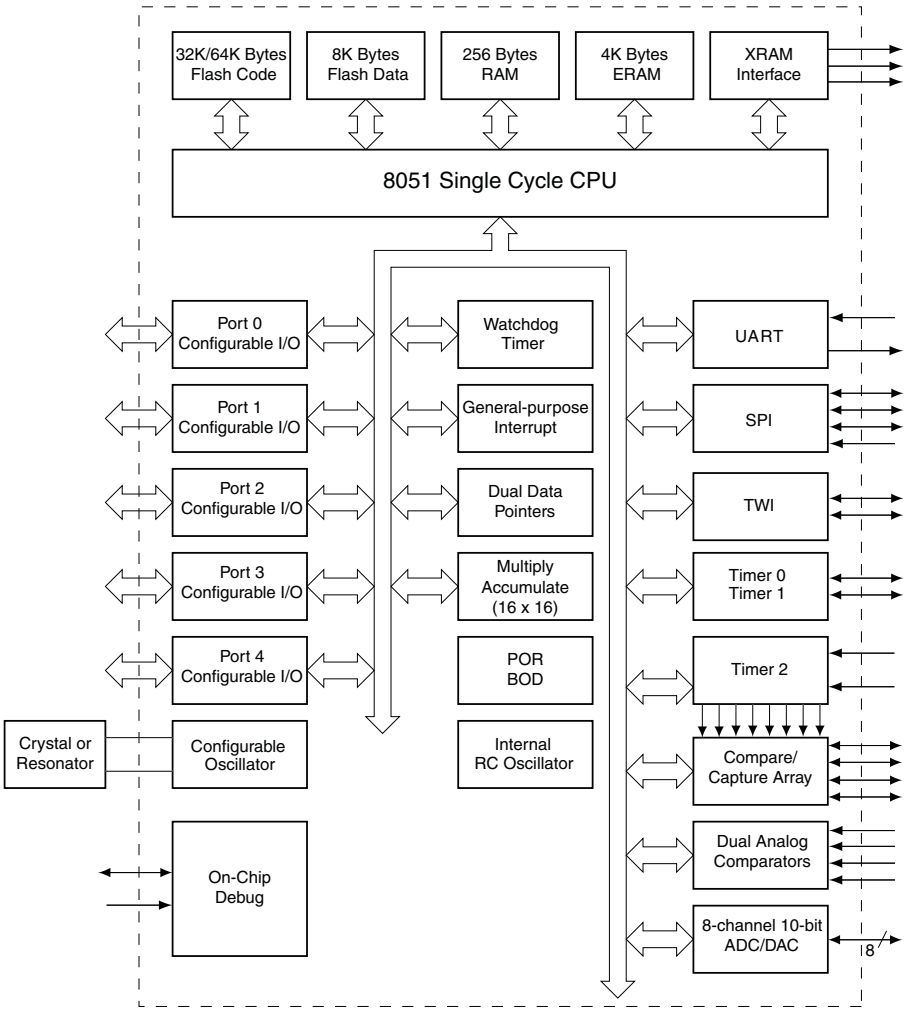

2.2 System Configuration

The AT89LP3240/6440 supports several system configuration options. Nonvolatile options are set through user fuses that must be programmed through the flash programming interface. Volatile options are controlled by software through individual bits of special function registers (SFRs). The AT89LP3240/6440 must be properly configured before correct operation can occur.

2.2.1 Fuse Options

Table 2-1 lists the fusable options for the AT89LP3240/6440. These options maintain their state even when the device is powered off, but can only be changed with an external device programmer. For more information, see Section 25.7 “User Configuration Fuses” on page 164.

Table 2-1. User Configuration Fuses

Fuse Name	Description
Clock Source	Selects between the High Speed Crystal Oscillator, Low Speed Crystal Oscillator, External Clock or Internal RC Oscillator for the source of the system clock.
Start-up Time	Selects time-out delay for the POR/BOD/PWD wake-up period.
Reset Pin Enable	Configures the $\overline{RST}$ pin as a reset input or general purpose I/O
Brown-Out Detector Enable	Enables or disables the Brown-out Detector
On-Chip Debug Enable	Enables or disables On-Chip Debug. OCD must be enabled prior to using an in-circuit debugger with the device.
In-System Programming Enable	Enables or disables In-System Programming.
User Signature Programming Enable	Enables or disables programming of User Signature array.
Default Port State	Configures the default port state as input-only mode (tristated) or quasi-bidirectional mode (weakly pulled high).
In-Application Programming Enable	Enables or disabled In-Application (self) Programming

2.2.2 Software Options

Table 2-2 lists some important software configuration bits that affect operation at the system level. These can be changed by the application software but are set to their default values upon any reset. Most peripherals also have multipe configuration bits that are not listed here.

Table 2-2. Important Software Configuration Bits

Bit(s)	SFR Location	Description
PxM0.y PxM1.y	P0M0, P0M1, P1M0, P1M1, P2M0, P2M1, P3M0, P3M1, P4M0, P4M1	Configures the I/O mode of Port x Pin y to be one of input-only, quasi-bidirectional, push-pull output or open-drain. The default state is controlled by the Default Port State fuse above
CDV_{2-0}	CLKREG.3-1	Selects the division ratio between the oscillator and the system clock
TPS_{3-0}	CLKREG.7-4	Selects the division ratio between the system clock and the timers
ALES	AUXR.0	Enables/disables toggling of ALE
EXRAM	AUXR.1	Enables/disables access to on-chip memories that are mapped to the external data memory address space
WS_{1-0}	AUXR.3-2	Selects the number of wait states when accessing external data memory
XSTK	AUXR.4	Congifures the hardware stack to be in RAM or extra RAM
DMEN	MEMCON.3	Enables/disables access to the on-chip flash data memory
IAP	MEMCON.7	Enbles/disables the self programming feature when the fuse allows

2.3 Comparison to Standard 8051

The AT89LP3240/6440 is part of a family of devices with enhanced features that are fully binary compatible with the 8051 instruction set. In addition, most SFR addresses, bit assignments, and pin alternate functions are identical to Atmel's existing standard 8051 products. However, due to the high performance nature of the device, some system behaviors are different from those of Atmel's standard 8051 products such as AT89S52 or AT89C2051. The major differences from the standard 8051 are outlined in the following paragraphs and may be useful to users migrating to the AT89LP3240/6440 from older devices.

2.3.1 System Clock

The maximum CPU clock frequency equals the externally supplied XTAL1 frequency. The oscillator is not divided by 2 to provide the internal clock and X2 mode is not supported. The System Clock Divider can scale the CPU clock versus the oscillator source (See Section 6.5 on page 32).

2.3.2 Reset

The $\overline{RST}$ pin of the AT89LP3240/6440 is **active-LOW** as compared with the active-high reset in the standard 8051. In addition, the $\overline{RST}$ pin is sampled every clock cycle and must be held low for a minimum of two clock cycles, instead of 24 clock cycles, to be recognized as a valid reset.

2.3.3 Instruction Execution with Single-cycle Fetch

The CPU fetches one code byte from memory every clock cycle instead of every six clock cycles. This greatly increases the throughput of the CPU. As a consequence, the CPU no longer executes instructions in 12, 24 or 48 clock cycles. Each standard instruction executes in only 1 to 4 clock cycles. See “Instruction Set Summary” on page 143 for more details. Any software delay loops or instruction-based timing operations may need to be retuned to achieve the desired results.

2.3.4 Interrupt Handling

The interrupt controller polls the interrupt flags during the last clock cycle of any instruction. In order for an interrupt to be serviced at the end of an instruction, its flag needs to have been latched as active during the next to last clock cycle of the instruction, or in the last clock cycle of the previous instruction if the current instruction executes in only a single clock cycle.

The external interrupt pins, $\overline{INT0}$ and $\overline{INT1}$, are sampled at every clock cycle instead of once every 12 clock cycles. Coupled with the shorter instruction timing and faster interrupt response, this leads to a higher maximum rate of incidence for the external interrupts.

The Serial Peripheral Interface (SPI) has a dedicated interrupt vector. The SPI no longer shares its interrupt with the Serial Port and the ESPI (IE2.2) bit replaces SPIE (SPCR.7).

2.3.5 Timer/Counters

By default Timer0, Timer 1 and Timer 2 are incremented at a rate of once per clock cycle. This compares to once every 12 clocks in the standard 8051. A common prescaler is available to divide the time base for all timers and reduce the increment rate. The TPS_{3-0} bits in the CLKREG SFR control the prescaler (Table 6-2 on page 33). Setting TPS_{3-0} = 1011B will cause the timers to count once every 12 clocks.

The external Timer/Counter pins, T0, T1, T2 and T2EX, are sampled at every clock cycle instead of once every 12 clock cycles. This increases the maximum rate at which the Counter modules may function.

There is no difference in counting rate between Timer 2's Auto-Reload/Capture and Baud Rate/Clock Out modes. All modes increment the timer once per clock cycle. Timer 2 in Auto-Reload/Capture mode increments at 12 times the rate of standard 8051s. Setting TPS_{3-0} = 1101B will force Timer 2 to count every twelve clocks. Timer 2 in Baud Rate or Clock Out mode increments at twice the rate of standard 8051s. Setting TPS_{3-0} = 0001B will force Timer 2 to count every two clocks.

2.3.6 Serial Port

The baud rate of the UART in Mode 0 defaults to 1/4 the clock frequency, compared to 1/12 the clock frequency in the standard 8051. In should also be noted that when using Timer 1 to generate the baud rate in UART Modes 1 or 3, the timer counts at the clock frequency and not at 1/12 the clock frequency. To maintain the same baud rate in the AT89LP3240/6440 while running at the same frequency as a standard 8051, the time-out period must be 12 times longer. Mode 1 of Timer 1 supports 16-bit auto-reload to facilitate longer time-out periods for generating low baud rates.

Timer 2 generated baud rates are twice as fast in the AT89LP3240/6440 than on standard 8051s when operating at the same frequency. The Timer Prescaler can also scale the baud rate to match an existing application.

2.3.7 SPI

The Serial Peripheral Interface (SPI) has a dedicated interrupt vector. The ESPI (IE2.2) bit replaces SPIE (SPCR.7). SPCR.7 (TSCK) now enables timer-generated baud rate.

The SPI includes Mode Fault detection. If multiple-master capabilities are not required, SSIG (SPSR.2) must be set to one for master mode to function correctly when $\overline{SS}$ (P1.4) is a general purpose I/O.

2.3.8 Watchdog Timer

The Watchdog Timer in AT89LP3240/6440 counts at a rate of once per clock cycle. This compares to once every 12 clocks in the standard 8051. A common prescaler is available to divide the time base for all timers and reduce the counting rate.

2.3.9 I/O Ports

The I/O ports of the AT89LP3240/6440 may be configured in four different modes. By default all the I/O ports revert to input-only (tristated) mode at power-up or reset. In the standard 8051, all ports are weakly pulled high during power-up or reset. To enable 8051-like ports, the ports must be put into quasi-bidirectional mode by clearing the P1M0, P2M0, P3M0 and P4M0 SFRs. The user can also configure the ports to start in quasi-bidirectional mode by disabling the Tristate-Port User Fuse. When this fuse is disabled, P1M0, P2M0, P3M0 and P4M0 will reset to 00h instead of FFh and the ports will be weakly pulled high. Port 0 and the upper nibble of Port 2 always power up tristated regardless of the fuse setting due to their analog functions.

2.3.10 External Memory Interface

The AT89LP3240/6440 does not support external program memory. The $\overline{PSEN}$ and $\overline{EA}$ functions are not supported and those pins are replaced with general purpose I/O. The ALE strobe does not toggle continuously and cannot be used as a board-level clock.

3. Memory Organization

The AT89LP3240/6440 uses a Harvard Architecture with separate address spaces for program and data memory. The program memory has a regular linear address space with support for 64K bytes of directly addressable application code. The data memory has 256 bytes of internal RAM and 128 bytes of Special Function Register I/O space. The AT89LP3240/6440 supports external data memory with portions of the external data memory space implemented on chip as Extra RAM and nonvolatile Flash data memory. External program memory is not supported. The memory address spaces of the AT89LP3240/6440 are listed in Table 3-1.

Table 3-1. AT89LP3240/6440 Memory Address Spaces

Name	Description	Range
DATA	Directly addressable internal RAM	00H–7FH
IDATA	Indirectly addressable internal RAM and stack space	00H–FFH
SFR	Directly addressable I/O register space	80H–FFH
EDATA	On-chip Extra RAM and extended stack space	0000H–0FFFH
FDATA	On-chip nonvolatile Flash data memory	1000H–2FFFH
XDATA	External data memory	3000H–FFFFH
CODE	On-chip nonvolatile Flash program memory (AT89LP3240)	0000H–7FFFH
	On-chip nonvolatile Flash program memory (AT89LP6440)	0000H–FFFFH
SIG	On-chip nonvolatile Flash signature array	0000H–01FFH

3.1 Program Memory

The AT89LP3240/6440 contains 32K/64K bytes of on-chip In-System Programmable Flash memory for program storage. The Flash memory has an endurance of at least 100,000 write/erase cycles and a minimum data retention time of 10 years. The reset and interrupt vectors are located within the first 83 bytes of program memory (refer to Table 9-1 on page 41). Constant tables can be allocated within the entire 32K/64K program memory address space for access by the MOVC instruction. The AT89LP3240/6440 does not support external program memory. A map of the AT89LP3240/6440 program memory is shown in Figure 3-1.

3.1.1 SIG

In addition to the 64K code space, the AT89LP3240/6440 also supports a 256-byte User Signature Array and a 128-byte Atmel Signature Array that are accessible by the CPU. The Atmel Signature Array is initialized with the Device ID in the factory. The second page of the User Signature Array (0180H–01FFH) is initialized with analog configuration data including the Internal RC Oscillator calibration byte. The User Signature Array is available for user identification codes or constant parameter data. Data stored in the signature array is not secure. Security bits will disable writes to the array; however, reads by an external device programmer are always allowed.

In order to read from the signature arrays, the SIGEN bit (DPCF.3) must be set (See Table 5-5 on page 28). While SIGEN is one, MOVC A,@A+DPTR will access the signature arrays. The User Signature Array is mapped from addresses 0100h to 01FFh and the Atmel Signature Array is mapped from addresses 0000h to 007Fh. SIGEN must be cleared before using MOVC to access the code memory. The User Signature Array may also be modified by the In-Application Programming interface. When IAP = 1 and SIGEN = 1, MOVX @DPTR instructions will access the array (See Section 3.5 on page 21).

Figure 3-1. Program Memory Map

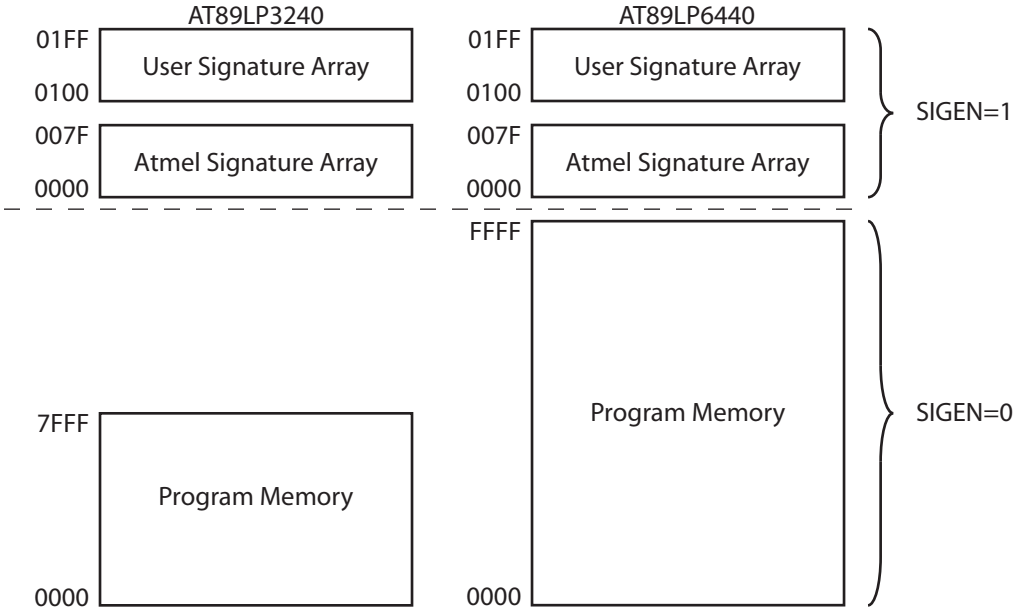

3.2 Internal Data Memory

The AT89LP3240/6440 contains 256 bytes of general SRAM data memory plus 128 bytes of I/O memory mapped into a single 8-bit address space. Access to the internal data memory does not require any configuration. The internal data memory has three address spaces: DATA, IDATA and SFR; as shown in Figure 3-2. Some portions of external data memory are also implemented internally. See "External Data Memory" below for more information.

Figure 3-2. Internal Data Memory Map

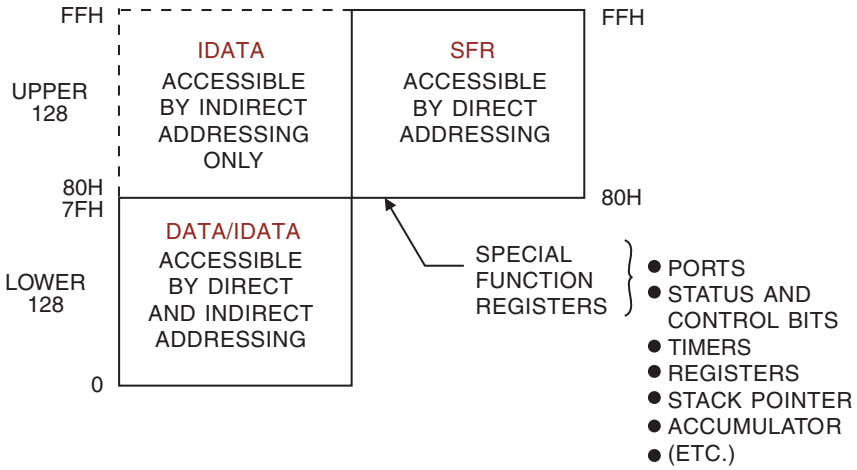

3.2.1 DATA

The first 128 bytes of RAM are directly addressable by an 8-bit address (00H–7FH) included in the instruction. The lowest 32 bytes of DATA memory are grouped into 4 banks of 8 registers each. The RS0 and RS1 bits (PSW.3 and PSW.4) select which register bank is in use. Instructions using register addressing will only access the currently specified bank. The lower 128 bit addresses are also mapped into DATA addresses 20H—2FH.

3.2.2 IDATA

The full 256 byte internal RAM can be indirectly addressed using the 8-bit pointers R0 and R1. The first 128 bytes of IDATA include the DATA space. The hardware stack is also located in the IDATA space when XSTK = 0.

3.2.3 SFR

The upper 128 direct addresses (80H–FFH) access the I/O registers. I/O registers on AT89LP devices are referred to as Special Function Registers. The SFRs can only be accessed through direct addressing. All SFR locations are not implemented. See Section 4. for a listed of available SFRs.

3.3 External Data Memory

AT89LP microcontrollers support a 16-bit external memory address space for up to 64K bytes of external data memory (XDATA). The external memory space is accessed with the MOVX instructions. Some internal data memory resources are mapped into portions of the external address space as shown in Figure 3-3. These memory spaces may require configuration before the CPU can access them. The AT89LP3240/6440 includes 4K bytes of on-chip Extra RAM (EDATA) and 8K bytes of nonvolatile Flash data memory (FDATA).

Figure 3-3. External Data Memory Map

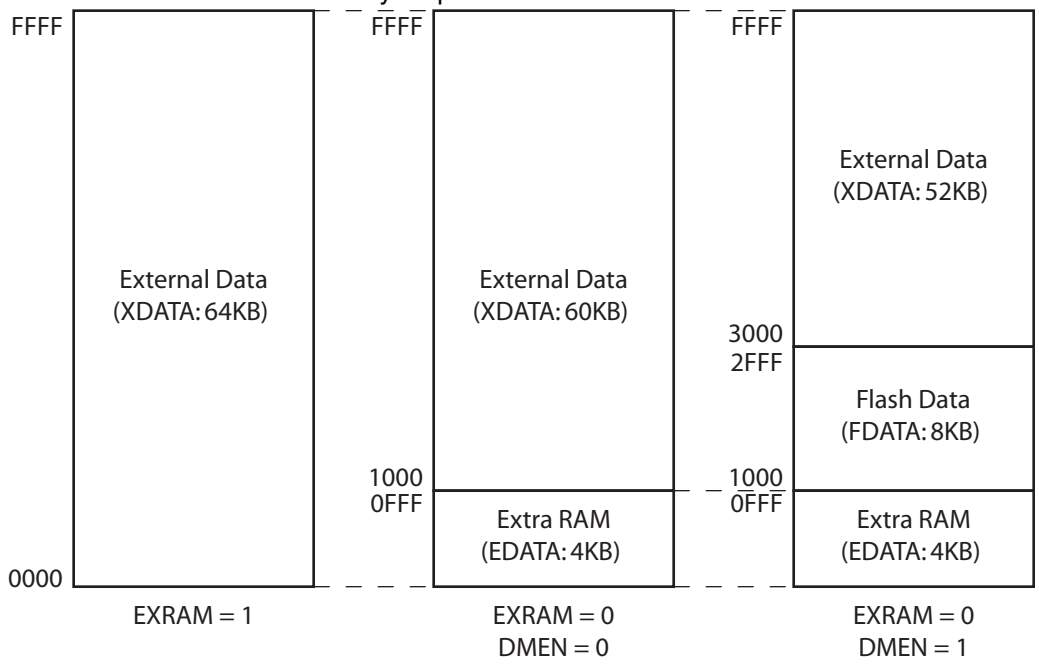

3.3.1 XDATA

The external data memory space can accommodate up to 64KB of external memory. The AT89LP3240/6440 uses the standard 8051 external memory interface with the upper address byte on Port 2, the lower address byte and data in/out multiplexed on Port 0, and the ALE, $\overline{RD}$ and $\overline{WR}$ strobes. MOVX instructions targeted to XDATA require a minimum of 4 clock cycles. XDATA can be accessed with both 16-bit (MOVX @DPTR) and 8-bit (MOVX @Ri) addresses. See Section 3.3.4 on page 17 for more details of the external memory interface.

Some internal data memory spaces are mapped into portions of the XDATA address space. In this case the lower address ranges will access internal resources instead of external memory. Addresses above the range implemented internally will default to XDATA. The AT89LP3240/6440 supports up to 52K or 60K bytes of external memory when using the internally mapped memories. Setting the EXRAM bit (AUXR.1) to one will force all MOVX instructions to access the entire 64KB XDATA regardless of their address (See "AUXR – Auxiliary Control Register" on page 18).

3.3.2 EDATA

The Extra RAM is a portion of the external memory space implemented as an internal 4K byte auxiliary RAM. The Extra RAM is mapped into the EDATA space at the bottom of the external memory address space, from 0000H to 0FFFH. MOVX instructions to this address range will access the internal Extra RAM. EDATA can be accessed with both 16-bit (MOVX @DPTR) and 8-bit (MOVX @Ri) addresses. When 8-bit addresses are used, the PAGE register (086H) supplies the upper address bits. The PAGE register breaks EDATA into sixteen 256-byte pages. A page cannot be specified independently for MOVX @R0 and MOVX @R1. Setting PAGE above 0FH enables XDATA access, but does not change the value of Port 2. When 16-bit addresses are used (DPTR), the IAP bit (MEMCON.7) must be zero to access EDATA. MOVX instructions to EDATA require a minimum of 2 clock cycles.

Table 3-2. PAGE – EDATA Page Register

PAGE = 86H — Reset Value = 0000 0000B

Not Bit Addressable

	PAGE.7	PAGE.6	PAGE.5	PAGE.4	PAGE.3	PAGE.2	PAGE.1	PAGE.0
Bit	7	6	5	4	3	2	1	0

Symbol	Function
$PAGE_{7-0}$	Selects which 256-byte page of EDATA is currently accessible by MOVX @Ri instructions when PAGE < 10H. Any PAGE value between 10H and FFH will selected XDATA; however, this value will not be output on P2.

3.3.3 FDATA

The Flash Data Memory is a portion of the external memory space implemented as an internal nonvolatile data memory. Flash Data Memory is enabled by setting the DMEN bit (MEMCON.3) to one. When IAP = 0 and DMEN = 1, the Flash Data Memory is mapped into the FDATA space, directly above the EDATA space near the bottom of the external memory address space, from 1000H to 2FFFH. (See Figure 3-3). MOVX instructions to this address range will access the internal nonvolatile memory. FDATA is not accessible while DMEN = 0. FDATA can be accessed only by 16-bit (MOVX @DPTR) addresses. MOVX @Ri instructions to the FDATA address range will access external memory. Addresses above the FDATA range are mapped to XDATA. MOVX instructions to FDATA require a minimum of 4 clock cycles.

3.3.3.1 Write Protocol

The FDATA address space accesses an internal nonvolatile data memory. This address space can be read just like EDATA by issuing a MOVX A,@DPTR; however, writes to FDATA require a more complex protocol and take several milliseconds to complete. The AT89LP3240/6440 uses an *idle-while-write* architecture where the CPU is placed in an idle state while the write occurs. When the write completes, the CPU will continue executing with the instruction after the MOVX @DPTR,A instruction that started the write. All peripherals will continue to function during the write cycle; however, interrupts will not be serviced until the write completes.

To enable write access to the nonvolatile data memory, the MWEN bit (MEMCON.4) must be set to one. When MWEN = 1 and DMEN = 1, MOVX @DPTR,A may be used to write to FDATA. FDATA uses flash memory with a page-based programming model. Flash data memory differs from traditional EEPROM data memory in the method of writing data. EEPROM generally can update a single byte with any value. Flash memory splits programming into write and erase operations. A Flash write can only program zeroes, i.e change ones into zeroes ($1 \rightarrow 0$). Any ones in the write data are ignored. A Flash erase sets an entire page of data to ones so that all bytes become FFH. Therefore after an erase, each byte in the page can be written only once with any possible value. Bytes can not be overwritten once they are changed from the erased state without possibility of corrupting the data. Therefore, if even a single byte needs updating; then the contents of the page must first be saved, the entire page must be erased and the zero bits in all bytes (old and new data combined) must be written. Avoiding unnecessary page erases greatly improves the endurance of the memory.

The AT89LP3240/6440 includes 64 data pages of 128 bytes each. One or more bytes in a page may be written at one time. The AT89LP3240/6440 includes a temporary page buffer of 64 bytes, or half of a page. Because the page buffer is 64 bytes long, the maximum number of bytes written at one time is 64. Therefore, two write cycles are required to fill the entire 128-byte page, one for the low half page (00H–3FH) and one for the high half page (40H–7FH) as shown in Figure 3-4.

Figure 3-4. Page Programming Structure

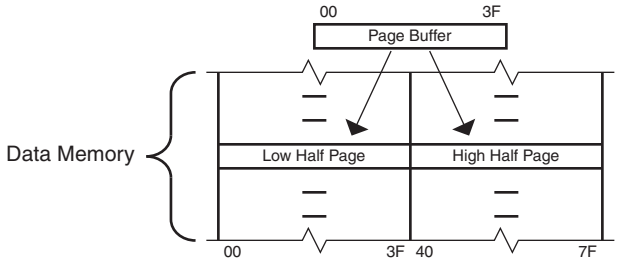

The LDPG bit (MEMCON.5) allows multiple data bytes to be loaded to the temporary page buffer. While LDPG = 1, MOVX @DPTR,A instructions will load data to the page buffer, but will not start a write sequence. Note that a previously loaded byte must not be reloaded prior to the write sequence. To write the half page into the memory, LDPG must first be cleared and then a MOVX @DPTR,A with the final data byte is issued. The address of the final MOVX determines which half page will be written. If a MOVX @DPTR,A instruction is issued while LDPG = 0 without loading any previous bytes, only a single byte will be written. The page buffer is reset after each write operation. Figures 3-5 and Figure 3-6 on page 16 show the difference between byte writes and page writes.

The auto-erase bit AERS (MEMCON.6) can be set to one to perform a page erase automatically at the beginning of any write sequence. The page erase will erase the entire page, i.e. both the low and high half pages. However, the write operation paired with the auto-erase can only program one of the half pages. A second write cycle without auto-erase is required to update the other half page.

Figure 3-5. FDATA Byte Write

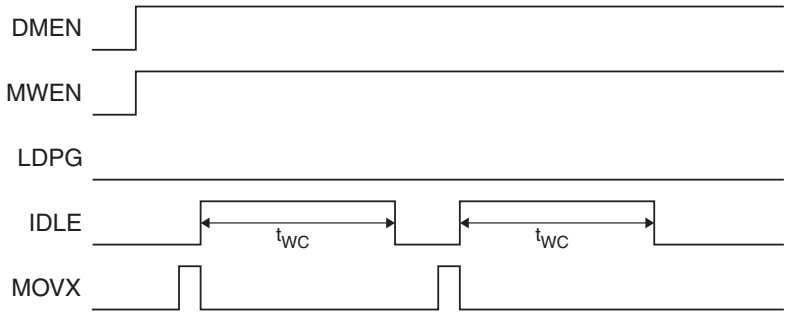

Figure 3-6. FDATA Page Write

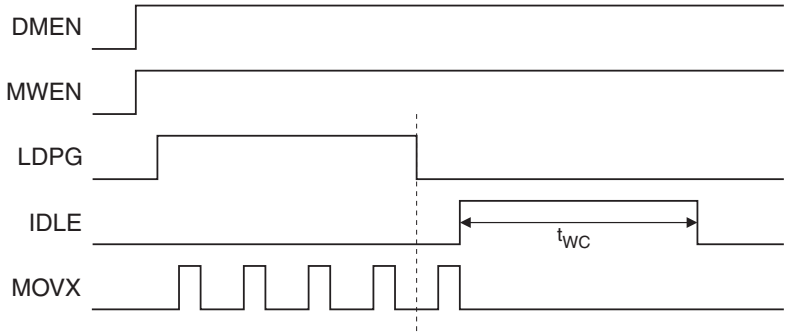

Frequently just a few bytes within a page must be updated while maintaining the state of the other bytes. There are two options for handling this situation that allow the Flash Data memory to emulate a traditional EEPROM memory. The simplest method is to copy the entire page into a buffer allocated in RAM, modify the desired byte locations in the RAM buffer, and then load and write back first the low half page (with auto-erase) and then the high half page to the Flash memory. This option requires that at least one page size of RAM is available as a temporary buffer. The second option is to store only one half page in RAM. The unmodified bytes of the other page are loaded directly into the Flash memory's temporary load buffer before loading the updated values of the modified bytes. For example, if just the low half page needs modification, the user must first store the high half page to RAM, followed by reading and loading the unaffected bytes of the low half page into the page buffer. Then the modified bytes of the low half page are stored to the page buffer before starting the auto-erase sequence. The stored value of the high half page must be written without auto-erase after the programming of the low half page completes. This method reduces the amount of RAM required; however, more software overhead is needed because the read-and-load-back routine must skip those bytes in the page that need to be updated in order to prevent those locations in the buffer from being loaded with the previous data, as this will block the new data from being loaded correctly.

A write sequence will not occur if the Brown-out Detector is active, even if the BOD reset has been disabled. In cases where the BOD reset is disabled, the user should check the BOD status by reading the $\overline{\text{WRTINH}}$ bit in MEMCON. If a write currently in progress is interrupted by the BOD due to a low voltage condition, the ERR flag will be set. FDATA can always be read regardless of the BOD state.

For more details on using the Flash Data Memory, see the application note titled "AT89LP Flash Data Memory". FDATA may also be programmed by an external device programmer (See Section 25. on page 157).

Table 3-3. MEMCON – Memory Control Register

MEMCON = 96H — Reset Value = 0000 00XXB

Not Bit Addressable

	IAP	AERS	LDPG	MWEN	DMEN	ERR	–	$\overline{\text{WRTINH}}$
Bit	7	6	5	4	3	2	1	0

Symbol	Function
IAP	In-Application Programming Enable. When IAP = 1 and the IAP Fuse is enabled, programming of the CODE/SIG space is enabled and MOVX @DPTR instructions will access CODE/SIG instead of EDATA or FDATA. Clear IAP to disable programming of CODE/SIG and allow access to EDATA and FDATA.
AERS	Auto-Erase Enable. Set to perform an auto-erase of a Flash memory page (CODE, SIG or FDATA) during the next write sequence. Clear to perform write without erase.
LDPG	Load Page Enable. Set to this bit to load multiple bytes to the temporary page buffer. Byte locations may not be loaded more than once before a write. LDPG must be cleared before writing.
MWEN	Memory Write Enable. Set to enable programming of a nonvolatile memory location (CODE, SIG or FDATA). Clear to disable programming of all nonvolatile memories.
DMEN	Data Memory Enable. Set to enable nonvolatile data memory and map it into the FDATA space. Clear to disable nonvolatile data memory.
ERR	Error Flag. Set by hardware if an error occurred during the last programming sequence due to a brownout condition (low voltage on VDD). Must be cleared by software.
$\overline{\text{WRTINH}}$	Write Inhibit Flag. Cleared by hardware when the voltage on VDD has fallen below the minimum programming voltage. Set by hardware when the voltage on VDD is above the minimum programming voltage.

3.3.4 External Memory Interface

The AT89LP3240/6440 uses the standard 8051 external memory interface with the upper address on Port 2, the lower address and data in/out multiplexed on Port 0, and the ALE, $\overline{\text{RD}}$ and $\overline{\text{WR}}$ strobes. The interface may be used in two different configurations depending on which type of MOVX instruction is used to access XDATA.

Figure 3-7 shows a hardware configuration for accessing up to 64K bytes of external RAM using a 16-bit linear address. Port 0 serves as a multiplexed address/data bus to the RAM. The Address Latch Enable strobe (ALE) is used to latch the lower address byte into an external register so that Port 0 can be freed for data input/output. Port 2 provides the upper address byte throughout the operation. The MOVX @DPTR instructions use Linear Address mode

Figure 3-7. External Memory 16-bit Linear Address Mode

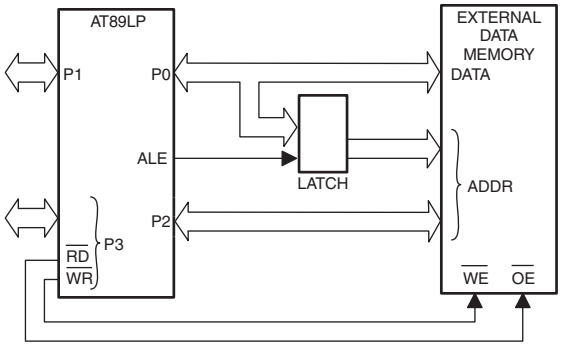

Figure 3-8 shows a hardware configuration for accessing 256-byte blocks of external RAM using an 8-bit paged address. Port 0 serves as a multiplexed address/data bus to the RAM. The ALE strobe is used to latch the address byte into an external register so that Port 0 can be freed for data input/output. The Port 2 I/O lines (or other ports) can provide control lines to page the memory; however, this operation is not handled automatically by hardware. The software application must change the Port 2 register when appropriate to access different pages. The MOVX @Ri instructions use Paged Address mode.

Figure 3-8. External Memory 8-bit Paged Address Mode

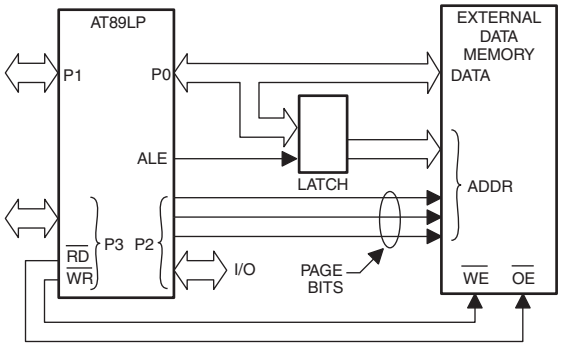

Table 3-4. AUXR – Auxiliary Control Register

AUXR = 8EH — Reset Value = xxx0 0000B

Not Bit Addressable

	–	–	–	XSTK	WS1	WS0	EXRAM	ALES
Bit	7	6	5	4	3	2	1	0

Symbol	Function
XSTK	Extended Stack Enable. When XSTK = 0 the stack resides in IDATA and is limited to 256 bytes. Set XSTK = 1 to place the stack in EDATA for up to 4K bytes of extended stack space. All PUSH, POP, CALL and RET instructions will incur a one or two cycle penalty when accessing the extended stack.
WS[1-0]	Wait State Select. Determines the number of wait states inserted into external memory accesses. WS1 / WS0 / Wait States / $\overline{RD}$ / $\overline{WR}$ Strobe Width 0 / 0 / 0 / 1 x t_{CYC} 0 / 1 / 1 / 2 x t_{CYC} 1 / 0 / 2 / 3 x t_{CYC} 1 / 1 / 3 / 4 x t_{CYC}
EXRAM	External RAM Enable. When EXRAM = 0, MOVX instructions can access the internally mapped portions of the address space. Accesses to addresses above internally mapped memory will access external memory. Set EXRAM = 1 to bypass the internal memory and map the entire address space to external memory.
ALES	ALE Idle State. When ALES = 0 the idle polarity of ALE is high (active). When ALES = 1 the idle polarity of ALE is low (inactive). The ALE strobe pulse is always active high. ALES must be zero in order to use P4.4 as a general I/O.

Note that prior to using the external memory interface, Port 2, $\overline{WR}$ (P3.6), $\overline{RD}$ (P3.7) and ALE (P4.4) must be configured as outputs. See Section 10.1 “Port Configuration” on page 45. Port 0 is configured automatically to push-pull output mode when outputting address or data and is

automatically tristated when inputting data regardless of the Port 0 configuration. The Port 0 configuration will determine the idle state of Port 0 when not accessing the external memory.

Figure 3-9 and Figure 3-10 show examples of external data memory write and read cycles, respectively. The address on P0 and P2 is stable at the falling edge of ALE. The idle polarity of ALE is controlled by ALES (AUXR.0). When ALES = 0 the idle polarity of ALE is high (active). When ALES = 1 the idle polarity of ALE is low (inactive). The ALE strobe pulse is always active high. Unlike standard 8051s, ALE will not toggle continuously when not accessing external memory. ALES must be zero in order to use P4.4 as a general-purpose I/O. The WS bits in AUXR can extended the $\overline{RD}$ and $\overline{WR}$ strobes by 1, 2 or 3 cycles as shown in Figures 3-11, 3-12 and 3-13. If a longer strobe is required, the application can scale the system clock with the clock divider to meet the requirements (See Section 6.5 on page 32).

Figure 3-9. External Data Memory Write Cycle (WS = 00B)

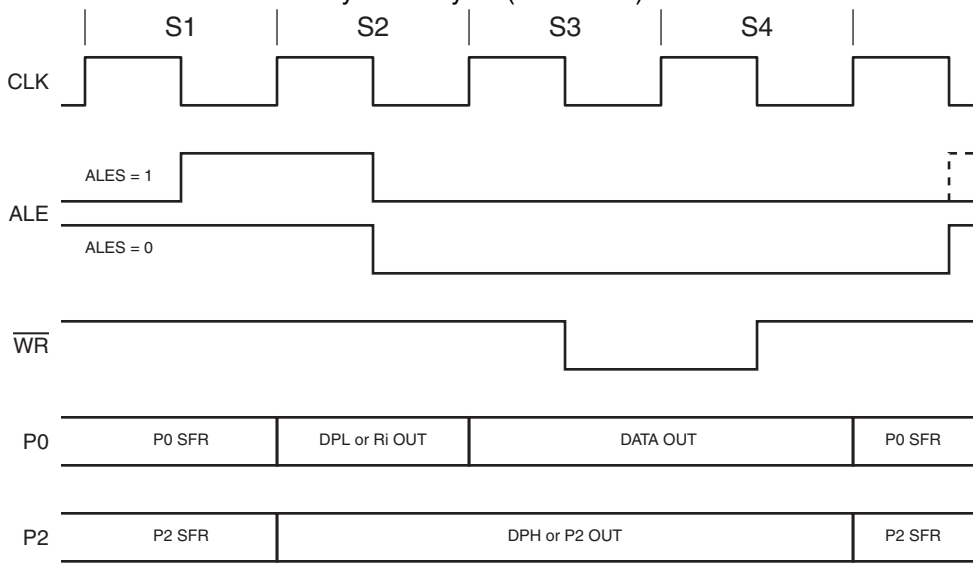

Figure 3-10. External Data Memory Read Cycle (WS = 00B)

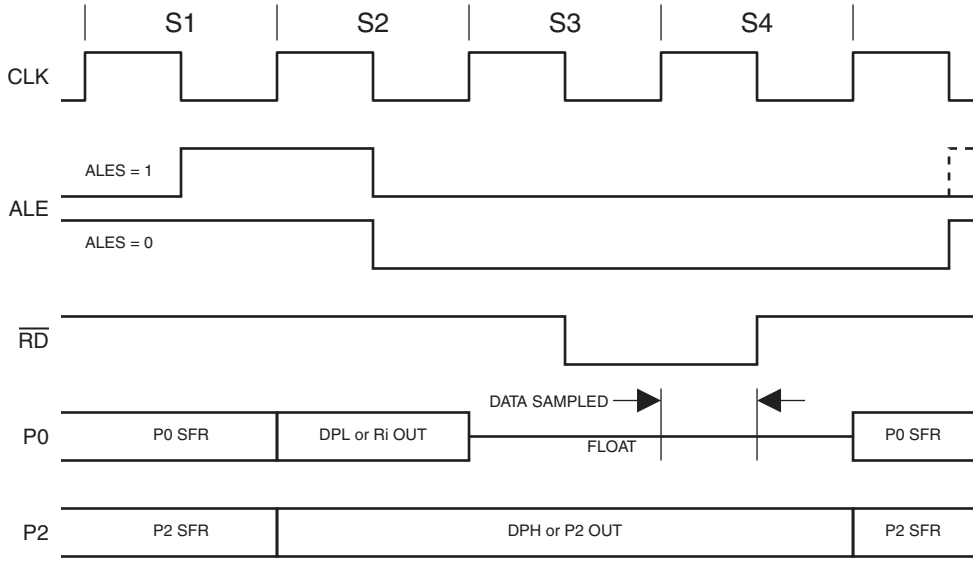

Figure 3-11. MOVX with One Wait State (WS = 01B)

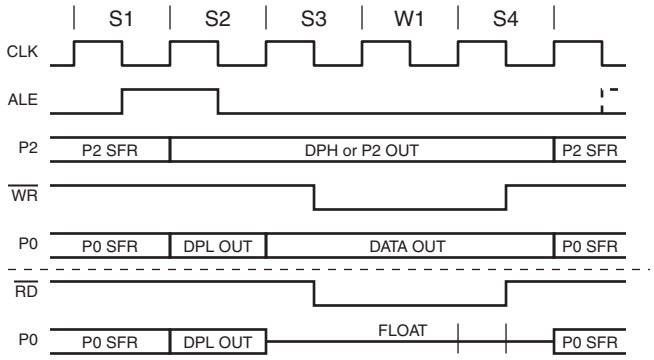

Figure 3-12. MOVX with Two Wait States (WS = 10B)

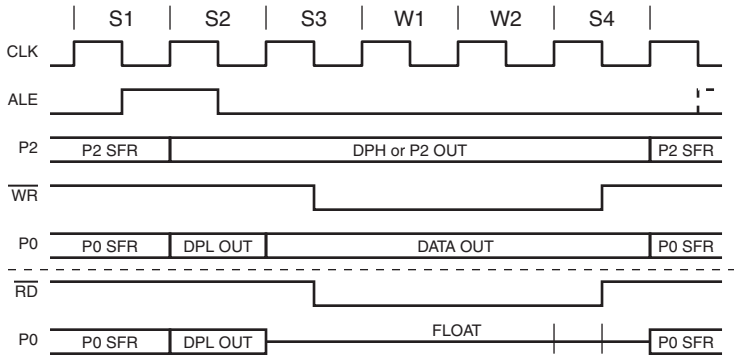

Figure 3-13. MOVX with Three Wait States (WS = 11B)

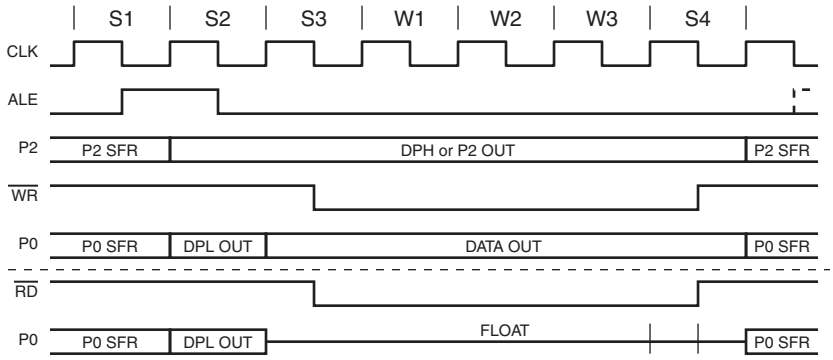

3.4 Extended Stack

The AT89LP3240/6440 provides an extended stack space for applications requiring additional stack memory. By default the stack is located in the 256-byte IDATA space of internal data memory. The IDATA stack is referenced solely by the 8-bit Stack Pointer (SP: 81H). Setting the XSTK bit in AUXR enables the extended stack. The extended stack resides in the EDATA space for up to 4KB of stack memory. The extended stack is referenced by a 12-bit pointer formed from SP and the four LSBs of the Extended Stack Pointer (SPX: 9EH) as shown in Figure 3-14. SP is shared between both stacks. Note that the standard IDATA stack will not overflow to the EDATA stack or vice versa. The stack and extended stack are mutually exclusive and SPX is ignored when XTSK = 0. An application choosing to switch between stacks by toggling XSTK must main-

tain separate copies of SP for use with each stack space. Interrupts should be disabled while swapping copies of SP in such an application to prevent illegal stack accesses.

All interrupt calls and PUSH, POP, ACALL, LCALL, RET and RETI instructions will incur a one or two-cycle penalty while the extended stack is enabled, depending on the number of stack access in each instruction. The extended stack may only exist within the internal EDATA space; it cannot be placed in XDATA. The stack will continue to use EDATA even if EDATA is disabled by setting EXRAM = 1.

Figure 3-14. Stack Configurations

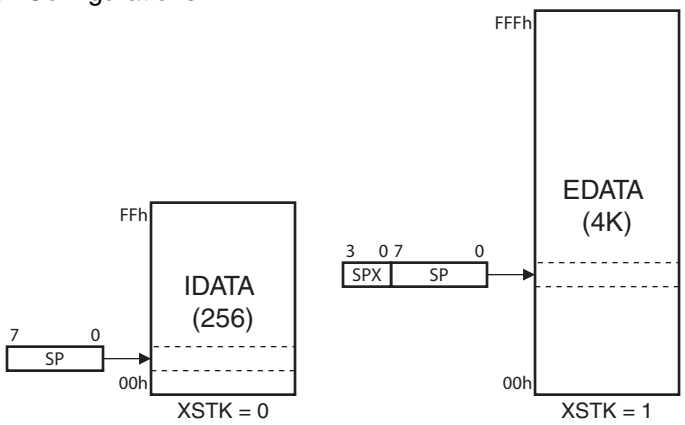

3.5 In-Application Programming (IAP)

The AT89LP3240/6440 supports In-Application Programming (IAP), allowing the program memory to be modified during execution. IAP can be used to modify the user application on the fly or to use program memory for nonvolatile data storage. The same page structure write protocol for FDATA also applies to IAP (See Section 3.3.3.1 “Write Protocol” on page 14). The CPU is always placed in idle while modifying the program memory. When the write completes, the CPU will continue executing with the instruction after the MOVX @DPTR,A instruction that started the write.

To enable access to the program memory, the IAP bit (MEMCON.7) must be set to one and the IAP User Fuse must be enabled. The IAP User Fuse can disable all IAP operations. When this fuse is disabled, the IAP bit will be forced to 0. While IAP is enabled, all MOVX @DPTR instructions will access the CODE space instead of EDATA/FDATA/XDATA. IAP also allows reprogramming of the User Signature Array when SIGEN = 1. The IAP access settings are summarized in Table 3-5.

Table 3-5. IAP Access Settings

IAP	SIGEN	DMEN	MOVX @DPTR	MOVC @DPTR
0	0	0	EDATA (0000–0FFFH)	CODE (0000–FFFFH)
0	0	1	FDATA (1000–2FFFH)	CODE (0000–FFFFH)
0	1	0	EDATA (0000–0FFFH)	SIG (0000–01FFH)
0	1	1	FDATA (1000–2FFFH)	SIG (0000–01FFH)
1	0	X	CODE (0000–FFFFH)	CODE (0000–FFFFH)
1	1	X	SIG (0000–01FFH)	SIG (0000–01FFH)

4. Special Function Registers

A map of the on-chip memory area called the Special Function Register (SFR) space is shown in Table 4-1. See also "Register Index" on page 153.

Note that not all of the addresses are occupied, and unoccupied addresses may not be implemented on the chip. Read accesses to these addresses will in general return random data, and write accesses will have an indeterminate effect. User software should not write to these unlisted locations, since they may be used in future products to invoke new features.

Table 4-1. AT89LP3240/6440 SFR Map and Reset Values

	8	9	A	B	C	D	E	F	
0F8H									0FFH
0F0H	B 0000 0000							BX 0000 0000	0F7H
0E8H	SPSR 000x x000	SPCR 0000 0000	SPDR xxxx xxxx						0EFH
0E0H	ACC 0000 0000	AX 0000 0000	DSPR 0000 0000	FIRD 0000 0000	MACL 0000 0000	MACH 0000 0000			0E7H
0D8H		DADC 0000 0000	DADI 0000 0000		DADL 0000 0000	DADH 0000 0000			0DFH
0D0H	PSW 0000 0000	T2CCA 0000 0000	T2CCL 0000 0000	T2CCH 0000 0000	T2CCC 0000 0000	T2CCF 0000 0000			0D7H
0C8H	T2CON 0000 0000	T2MOD 0000 0000	RCAP2L 0000 000	RCAP2H 0000 0000	TL2 0000 000	TH2 0000 0000			0CFH
0C0H	P4 xx11 1111		P1M0[(2)]	P1M1 0000 0000	P2M0[(2)]	P2M1 0000 0000	P3M0[(2)]	P3M1 0000 0000	0C7H
0B8H	IP 0000 0000	SADEN 0000 0000	P0M0 1111 1111	P0M1 0000 0000			P4M0[(2)]	P4M1 xx00 0000	0BFH
0B0H	P3 1111 1111				IE2 xxxx x000	IP2 xxxx x000	IP2H xxxx x000	IPH 0000 0000	0B7H
0A8H	IE 0000 0000	SADDR 0000 0000	TWCR 0000 0000	TWSR 0000 0000	TWAR 0000 0000	TWDR 0000 0000	TWBR 0000 0000	AREF 0000 0000	0AFH
0A0H	P2 1111 1111		DPCF 0000 00x0				WDTRST (write-only)	WDTCON 0000 x000	0A7H
98H	SCON 0000 0000	SBUF xxxx xxxx	GPMOD 0000 0000	GPLS 0000 0000	GPIEN 0000 0000	GPIF 0000 0000	SPX xxxx 0000	ACSRB 1100 0000	9FH
90H	P1 1111 1111	TCONB 0010 0100	RL0 0000 0000	RL1 0000 0000	RH0 0000 0000	RH1 0000 0000	MEMCON 0000 00xx	ACSRA 0000 0000	97H
88H	TCON 0000 0000	TMOD 0000 0000	TL0 0000 0000	TL1 0000 0000	TH0 0000 0000	TH1 0000 0000	AUXR 0000 0000	CLKREG 0000 x000	8FH
80H		SP 0000 0111	DP0L 0000 0000	DP0H 0000 0000	DP1L 0000 0000	DP1H 0000 0000	PAGE 0000 0000	PCON 0000 0000	87H
	0	1	2	3	4	5	6	7	

Notes: 1. All SFRs in the left-most column are bit-addressable.

2. Reset value is 1111 1111B when Tristate-Port Fuse is enabled and 0000 0000B when disabled.

5. Enhanced CPU

The AT89LP3240/6440 uses an enhanced 8051 CPU that runs at 6 to 12 times the speed of standard 8051 devices (or 3 to 6 times the speed of X2 8051 devices). The increase in performance is due to two factors. First, the CPU fetches one instruction byte from the code memory every clock cycle. Second, the CPU uses a simple two-stage pipeline to fetch and execute instructions in parallel. This basic pipelining concept allows the CPU to obtain up to 1 MIPS per MHz. A simple example is shown in Figure 5-1.

The 8051 instruction set allows for instructions of variable length from 1 to 3 bytes. In a single-clock-per-byte-fetch system this means each instruction takes at least as many clocks as it has bytes to execute. The majority of instructions in the AT89LP3240/6440 follow this rule: the instruction execution time in clock cycles equals the number of bytes per instruction, with a few exceptions. Branches and Calls require an additional cycle to compute the target address and some other complex instructions require multiple cycles. See “Instruction Set Summary” on page 143. for more detailed information on individual instructions. Figures 5-2 and 5-3 show examples of 1- and 2-byte instructions.

Figure 5-1. Parallel Instruction Fetches and Executions

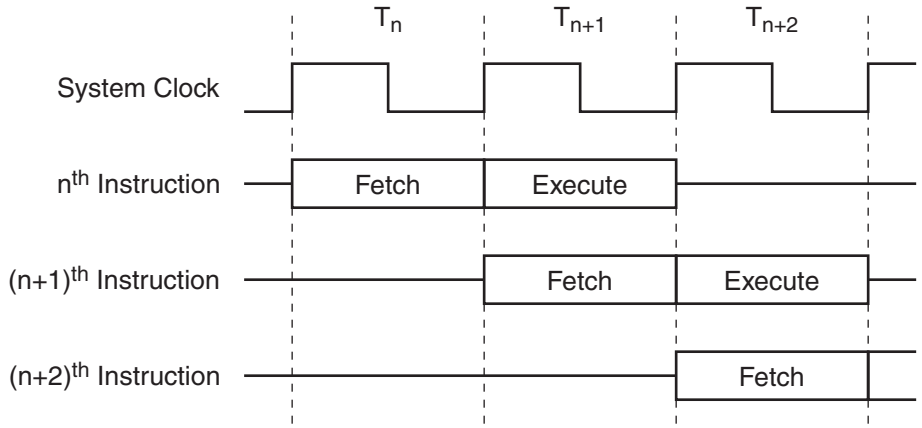

Figure 5-2. Single-cycle ALU Operation (Example: INC R0)

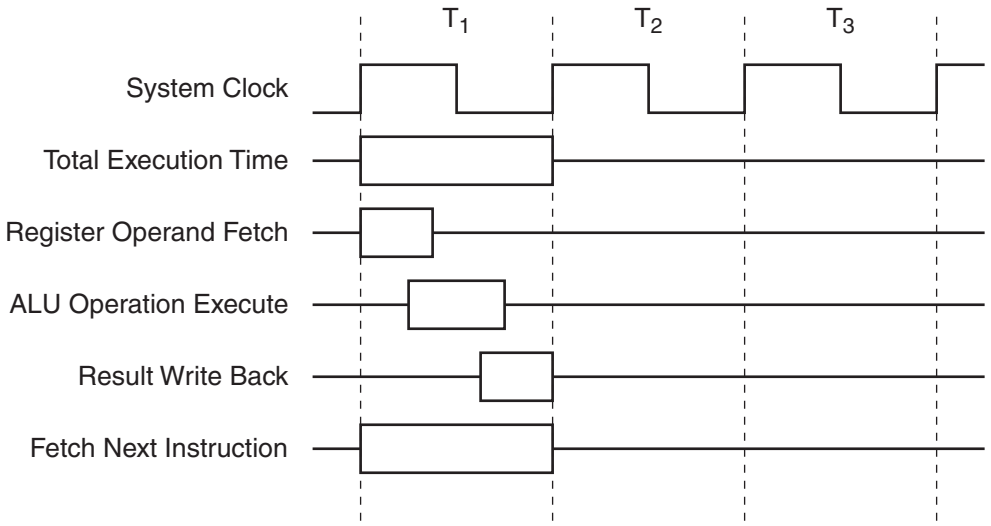

Figure 5-3. Two-cycle ALU Operation (Example: ADD A, #data)

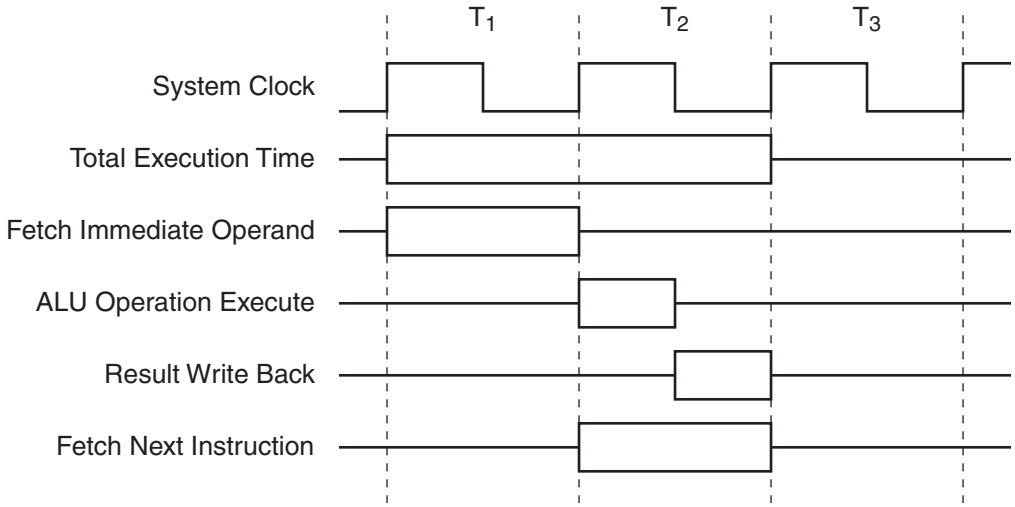

5.1 Multiply–Accumulate Unit (MAC)

The AT89LP3240/6440 includes a multiply and accumulate (MAC) unit that can significantly speed up many mathematical operations required for digital signal processing. The MAC unit includes a 16-by-16 bit multiplier and a 40-bit adder that can perform integer or fractional multiply-accumulate operations on signed 16-bit input values. The MAC unit also includes a 1-bit arithmetic shifter that will left or right shift the contents of the 40-bit MAC accumulator register (M).

A block diagram of the MAC unit is shown in Figure 5-4. The 16-bit signed operands are provided by the register pairs (AX,ACC) and (BX,B) where AX (E1H) and BX (F7H) hold the higher order bytes. The 16-by-16 bit multiplication is computed through partial products using the AT89LP3240/6440's 8-bit multiplier. The 32-bit signed product is added to the 40-bit M accumulator register. The MAC operation is summarized as follows:

$$\text{MAC AB:} \qquad M \leftarrow M + \{AX, ACC\} \times \{BX, B\}$$

All computation is done in signed two's complement form.

Figure 5-4. Multiply–Accumulate Unit

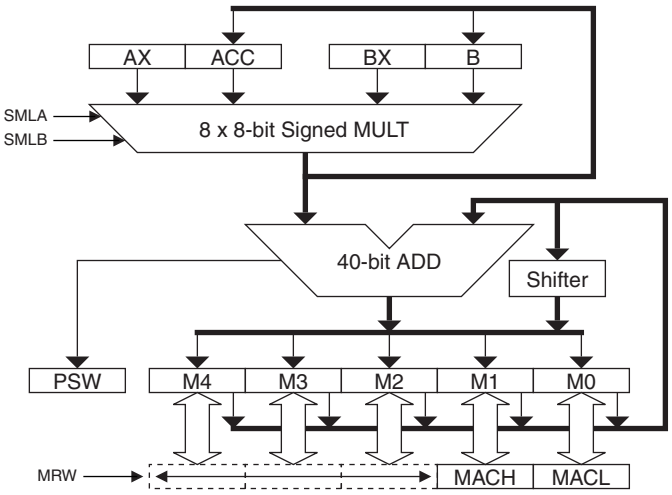

The MAC operation is performed by executing the MAC AB (A5 A4H) extended instruction. This two-byte instruction requires nine clock cycles to complete. The operand registers are not modified by the instruction and the result is stored in the 40-bit M register. MAC AB also updates the C and OV flags in PSW. C represents the sign of the MAC result and OV is the two's complement overflow. Note that MAC AB will not clear OV if it was previously set to one.

Three additional extended instructions operate directly on the M register. CLR M (A5 E4H) clears the entire 40-bit register in two clock cycles. LSL M (A5 23H) and ASR (A5 03H) shift M one bit to the left and right respectively. Right shifts are done arithmetically, i.e. the sign is preserved.

The 40-bit M register is accessible 16-bits at a time through a sliding window as shown in Figure 5-5. The MRW_{1-0} bits in DSPR (Table 5-1) select which 16-bit segment is currently accessible through the MACL and MACH addresses. For normal fixed point operations the window can be fixed to the rank of interest. For example, multiplying two 1.15 format numbers places a 2.30 format result in the M register. If MRW is set to 10B, a 1.15 value is obtained after performing a single LSL M.

Figure 5-5. M Register with Sliding Window

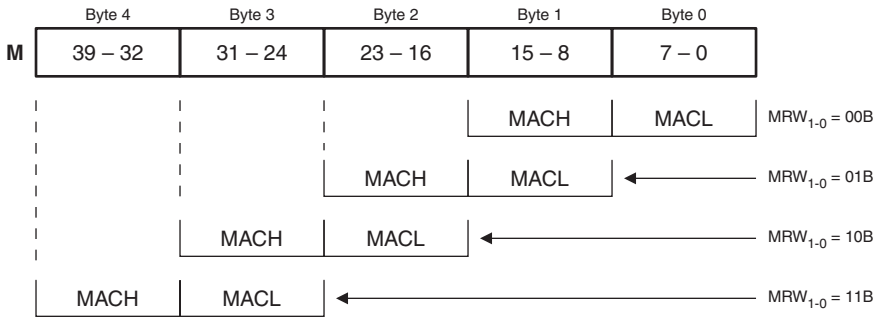

As a consequence of the MAC unit, the standard 8x8 MUL AB instruction can support signed multiplication. The SMLA and SMLB bits in DSPR control the multiplier's interpretation of the ACC and B registers, allowing any combination of signed and unsigned operand multiplication. These bits have no effect on the MAC operation which always multiplies signed-by-signed.

5.2 Enhanced Dual Data Pointers

The AT89LP3240/6440 provides two 16-bit data pointers: DPTR0 formed by the register pair DPOL and DPOH (82H an 83H), and DPTR1 formed by the register pair DP1L and DP1H (84H and 85H). The data pointers are used by several instructions to access the program or data memories. The Data Pointer Configuration Register (DPCF) controls operation of the dual data pointers (Table 5-5 on page 28). The DPS bit in DPCF selects which data pointer is currently referenced by instructions including the DPTR operand. Each data pointer may be accessed at its respective SFR addresses regardless of the DPS value. The AT89LP3240/6440 provides two methods for fast context switching of the data pointers:

- Bit 2 of DPCF is hard-wired as a logic 0. The DPS bit may be toggled (to switch data pointers) simply by incrementing the DPCF register, without altering other bits in the register unintentionally. This is the preferred method when only a single data pointer will be used at one time.

```
EX:    INC  DPCF   ; Toggle DPS
```

Table 5-1. DSPR – Digital Signal Processing Configuration Register

DSPR = E2H — Reset Value = 0000 0000B

Not Bit Addressable

	MRW1	MRW0	SMLB	SMLA	CBE1	CBE0	MVCD	DPRB
Bit	7	6	5	4	3	2	1	0

Symbol	Function
MRW_{1-0}	M Register Window. Selects which pair of bytes from the 5-byte M register is accessible through MACH (E5H) and MACL (E4H) as shown in Figure 5-5. For example, MRW = 10B for normal 16-bit fixed-point operations where the lowest order portion of the fractional result is discarded.
SMLB	Signed Multiply Operand B. When SMLB = 0, the MUL AB instruction treats the contents of B as an unsigned value. When SMLB = 1, the MUL AB instruction interprets the contents of B as a signed two's complement value. SMLB does not affect the MAC operation.
SMLA	Signed Multiply Operand A. When SMLA = 0, the MUL AB instruction treats the contents of ACC as an unsigned value. When SMLA = 1, the MUL AB instruction interprets the contents of ACC as a signed two's complement value. SMLA does not affect the MAC operation.
CBE1	DPTR1 Circular Buffer Enable. Set CBE1 = 1 to configure DPTR1 for circular addressing over the two circular buffer address ranges. Clear CBE1 for normal DPTR operation.
CBE0	DPTR0 Circular Buffer Enable. Set CBE0 = 1 to configure DPTR0 for circular addressing over the two circular buffer address ranges. Clear CBE0 for normal DPTR operation.
MVCD	MOVC Index Disable. When MVCD = 0, the MOVC A, @A+DPTR instruction functions normally with indexed addressing. Setting MVCD = 1 disables the indexed addressing mode such that MOVC A, @A+DPTR functions as MOVC A, @DPTR.
DPRB	DPTR1 Redirect to B. DPRB selects the source/destination register for MOVC/MOVX instructions that reference DPTR1. When DPRB = 0, ACC is the source/destination. When DPRB = 1, B is the source/destination. DPRB does not change the index register for MOVC instructions.

- In some cases, both data pointers must be used simultaneously. To prevent frequent toggling of DPS, the AT89LP3240/6440 supports a prefix notation for selecting the opposite data pointer per instruction. All DPTR instructions, with the exception of JMP @A+DPTR, when prefixed with an 0A5H opcode will use the inverse value of DPS ($\overline{DPS}$) to select the data pointer. Some assemblers may support this operation by using the /DPTR operand. For example, the following code performs a block copy within EDATA:

```
        MOV  DPCF, #00H      ; DPS = 0
        MOV  DPTR, #SRC      ; load source address to dptr0
        MOV  /DPTR, #DST     ; load destination address to dptr1
        MOV  R7, #BLKSIZE    ; number of bytes to copy
COPY:   MOVX A, @DPTR        ; read source (dptr0)
        INC  DPTR            ; next src (dptr0+1)
        MOVX @/DPTR, A       ; write destination (dptr1)
        INC  /DPTR           ; next dst (dptr1+1)
        DJNZ R7, COPY
```

For assemblers that do not support this notation, the 0A5H prefix must be declared in-line:

```
EX:     DB   0A5H
        INC  DPTR            ; equivalent to INC /DPTR
```

A summary of data pointer instructions with fast context switching is listed inTable 5-2.

Table 5-2. Data Pointer Instructions

Instruction	Operation	
	DPS = 0	**DPS = 1**
JMP @A+DPTR	JMP @A+DPTR0	JMP @A+DPTR1
MOV DPTR, #data16	MOV DPTR0, #data16	MOV DPTR1, #data16
MOV /DPTR, #data16	MOV DPTR1, #data16	MOV DPTR0, #data16
INC DPTR	INC DPTR0	INC DPTR1
INC /DPTR	INC DPTR1	INC DPTR0
MOVC A,@A+DPTR	MOVC A,@A+DPTR0	MOVC A,@A+DPTR1
MOVC A,@A+/DPTR	MOVC A,@A+DPTR1	MOVC A,@A+DPTR0
MOVX A,@DPTR	MOVX A,@DPTR0	MOVX A,@DPTR1
MOVX A,@/DPTR	MOVX A,@DPTR1	MOVX A,@DPTR0
MOVX @DPTR, A	MOVX @DPTR0, A	MOVX @DPTR1, A
MOVX @/DPTR, A	MOVX @DPTR1, A	MOVX @DPTR0, A

5.2.1 Data Pointer Update

The Dual Data Pointers on the AT89LP3240/6440 include two features that control how the data pointers are updated. The data pointer decrement bits, DPD1 and DPD0 in DPCF, configure the INC DPTR instruction to act as DEC DPTR. The resulting operation will depend on DPS as shown in Table 5-3.

Table 5-3. Data Pointer Decrement Behavior

DPD1	DPD0	Equivalent Operation for INC DPTR and INC /DPTR			
		DPS = 0		**DPS = 1**	
		INC DPTR	**INC /DPTR**	**INC DPTR**	**INC /DPTR**
0	0	INC DPTR0	INC DPTR1	INC DPTR1	INC DPTR0
0	1	DEC DPTR0	INC DPTR1	INC DPTR1	DEC DPTR0
1	0	INC DPTR0	DEC DPTR1	DEC DPTR1	INC DPTR0
1	1	DEC DPTR0	DEC DPTR1	DEC DPTR1	DEC DPTR0

The data pointer update bits, DPU1 and DPU0, allow MOVX @DPTR and MOVC @DPTR instructions to update the selected data pointer automatically in a post-increment or post-decrement fashion. The direction of update depends on the DPD1 and DPD0 bits as shown in Table 5-4.

Table 5-4. Data Pointer Auto-Update

DPD1	DPD0	Update Operation for MOVX and MOVC (DPU1 = 1 & DPU0 = 1)			
		DPS = 0		**DPS = 1**	
		DPTR	**/DPTR**	**DPTR**	**/DPTR**
0	0	DPTR0++	DPTR1++	DPTR1++	DPTR0++
0	1	DPTR0--	DPTR1++	DPTR1++	DPTR0--
1	0	DPTR0++	DPTR1--	DPTR1--	DPTR0++
1	1	DPTR0--	DPTR1--	DPTR1--	DPTR0--

Table 5-5. DPCF – Data Pointer Configuration Register

DPCF = A2H — Reset Value = 0000 00X0B

Not Bit Addressable

	DPU1	DPU0	DPD1	DPD0	SIGEN	0	–	DPS
Bit	7	6	5	4	3	2	1	0

Symbol	Function
DPU1	Data Pointer 1 Update. When set, MOVX @DPTR and MOVC @DPTR instructions that use DPTR1 will also update DPTR1 based on DPD1. If DPD1 = 0 the operation is post-increment and if DPD1 = 1 the operation is post-decrement. When DPU1 = 0, DPTR1 is not updated.
DPU0	Data Pointer 0 Update. When set, MOVX @DPTR and MOVC @DPTR instructions that use DPTR0 will also update DPTR0 based on DPD0. If DPD0 = 0 the operation is post-increment and if DPD0 = 1 the operation is post-decrement. When DPU0 = 0, DPTR0 is not updated.
DPD1	Data Pointer 1 Decrement. When set, INC DPTR instructions targeted to DPTR1 will decrement DPTR1. When cleared, INC DPTR instructions will increment DPTR1. DPD1 also determines the direction of auto-update for DPTR1 when DPU1 = 1.
DPD0	Data Pointer 0 Decrement. When set, INC DPTR instructions targeted to DPTR0 will decrement DPTR0. When cleared, INC DPTR instructions will increment DPTR0. DPD0 also determines the direction of auto-update for DPTR0 when DPU0 = 1.
SIGEN	Signature Enable. When SIGEN = 1 all MOVC @DPTR instructions and all IAP accesses will target the signature array memory. When SIGEN = 0, all MOVC and IAP accesses target CODE memory.
DPS	Data Pointer Select. DPS selects the active data pointer for instructions that reference DPTR. When DPS = 0, DPTR will target DPTR0 and /DPTR will target DPTR1. When DPS = 1, DPTR will target DPTR1 and /DPTR will target DPTR0.

5.2.2 Data Pointer Operating Modes

The Dual Data Pointers on the AT89LP3240/6440 include three additional operating modes that affect data pointer based instructions. These modes are controlled by bits in DSPR.

5.2.2.1 DPTR Redirect

The Data Pointer Redirect to B bit, DPRB (DSPR.0), allows MOVX and MOVC instructions to use the B register as the data source/destination when the instruction references DPTR1 as shown in Table 5-6 and Table 5-7. DPRB can improve the efficiency of routines that must fetch multiple operands from different RAM locations.

Table 5-6. MOVX @DPTR Operating Modes

		Equivalent Operation for MOVX			
		MOVX A, @DPTR		MOVX @DPTR, A	
DPRB	DPS	DPTR	/DPTR	DPTR	/DPTR
0	0	MOVX A, @DPTR0	MOVX A, @DPTR1	MOVX @DPTR0, A	MOVX @DPTR1, A
0	1	MOVX A, @DPTR1	MOVX A, @DPTR0	MOVX @DPTR1, A	MOVX @DPTR0, A
1	0	MOVX A, @DPTR0	MOVX B, @DPTR1	MOVX @DPTR0, A	MOVX @DPTR1, B
1	1	MOVX B, @DPTR1	MOVX A, @DPTR0	MOVX @DPTR1, B	MOVX @DPTR0, A

5.2.2.2 Index Disable

The MOVC Index Disable bit, MVCD (DSPR.1), disables the indexed addressing mode of the MOVC A, @A+DPTR instruction. When MVCD = 1, the MOVC instruction functions as MOVC A, @DPTR with no indexing as shown in Table 5-7. MVCD can improve the efficiency of routines that must fetch multiple operands from program memory. DPRB can change the MOVC destination register from ACC to B, but has no effect on the MOVC index register.

Table 5-7. MOVC @DPTR Operating Modes

MVCD	DPRB	Equivalent Operation for MOVC A, @A+DPTR			
		DPS = 0		DPS = 1	
		DPTR	/DPTR	DPTR	/DPTR
0	0	MOVC A, @A+DPTR0	MOVC A, @A+DPTR1	MOVC A, @A+DPTR1	MOVC A, @A+DPTR0
0	1	MOVC A, @A+DPTR0	MOVC B, @A+DPTR1	MOVC B, @A+DPTR1	MOVC A, @A+DPTR0
1	0	MOVC A, @DPTR0	MOVC A, @DPTR1	MOVC A, @DPTR1	MOVC A, @DPTR0
1	1	MOVC A, @DPTR0	MOVC B, @DPTR1	MOVC B, @DPTR1	MOVC A, @DPTR0

5.2.2.3 Circular Buffers

The CBE0 and CBE1 bits in DSPR can configure DPTR0 and DPTR1, respectively, to operate in circular buffer mode. The AT89LP3240/6440 maps circular buffers into two identically sized regions of EDATA/XDATA. These buffers can speed up convolution computations such as FIR and IAR digital filters. The length of the buffers are set by the value of the FIRD (E3H) register for up to 256 entries. Buffer A is mapped from 0000H to FIRD and Buffer B is mapped from 0100H to 100H+FIRD as shown in Figure 5-6. Both data pointers may operate in either buffer. When circular buffer mode is enabled, updates to a data pointer referencing the buffer region will follow circular addressing rules. If the data pointer is equal to FIRD or 100H+FIRD any increment will cause it to overflow to 0000H or 0100H respectively. If the data pointer is equal to 0000H or 0100H any decrement will cause it to underflow to FIRD or 100H+FIRD respectively. In this mode, updates can be either an explicit INC DPTR or an automatic update using DPU*n* where the DPD*n* bits control the direction. The data pointer will increment or decrement normally at any other addresses. Therefore, when circular addressing is in use, the data pointers can still operate as regular pointers in the FIRD+1 to 00FFH and greater than 100H+FIRD ranges.

Figure 5-6. Circular Buffer Mode

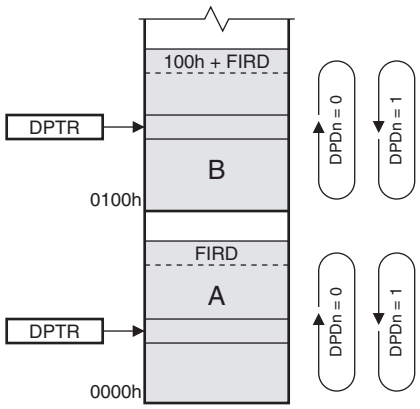

5.3 Instruction Set Extensions

Table 5-8 lists the additions to the 8051 instruction set that are supported by the AT89LP3240/6440. For more information on the instruction set see Section 22. "Instruction Set Summary" on page 143. For detailed descriptions of the extended instructions see Section 22.1 "Instruction Set Extensions" on page 147.

Table 5-8. AT89LP3240/6440 Extended Instructions

Opcode	Mnemonic	Description	Bytes	Cycles
A5 00	BREAK	Software breakpoint	2	2
A5 03	ASR M	Arithmetic shift right of M register	2	2
A5 23	LSL M	Logical shift left of M register	2	2
A5 73	JMP @A+PC	Indirect jump relative to PC	2	3
A5 90	MOV /DPTR, #data16	Move 16-bit constant to alternate data pointer	4	4
A5 93	MOVC A, @A+/DPTR	Move code location to ACC relative to alternate data pointer	2	4
A5 A3	INC /DPTR	Increment alternate data pointer	2	3
A5 A4	MAC AB	Multiply and accumulate	2	9
A5 B6	CJNE A, @R0, rel	Compare ACC to indirect RAM and jump if not equal	3	4
A5 B7	CJNE A, @R1, rel	Compare ACC to indirect RAM and jump if not equal	3	4
A5 E0	MOVX A, @/DPTR	Move external to ACC; 16-bit address in alternate data pointer	2	3/5
A5 E4	CLR M	Clear M register	2	2
A5 F0	MOVX @/DPTR, A	Move ACC to external; 16-bit address in alternate data pointer	2	3/5

- The /DPTR instructions provide support for the dual data pointer features described above (See Section 5.2).
- The ASR M, LSL M, CLR M and MAC AB instructions are part of the Multiply-Accumulate Unit (See Section 5.1).
- The JMP @A+PC instruction supports localized jump tables without using a data pointer.
- The CJNE A, @R_i, rel instructions allow compares of array values with non-constant values.
- The BREAK instruction is used by the On-Chip Debug system. See Section 24. on page 155.

6. System Clock

The system clock is generated directly from one of three selectable clock sources. The three sources are the on-chip crystal oscillator, external clock source, and internal RC oscillator. The on-chip crystal oscillator may also be configured for low or high speed operation. The clock source is selected by the Clock Source User Fuses as shown in Table 6-1. See "User Configuration Fuses" on page 164. By default, no internal clock division is used to generate the CPU clock from the system clock. However, the system clock divider may be used to prescale the system clock. The choice of clock source also affects the start-up time after a POR, BOD or Power-down event (See "Reset" on page 33 or "Power-down Mode" on page 37)

Table 6-1. Clock Source Settings

Clock Source Fuse 1	Clock Source Fuse 0	Selected Clock Source
0	0	High Speed Crystal Oscillator (f > 500 kHz)
0	1	Low Speed Crystal Oscillator (f ≤100 kHz)
1	0	External Clock on XTAL1
1	1	Internal 8 MHz RC Oscillator

6.1 Crystal Oscillator

When enabled, the internal inverting oscillator amplifier is connected between XTAL1 and XTAL2 for connection to an external quartz crystal or ceramic resonator. The oscillator may operate in either high-speed or low-speed mode. Low-speed mode is intended for 32.768 kHz watch crystals and consumes less power than high-speed mode. The configuration as shown in Figure 6-1 applies for both high and low speed oscillators. Note that the internal structure of the device adds about 10 pF of capacitance to both XTAL1 and XTAL2, so that in some cases less external capacitance may be required. The total capacitance on XTAL1 or XTAL2, including the external load capacitor plus internal device load, board trace and crystal loadings, should not exceed 20 pF. An optional resistor R1 can be connected to XTAL1 in place of C1 for improved startup performance with higher speed crystals. When using the crystal oscillator, P4.0 and P4.1 will have their inputs and outputs disabled. Also, XTAL2 in crystal oscillator mode should not be used to directly drive a board-level clock without a buffer.

Figure 6-1. Crystal Oscillator Connections

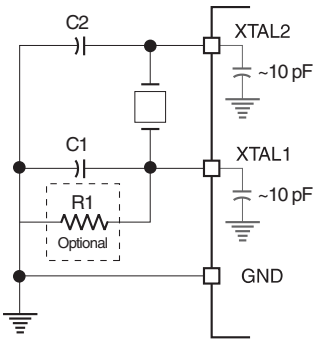

Note: 1. C1/C2 = 5–15 pF for Crystals
= 5–15 pF for Ceramic Resonators
R1 = 4–5 MΩ

6.2 External Clock Source

The external clock option disables the oscillator amplifier and allows XTAL1 to be driven directly by an external clock source as shown in Figure 6-2. XTAL2 may be left unconnected, used as general purpose I/O P4.1, or configured to output a divided version of the system clock.

Figure 6-2. External Clock Drive Configuration

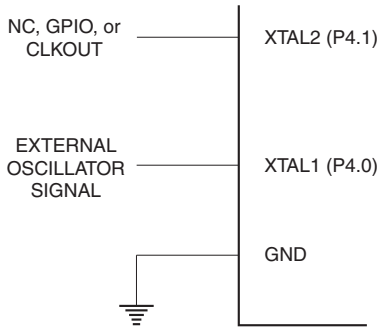

6.3 Internal RC Oscillator

The AT89LP3240/6440 has an Internal RC oscillator (IRC) tuned to 8.0 MHz ±2.5%. When enabled as the clock source, XTAL1 and XTAL2 may be used as P4.0 and P4.1 respectively. XTAL2 may also be configured to output a divided version of the system clock. The frequency of the oscillator may be adjusted within limits by changing the RC Calibration Byte stored at byte 128 of the User Signature Array. This location may be updated using the IAP interface (location 0180H in SIG space) or by an external device programmer (UROW location 0080H). See Section 25.8 “User Signature and Analog Configuration” on page 165. A copy of the factory calibration byte is stored at byte 8 of the Atmel Signature Array (0008H in SIG space).

6.4 System Clock Out

When the AT89LP3240/6440 is configured to use either an external clock or the internal RC oscillator, the system clock divided by 2 may be output on XTAL2 (P4.1). The clock out feature is enabled by setting the COE bit in CLKREG. For example, setting COE = “1” when using the internal oscillator will result in a 4.0 MHz (±2.5%) clock output on P4.1. P4.1 must be configured as an output in order to use the clock out feature.

6.5 System Clock Divider

The CDV_{2-0} bits in CLKREG allow the system clock to be divided down from the selected clock source by powers of 2. The clock divider provides users with a greater frequency range when using the Internal RC Oscillator. For example, to achieve a 1 MHz system frequency when using the IRC, CDV_{2-0} should be set to 011B for divide-by-8 operation. The divider can also be used to reduce power consumption by decreasing the operational frequency during non-critical periods. The resulting system frequency is given by the following equation:

$$f_{SYS} = \frac{f_{OSC}}{2^{CDV}}$$

where f_{OSC} is the frequency of the selected clock source. The clock divider will prescale the clock for the CPU and all peripherals. The value of CDV may be changed at any time without interrupting normal execution. Changes to CDV are synchronized such that the system clock will not

pass through intermediate frequencies. When CDV is updated, the new frequency will take affect within a maximum period of 128 x t_{OSC}.

Table 6-2. CLKREG – Clock Control Register

CLKREG = 8FH — Reset Value = 0000 0000B

Not Bit Addressable

	TPS3	TPS2	TPS1	TPS0	CDV2	CDV1	CDV0	COE
Bit	7	6	5	4	3	2	1	0

Symbol	Function
TPS[3-0]	Timer Prescaler. The Timer Prescaler selects the time base for Timer 0, Timer 1, Timer 2 and the Watchdog Timer. The prescaler is implemented as a 4-bit binary down counter. When the counter reaches zero it is reloaded with the value stored in the TPS bits to give a division ratio between 1 and 16. By default the timers will count every clock cycle (TPS = 0000B). To configure the timers to count at a standard 8051 rate of once every 12 clock cycles, TPS should be set to 1011B.
CDV[2-0]	System Clock Division. Determines the frequency of the system clock relative to the oscillator clock source. CDIV2 CDIV1 CDIV0 System Clock Frequency 0 0 0 $f_{OSC}/1$ 0 0 1 $f_{OSC}/2$ 0 1 0 $f_{OSC}/4$ 0 1 1 $f_{OSC}/8$ 1 0 0 $f_{OSC}/16$ 1 0 1 $f_{OSC}/32$ 1 1 0 $f_{OSC}/64$ 1 1 1 $f_{OSC}/128$
COE	Clock Out Enable. Set COE to output the system clock divided by 2 on XTAL2 (P4.1). The internal RC oscillator or external clock source must be selected in order to use this feature and P4.1 must be configured as an output.

7. Reset

During reset, all I/O Registers are set to their initial values, the port pins are tristated, and the program starts execution from the Reset Vector, 0000H. The AT89LP3240/6440 has five sources of reset: power-on reset, brown-out reset, external reset, watchdog reset, and software reset.

7.1 Power-on Reset

A Power-on Reset (POR) is generated by an on-chip detection circuit. The detection level V_{POR} is nominally 1.4V. The POR is activated whenever V_{DD} is below the detection level. The POR circuit can be used to trigger the start-up reset or to detect a supply voltage failure in devices without a brown-out detector. The POR circuit ensures that the device is reset from power-on. A power-on sequence is shown in Figure 7-1 on page 34. When V_{DD} reaches the Power-on Reset threshold voltage V_{POR}, an initialization sequence lasting t_{POR} is started. When the initialization sequence completes, the start-up timer determines how long the device is kept in POR after V_{DD} rise. The POR signal is activated again, without any delay, when V_{DD} falls below the POR threshold level. A Power-on Reset (i.e. a cold reset) will set the POF flag in PCON. The internally

generated reset can be extended beyond the power-on period by holding the $\overline{RST}$ pin low longer than the time-out.

Figure 7-1. Power-on Reset Sequence (BOD Disabled)

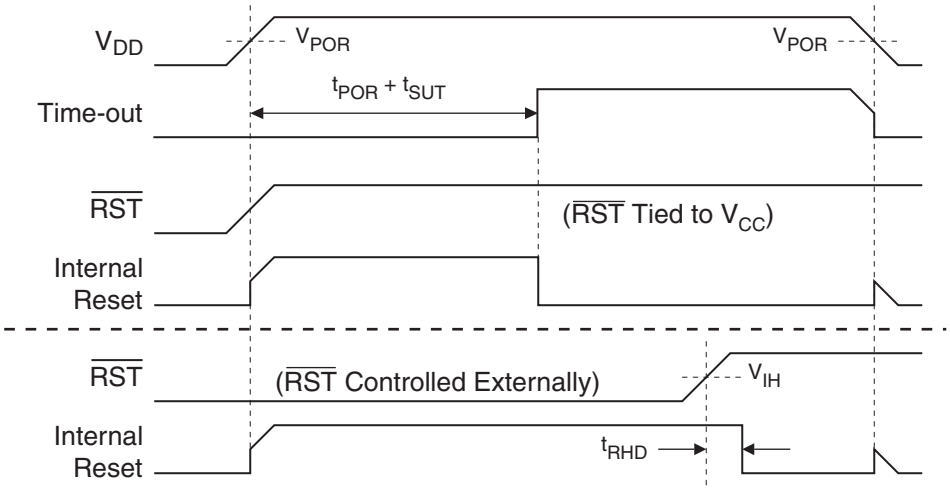

If the Brown-out Detector (BOD) is also enabled, the start-up timer does not begin counting until after V_{DD} reaches the BOD threshold voltage V_{BOD} as shown in Figure 7-2. However, if this event occurs prior to the end of the initialization sequence, the timer must first wait for that sequence to complete before counting.

Figure 7-2. Power-on Reset Sequence (BOD Enabled)

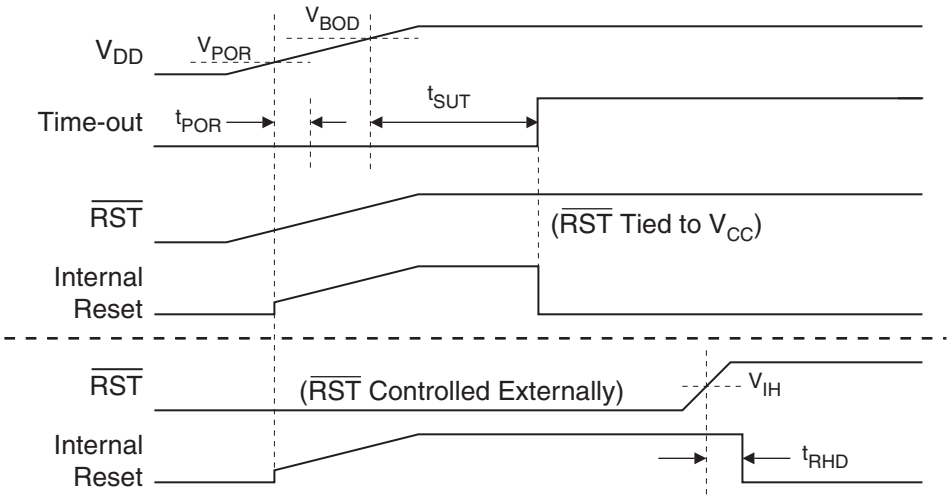

Note: t_{POR} is approximately 143 µs ± 5%.

The start-up timer delay is user-configurable with the Start-up Time User Fuses and depends on the clock source (Table 7-1). The Start-Up Time fuses also control the length of the start-up time after a Brown-out Reset or when waking up from Power-down during internally timed mode. The start-up delay should be selected to provide enough settling time for V_{DD} and the selected clock source. The device operating environment (supply voltage, frequency, temperature, etc.) must

meet the minimum system requirements before the device exits reset and starts normal operation. The $\overline{RST}$ pin may be held low externally until these conditions are met.

Table 7-1. Start-up Timer Settings

SUT Fuse 1	SUT Fuse 0	Clock Source	t_{SUT} (± 5%) µs
0	0	Internal RC/External Clock	16
		Crystal Oscillator	1024
0	1	Internal RC/External Clock	512
		Crystal Oscillator	2048
1	0	Internal RC/External Clock	1024
		Crystal Oscillator	4096
1	1	Internal RC/External Clock	4096
		Crystal Oscillator	16384

7.2 Brown-out Reset

The AT89LP3240/6440 has an on-chip Brown-out Detection (BOD) circuit for monitoring the V_{DD} level during operation by comparing it to a fixed trigger level. The trigger level V_{BOD} for the BOD is nominally 2.0V. The purpose of the BOD is to ensure that if V_{DD} fails or dips while executing at speed, the system will gracefully enter reset without the possibility of errors induced by incorrect execution. A BOD sequence is shown in Figure 7-3. When V_{DD} decreases to a value below the trigger level V_{BOD}, the internal reset is immediately activated. When V_{DD} increases above the trigger level plus about 200 mV of hysteresis, the start-up timer releases the internal reset after the specified time-out period has expired (Table 7-1). The Brown-out Detector must be enabled by setting the BOD Enable Fuse. (See “User Configuration Fuses” on page 164.)

Figure 7-3. Brown-out Detector Reset

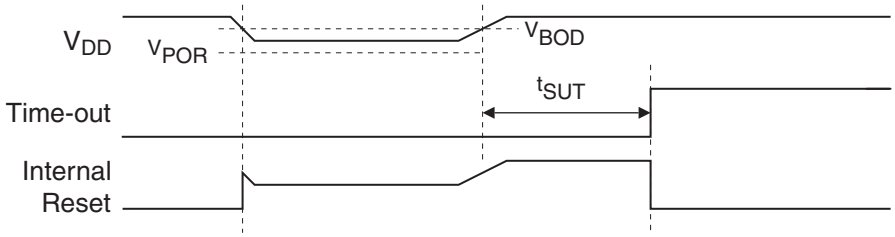

The AT89LP3240/6440 allows for a wide V_{DD} operating range. The on-chip BOD may not be sufficient to prevent incorrect execution if V_{BOD} is lower than the minimum required V_{DD} range, such as when a 3.6V supply is coupled with high frequency operation. In such cases an external Brown-out Reset circuit connected to the $\overline{RST}$ pin may be required.

7.3 External Reset

The P4.2/$\overline{RST}$ pin can function as either an active-**LOW** reset input or as a digital general-purpose I/O, P4.2. The Reset Pin Enable Fuse, when set to “1”, enables the external reset input function on P4.2. (See “User Configuration Fuses” on page 164.) When cleared, P4.2 may be used as an input or output pin. When configured as a reset input, the pin must be held low for at least two clock cycles to trigger the internal reset. The $\overline{RST}$ pin includes an on-chip pull-up resistor tied to V_{DD}. The pull-up is disabled when the pin is configured as P4.2.

Note: During a power-up sequence, the fuse selection is always overridden and therefore the pin will always function as a reset input. **An external circuit connected to this pin should not hold this pin LOW during a power-on sequence if the pin will be configured as a general I/O, as this will keep the device in reset until the pin transitions high**. After the power-up delay, this input will function either as an external reset input or as a digital input as defined by the fuse bit. Only a power-up reset will temporarily override the selection defined by the reset fuse bit. Other sources of reset will not override the reset fuse bit. P4.2/$\overline{\text{RST}}$ also serves as the In-System Programming (ISP) enable. ISP is enabled when the external reset pin is held low. When the reset pin is disabled by the fuse, ISP may only be entered by pulling P4.2 low during power-up.

7.4 Watchdog Reset

When the Watchdog times out, it will generate an internal reset pulse lasting 16 clock cycles. Watchdog reset will also set the WDTOVF flag in WDTCON. To prevent a Watchdog reset, the watchdog reset sequence 1EH/E1H must be written to WDTRST before the Watchdog times out. See “Programmable Watchdog Timer” on page 141. for details on the operation of the Watchdog.

7.5 Software Reset

The CPU may generate an internal 16-clock cycle reset pulse by writing the software reset sequence 5AH/A5H to the WDRST register. A software reset will set the SWRST bit in WDTCON. See “Software Reset” on page 142 for more information on software reset. Writing any sequences other than 5AH/A5H or 1EH/E1H to WDTRST will generate an immediate reset and set both WDTOVF and SWRST to flag an error.

8. Power Saving Modes

The AT89LP3240/6440 supports two different power-reducing modes: Idle and Power-down. These modes are accessed through the PCON register. Additional steps may be required to achieve the lowest possible power consumption while using these modes.

8.1 Idle Mode

Setting the IDL bit in PCON enters idle mode. Idle mode halts the internal CPU clock. The CPU state is preserved in its entirety, including the RAM, stack pointer, program counter, program status word, and accumulator. The Port pins hold the logic states they had at the time that Idle was activated. Idle mode leaves the peripherals running in order to allow them to wake up the CPU when an interrupt is generated. The timers, UART, SPI, TWI, comparators, ADC, GPI and CCA peripherals continue to function during Idle. If these functions are not needed during idle, they should be explicitly disabled by clearing the appropriate control bits in their respective SFRs. The watchdog may be selectively enabled or disabled during Idle by setting/clearing the WDIDLE bit. The Brown-out Detector, if enabled, is always active during Idle. Any enabled interrupt source or reset may terminate Idle mode. When exiting Idle mode with an interrupt, the interrupt will immediately be serviced, and following RETI the next instruction to be executed will be the one following the instruction that put the device into Idle.

The power consumption during Idle mode can be further reduced by prescaling down the system clock using the System Clock Divider (Section 6.5 on page 32). Be aware that the clock divider will affect all peripheral functions except the ADC. Therefore baud rates or PWM periods may need to be adjusted to maintain their rate with the new clock frequency.

Table 8-1. PCON – Power Control Register

PCON = 87H — Reset Value = 000X 0000B

Not Bit Addressable

	SMOD1	SMOD0	PWDEX	POF	GF1	GF0	PD	IDL
Bit	7	6	5	4	3	2	1	0

Symbol	Function
SMOD1	Double Baud Rate bit. Doubles the baud rate of the UART in Modes 1, 2, or 3.
SMOD0	Frame Error Select. When SMOD0 = 1, SCON.7 is SM0. When SMOD0 = 1, SCON.7 is FE. Note that FE will be set after a frame error regardless of the state of SMOD0.
PWDEX	Power-down Exit Mode. When PWDEX = 1, wake up from Power-down is externally controlled. When PWDEX = 1, wake up from Power-down is internally timed.
POF	Power Off Flag. POF is set to “1” during power up (i.e. cold reset). It can be set or reset under software control and is not affected by RST or BOD (i.e. warm resets).
GF1, GF0	General-purpose Flags
PD	Power-down bit. Setting this bit activates power-down operation. The PD bit is cleared automatically by hardware when waking up from power-down.
IDL	Idle Mode bit. Setting this bit activates Idle mode operation. The IDL bit is cleared automatically by hardware when waking up from idle

8.2 Power-down Mode

Setting the Power-down (PD) bit in PCON enters Power-down mode. Power-down mode stops the oscillator, disables the BOD and powers down the Flash memory in order to minimize power consumption. Only the power-on circuitry will continue to draw power during Power-down. During Power-down, the power supply voltage may be reduced to the RAM keep-alive voltage. The RAM contents will be retained, but the SFR contents are not guaranteed once V_{DD} has been reduced. Power-down may be exited by external reset, power-on reset, or certain enabled interrupts.

8.2.1 Interrupt Recovery from Power-down

Three external interrupt sources may be configured to terminate Power-down mode: external interrupts $\overline{INT0}$ (P3.2) and $\overline{INT1}$ (P3.3); and the general-purpose interrupts (GPI). To wake up by external interrupt $\overline{INT0}$ or $\overline{INT1}$, that interrupt must be enabled by setting EX0 or EX1 in IE and must be configured for level-sensitive operation by clearing IT0 or IT1. Any General-purpose interrupt on Port 1 (GPI_{7-0}) can also wake up the device. The GPI pin must be enabled in GPIEN and configured for level-sensitive detection, and EGP in IE2 must be set in order to terminate Power-down.

When terminating Power-down by an interrupt, two different wake-up modes are available. When PWDEX in PCON is zero, the wake-up period is internally timed as shown in Figure 8-1. At the falling edge on the interrupt pin, Power-down is exited, the oscillator is restarted, and an internal timer begins counting. The internal clock will not be allowed to propagate to the CPU until after the timer has timed out. After the time-out period the interrupt service routine will begin. The time-out period is controlled by the Start-up Timer Fuses (see Table 7-1 on page 35). The interrupt pin need not remain low for the entire time-out period.

Figure 8-1. Interrupt Recovery from Power-down (PWDEX = 0)

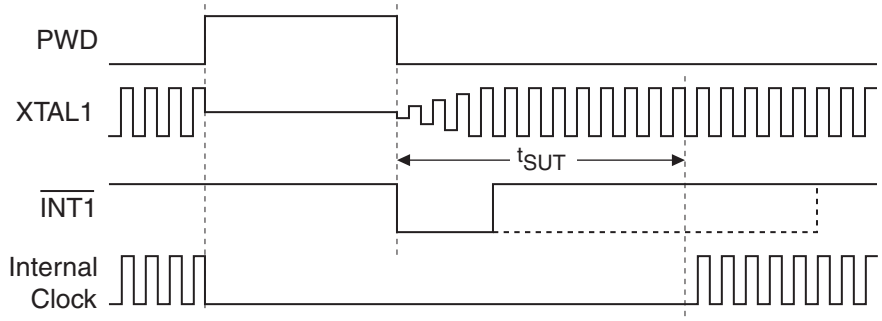

When PWDEX = “1”, the wake-up period is controlled externally by the interrupt. Again, at the falling edge on the interrupt pin, power-down is exited and the oscillator is restarted. However, the internal clock will not propagate until the rising edge of the interrupt pin as shown in Figure 8-2. The interrupt pin should be held low long enough for the selected clock source to stabilize. After the rising edge on the pin the interrupt service routine will be executed.

Figure 8-2. Interrupt Recovery from Power-down (PWDEX = 1)

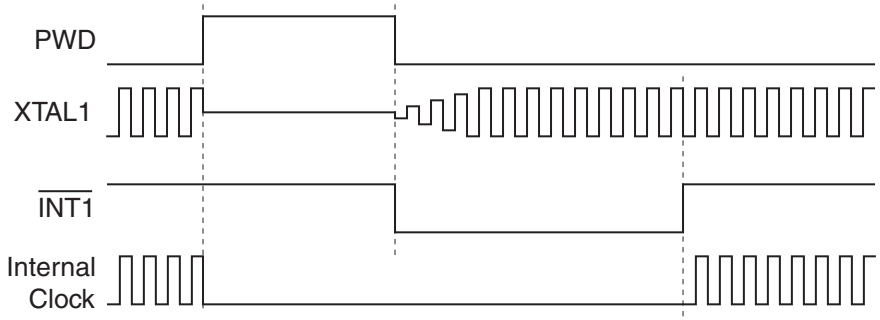

8.2.2 Reset Recovery from Power-down

The wake-up from Power-down through an external reset is similar to the interrupt with PWDEX = “0”. At the falling edge of $\overline{RST}$, Power-down is exited, the oscillator is restarted, and an internal timer begins counting as shown in Figure 8-3. The internal clock will not be allowed to propagate to the CPU until after the timer has timed out. The time-out period is controlled by the Start-up Timer Fuses. (See Table 7-1 on page 35). If $\overline{RST}$ returns high before the time-out, a two clock cycle internal reset is generated when the internal clock restarts. Otherwise, the device will remain in reset until $\overline{RST}$ is brought high.

8.3 Reducing Power Consumption

Several possibilities need consideration when trying to reduce the power consumption in an AT89LP-based system. Generally, Idle or Power-down mode should be used as much as possible. All unneeded functions should be disabled. In particular, the following modules may need special consideration when trying to achieve the lowest possible power consumption.

8.3.1 Brown-out Detector

If the Brown-out Detector is not needed by the application, this module should be turned off. If the Brown-out Detector is enabled by the BOD Enable Fuse, it will be enabled in all modes except Power-down. See Section 25.7 “User Configuration Fuses” on page 164.

Figure 8-3. Reset Recovery from Power-down

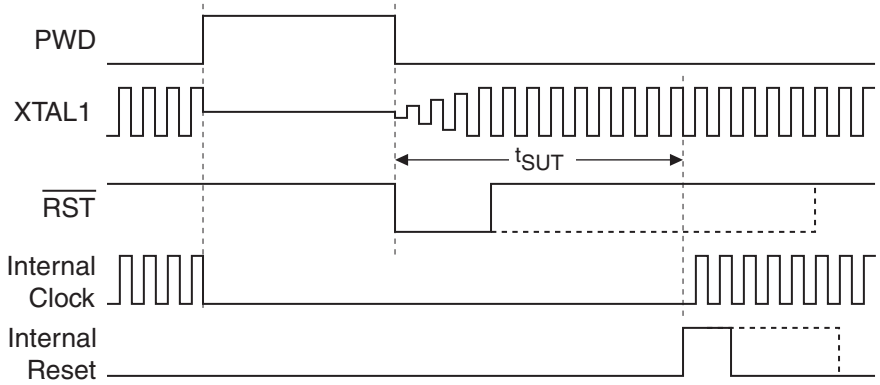

8.3.2 Analog Comparators

The comparators will operate during Idle mode if enabled. To save power, the comparators should be disabled before entering Idle mode if possible. When the comparators are turned off and on again, some settling time is required for the analog circuits to stabilize. If the comparators are enabled, they will consume the least power when using an external reference, RFA_{1-0} = 00B and RFB_{1-0} = 00B.

8.3.3 Analog-to-Digital Converter

The DADC will operate during Idle mode if enabled. To save power, the DADC should be disabled before entering Idle mode if possible. When the DADC is turned off and on again, some settling time is required for the analog circuits to stabilize. If the DADC is enabled, it will consume the least power when configured to use the system clock instead of the internal RC oscillator (unless the IRC is the system clock source) and when the internal reference is disabled (IREF = 0). The DADC must always be disabled before entering power-down.

9. Interrupts

The AT89LP3240/6440 provides 12 interrupt sources: two external interrupts, three timer interrupts, a serial port interrupt, an analog comparator interrupt, a general-purpose interrupt, a compare/capture interrupt, a two-wire interrupt, an ADC interrupt and an SPI interrupt. These interrupts and the system reset each have a separate program vector at the start of the program memory space. Each interrupt source can be individually enabled or disabled by setting or clearing a bit in the interrupt enable registers IE and IE2. The IE register also contains a global disable bit, EA, which disables all interrupts.

Each interrupt source can be individually programmed to one of four priority levels by setting or clearing bits in the interrupt priority registers IP, IPH, IP2 and IP2H. IP and IP2 hold the low order priority bits and IPH and IP2H hold the high priority bits for each interrupt. An interrupt service routine in progress can be interrupted by a higher priority interrupt, but not by another interrupt of the same or lower priority. The highest priority interrupt cannot be interrupted by any other interrupt source. If two requests of different priority levels are pending at the end of an instruction, the request of higher priority level is serviced. If requests of the same priority level are pending at the end of an instruction, an internal polling sequence determines which request is serviced. The polling sequence is based on the vector address; an interrupt with a lower vector address has higher priority than an interrupt with a higher vector address. Note that the polling sequence is only used to resolve pending requests of the same priority level.

The IP*x*D bits located at the seventh bit of IP, IPH, IP2 and IP2H can be used to disable all interrupts of a given priority level, allowing software implementations of more complex interrupt priority handling schemes such as level-based round-robin scheduling.

The External Interrupts $\overline{\text{INT0}}$ and $\overline{\text{INT1}}$ can each be either level-activated or edge-activated, depending on bits IT0 and IT1 in Register TCON. The flags that actually generate these interrupts are the IE0 and IE1 bits in TCON. When the service routine is vectored to, hardware clears the flag that generated an external interrupt only if the interrupt was edge-activated. If the interrupt was level activated, then the external requesting source (rather than the on-chip hardware) controls the request flag.

The Timer 0 and Timer 1 Interrupts are generated by TF0 and TF1, which are set by a rollover in their respective Timer/Counter registers (except for Timer 0 in Mode 3). When a timer interrupt is generated, the on-chip hardware clears the flag that generated it when the service routine is vectored to. The Timer 2 Interrupt is generated by a logic OR of bits TF2 and EXF2 in register T2CON. Neither of these flags is cleared by hardware when the CPU vectors to the service routine. The service routine normally must determine whether TF2 or EXF2 generated the interrupt and that bit must be cleared by software.

The Serial Port Interrupt is generated by the logic OR of RI and TI in SCON. Neither of these flags is cleared by hardware when the CPU vectors to the service routine. The service routine normally must determine whether RI or TI generated the interrupt and that bit must be cleared by software.

The Serial Peripheral Interface Interrupt is generated by the logic OR of SPIF, MODF and TXE in SPSR. None of these flags is cleared by hardware when the CPU vectors to the service routine. The service routine normally must determine which bit generated the interrupt and that bit must be cleared by software.

A logic OR of all eight flags in the GPIF register causes the General-purpose Interrupt. None of these flags is cleared by hardware when the service routine is vectored to. The service routine must determine which bit generated the interrupt and that bit must be cleared in software. If the interrupt was level activated, then the external requesting source must de-assert the interrupt before the flag may be cleared by software.

The CFA and CFB bits in ACSRA and ACSRB respectively generate the Comparator Interrupt. The service routine must normally determine whether CFA or CFB generated the interrupt, and the bit must be cleared by software. The DAC/ADC Conversion Interrupt is generated by ADIF in DADC. On-chip hardware clears the ADIF flag when vectoring to the service routine.

A logic OR of the four least significant bits in the T2CCF register causes the Compare/Capture Array Interrupt. None of these flags is cleared by hardware when the service routine is vectored to. The service routine must determine which bit generated the interrupt and that bit must be cleared in software.

The Two-Wire Interface Interrupt is generated by TWIF in TWCR. The flag is not cleared by hardware when the CPU vectors to the service routine. The service routine normally must determine the status in TWSR and respond accordingly before the bit is cleared by software.

All of the bits that generate interrupts can be set or cleared by software, with the same result as though they had been set or cleared by hardware. That is, interrupts can be generated and pending interrupts can be canceled in software.

Table 9-1. Interrupt Vector Addresses

Interrupt	Source	Vector Address
System Reset	RST or POR or BOD	0000H
External Interrupt 0	IE0	0003H
Timer 0 Overflow	TF0	000BH
External Interrupt 1	IE1	0013H
Timer 1 Overflow	TF1	001BH
Serial Port Interrupt	RI or TI	0023H
Timer 2 Interrupt	TF2 or EXF2	002BH
Analog Comparator Interrupt	CFA or CFB	0033H
General-purpose Interrupt	$GPIF_{7-0}$	003BH
Compare/Capture Array Interrupt	$T2CCF_{3-0}$	0043H
Serial Peripheral Interface Interrupt	SPIF or MODF or TXE	004BH
ADC Interrupt	ADIF	0053H
Two-Wire Interface Interrupt	TWIF	005BH

9.1 Interrupt Response Time

The interrupt flags may be set by their hardware in any clock cycle. The interrupt controller polls the flags in the last clock cycle of the instruction in progress. If one of the flags was set in the preceding cycle, the polling cycle will find it and the interrupt system will generate an LCALL to the appropriate service routine as the next instruction, provided that the interrupt is not blocked by any of the following conditions: an interrupt of equal or higher priority level is already in progress; the instruction in progress is RETI or any write to the IE, IP, IPH, IE2, IP2 or IP2H registers; the CPU is currently forced into idle by an IAP or FDATA write. Each of these conditions will block the generation of the LCALL to the interrupt service routine. The second condition ensures that if the instruction in progress is RETI or any access to IE, IP, IPH, IE2, IP2 or IP2H, then at least one more instruction will be executed before any interrupt is vectored to. The polling cycle is repeated at the last cycle of each instruction, and the values polled are the values that were present at the previous clock cycle. If an active interrupt flag is not being serviced because of one of the above conditions and is no longer active when the blocking condition is removed, the denied interrupt will not be serviced. In other words, the fact that the interrupt flag was once active but not serviced is not remembered. Every polling cycle is new.

If a request is active and conditions are met for it to be acknowledged, a hardware subroutine call to the requested service routine will be the next instruction executed. The call itself takes four cycles. Thus, a minimum of five complete clock cycles elapsed between activation of an interrupt request and the beginning of execution of the first instruction of the service routine. A longer response time results if the request is blocked by one of the previously listed conditions. If an interrupt of equal or higher priority level is already in progress, the additional wait time depends on the nature of the other interrupt's service routine. If the instruction in progress is not in its final clock cycle, the additional wait time cannot be more than 8 cycles, since the longest instruction is 9 cycles long. If the instruction in progress is RETI with XSTK, the additional wait time cannot be more than 14 cycles (a maximum of 5 more cycles to complete the instruction in progress, plus a maximum of 9 cycles to complete the next instruction). Thus, in a single-inter-

rupt system, the response time is always more than 5 clock cycles and less than 21 clock cycles. See Figure 9-1 and Figure 9-2.

Figure 9-1. Minimum Interrupt Response Time

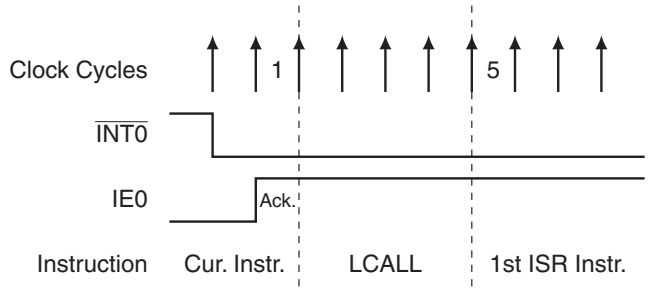

Figure 9-2. Maximum Interrupt Response Time

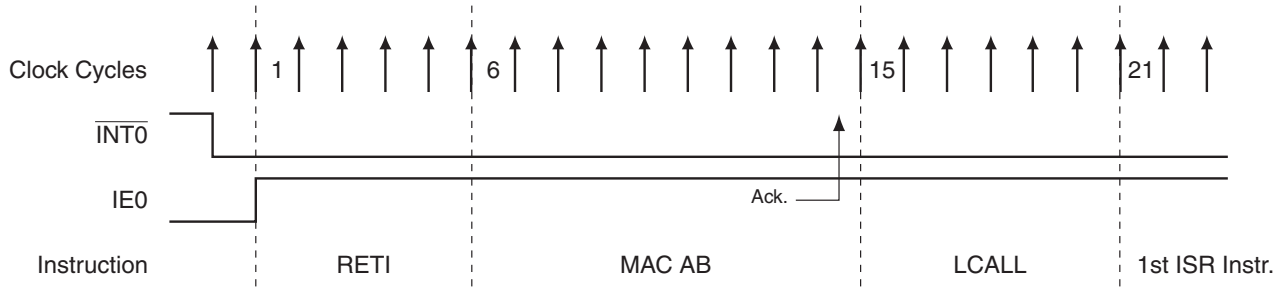

Table 9-2. IE – Interrupt Enable Register

IE = A8H — Reset Value = 0000 0000B

Bit Addressable

	EA	EC	ET2	ES	ET1	EX1	ET0	EX0
Bit	7	6	5	4	3	2	1	0

Symbol	Function
EA	Global enable/disable. All interrupts are disabled when EA = 0. When EA = 1, each interrupt source is enabled/disabled by setting /clearing its own enable bit.
EC	Comparator Interrupt Enable
ET2	Timer 2 Interrupt Enable
ES	Serial Port Interrupt Enable
ET1	Timer 1 Interrupt Enable
EX1	External Interrupt 1 Enable
ET0	Timer 0 Interrupt Enable
EX0	External Interrupt 0 Enable

Table 9-3. IE2 – Interrupt Enable 2 Register

IE = B4H — Reset Value = xxxx x000B

Not Bit Addressable

	–	–	–	ETWI	EADC	ESPI	ECC	EGP
Bit	7	6	5	4	3	2	1	0

Symbol	Function
ETWI	Two-Wire Interface Interrupt Enable
EADC	ADC Interrupt Enable
ESPI	Serial Peripheral Interface Interrupt Enable
ECC	Compare/Capture Array Interrupt Enable
EGP	General-purpose Interrupt Enable

Table 9-4. IP – Interrupt Priority Register

IP = B8H — Reset Value = 0000 0000B

Bit Addressable

	IP0D	PC	PT2	PS	PT1	PX1	PT0	PX0
Bit	7	6	5	4	3	2	1	0

Symbol	Function
IP0D	Interrupt Priority 0 Disable. Set IP0D to 1 to disable all interrupts with priority level zero. Clear to 0 to enable all interrupts with priority level zero when EA = 1.
PC	Comparator Interrupt Priority Low
PT2	Timer 2 Interrupt Priority Low
PS	Serial Port Interrupt Priority Low
PT1	Timer 1 Interrupt Priority Low
PX1	External Interrupt 1 Priority Low
PT0	Timer 0 Interrupt Priority Low
PX0	External Interrupt 0 Priority Low

Table 9-5. IP2 – Interrupt Priority 2 Register

IP = B5H — Reset Value = 0xxx x000B

No Bit Addressable

	IP2D	–	–	PTWI	PADC	PSP	PCC	PGP
Bit	7	6	5	4	3	2	1	0

Symbol	Function
IP2D	Interrupt Priority 2 Disable. Set IP2D to 1 to disable all interrupts with priority level two. Clear to 0 to enable all interrupts with priority level two when EA = 1.
PTWI	Two-wire Interface Interrupt Priority Low
PADC	ADC Interrupt Priority Low

Symbol	Function
PSP	Serial Peripheral Interface Interrupt Priority Low
PCC	Compare/Capture Array Interrupt Priority Low
PGP	General-purpose Interrupt 0 Priority Low

Table 9-6. IPH – Interrupt Priority High Register

IPH = B7H — Reset Value = 0000 0000B

Not Bit Addressable

	IP1D	PCH	PT2H	PSH	PT1H	PX1H	PT0H	PX0H
Bit	7	6	5	4	3	2	1	0

Symbol	Function
IP1D	Interrupt Priority 1 Disable. Set IP1D to 1 to disable all interrupts with priority level one. Clear to 0 to enable all interrupts with priority level one when EA = 1.
PCH	Comparator Interrupt Priority High
PT2H	Timer 2 Interrupt Priority High
PSH	Serial Port Interrupt Priority High
PT1H	Timer 1 Interrupt Priority High
PX1H	External Interrupt 1 Priority High
PT0H	Timer 0 Interrupt Priority High
PX0H	External Interrupt 0 Priority High

Table 9-7. IP2H – Interrupt Priority 2 High Register

IPH = B6H — Reset Value = 0xxx x000B

Not Bit Addressable

	IP3D	–	–	PTWH	PADH	PSPH	PCCH	PGPH
Bit	7	6	5	4	3	2	1	0

Symbol	Function
IP3D	Interrupt Priority 3 Disable. Set IP3D to 1 to disable all interrupts with priority level three. Clear to 0 to enable all interrupts with priority level three when EA = 1.
PTWH	Two-Wire Interface Interrupt Priority High
PADH	ADC Interrupt Priority High
PSPH	Serial Peripheral Interface Interrupt Priority High
PCCH	Compare/Capture Array Interrupt Priority High
PGPH	General-purpose Interrupt 0 Priority High

10. I/O Ports

The AT89LP3240/6440 can be configured for between 35 and 38 I/O pins. The exact number of I/O pins available depends on the clock and reset options as shown in Table 10-1.

Table 10-1. I/O Pin Configurations

Clock Source	Reset Option	Number of I/O Pins
External Crystal or Resonator	External $\overline{RST}$ Pin	35
	No external reset	36
External Clock	External $\overline{RST}$ Pin	36
	No external reset	37
Internal RC Oscillator	External $\overline{RST}$ Pin	37
	No external reset	38

10.1 Port Configuration

All port pins on the AT89LP3240/6440 may be configured to one of four modes: quasi-bidirectional (standard 8051 port outputs), push-pull output, open-drain output, or input-only. Port modes may be assigned in software on a pin-by-pin basis as shown in Table 10-2 using the registers listed in Table 10-3. The Tristate-Port User Fuse determines the default state of the port pins. When the fuse is enabled, all port pins default to input-only mode after reset. When the fuse is disabled, all port pins, with the exception of the analog inputs, P0.7-0, P2.4, P2.5, P2.6 and P2.7, default to quasi-bidirectional mode after reset and are weakly pulled high. The analog input pins always reset to input-only (tristate) mode. Each port pin also has a Schmitt-triggered input for improved input noise rejection. During Power-down all the Schmitt-triggered inputs are disabled with the exception of P3.2 ($\overline{INT0}$), P3.3 ($\overline{INT1}$), P4.2 ($\overline{RST}$), P4.0 (XTAL1) and P4.1 (XTAL2) which may be used to wake up the device. Therefore, P3.2, P3.3, P4.2, P4.0 and P4.1 should not be left floating during Power-down. In addition any pin of Port 1 configured as a General-Purpose interrupt input will also remain active during Power-down to wake-up the device. These interrupt pins should either be disabled before entering Power-down or they should not be left floating.

Table 10-2. Configuration Modes for Port x, Bit y

PxM0.y	PxM1.y	Port Mode
0	0	Quasi-bidirectional
0	1	Push-pull Output
1	0	Input Only (High Impedance)
1	1	Open-Drain Output

Table 10-3. Port Configuration Registers

Port	Port Data	Port Configuration
0	P0 (80H)	P0M0 (BAH), P0M1 (BBH)
1	P1 (90H)	P1M0 (C2H), P1M1 (C3H)
2	P2 (A0H)	P2M0 (C4H), P2M1 (C5H)
3	P3 (B0H)	P3M0 (C6H), P3M1 (C7H)
4	P4 (C0H)	P4M0 (BEH), P4M1 (BFH)

10.1.1 Quasi-bidirectional Output

Port pins in quasi-bidirectional output mode function similar to standard 8051 port pins. A Quasi-bidirectional port can be used both as an input and output without the need to reconfigure the port. This is possible because when the port outputs a logic high, it is weakly driven, allowing an external device to pull the pin low. When the pin is driven low, it is driven strongly and able to sink a large current. There are three pull-up transistors in the quasi-bidirectional output that serve different purposes.

One of these pull-ups, called the “very weak” pull-up, is turned on whenever the port latch for the pin contains a logic “1”. This very weak pull-up sources a very small current that will pull the pin high if it is left floating.

A second pull-up, called the “weak” pull-up, is turned on when the port latch for the pin contains a logic “1” and the pin itself is also at a logic “1” level. This pull-up provides the primary source current for a quasi-bidirectional pin that is outputting a “1”. If this pin is pulled low by an external device, this weak pull-up turns off, and only the very weak pull-up remains on. In order to pull the pin low under these conditions, the external device has to sink enough current to overpower the weak pull-up and pull the port pin below its input threshold voltage.

The third pull-up is referred to as the “strong” pull-up. This pull-up is used to speed up low-to-high transitions on a quasi-bidirectional port pin when the port latch changes from a logic “0” to a logic “1”. When this occurs, the strong pull-up turns on for two CPU clocks quickly pulling the port pin high. The quasi-bidirectional port configuration is shown in Figure 10-1.

Figure 10-1. Quasi-bidirectional Output

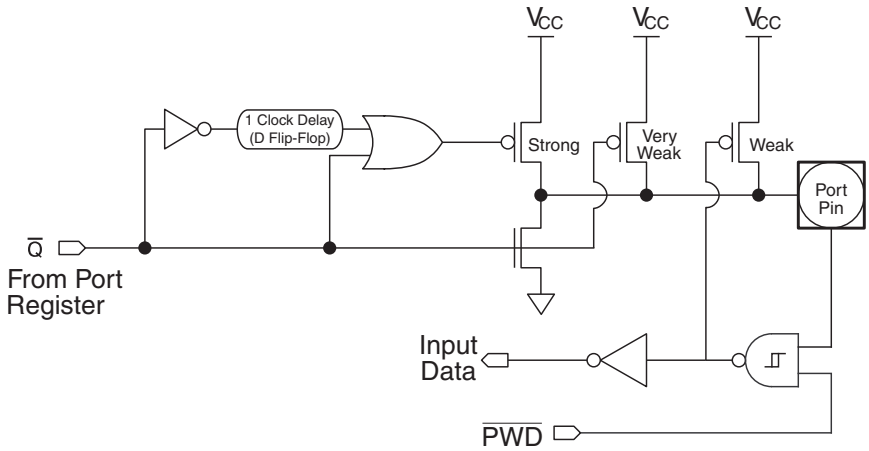

10.1.2 Input-only Mode

The input only port configuration is shown in Figure 10-2. The output drivers are tristated. The input includes a Schmitt-triggered input for improved input noise rejection. The input circuitry of P3.2, P3.3, P4.2, P4.0 and P4.1 is not disabled during Power-down (see Figure 10-3) and therefore these pins should not be left floating during Power-down when configured in this mode.

Figure 10-2. Input Only

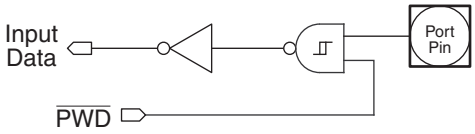

Figure 10-3. Input Circuit for P3.2, P3.3, P4.0, P4.1 and P4.2

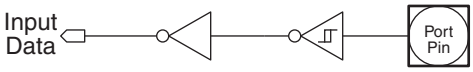

10.1.3 Open-drain Output

The open-drain output configuration turns off all pull-ups and only drives the pull-down transistor of the port pin when the port latch contains a logic “0”. To be used as a logic output, a port configured in this manner must have an external pull-up, typically a resistor tied to V_{DD}. The pull-down for this mode is the same as for the quasi-bidirectional mode. The open-drain port configuration is shown in Figure 10-4. The input circuitry of P3.2, P3.3, P4.0, P4.1 and P4.2 is not disabled during Power-down (see Figure 10-3) and therefore these pins should not be left floating during Power-down when configured in this mode.

Figure 10-4. Open-Drain Output

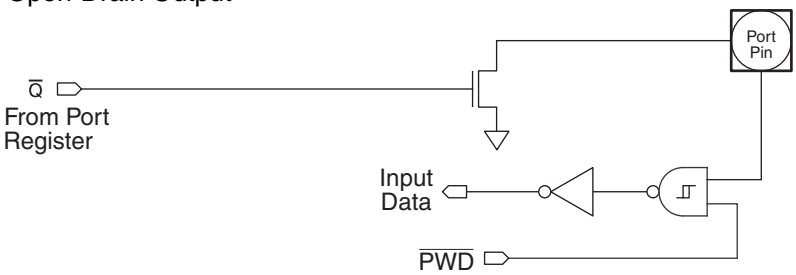

10.1.4 Push-pull Output

The push-pull output configuration has the same pull-down structure as both the open-drain and the quasi-bidirectional output modes, but provides a continuous strong pull-up when the port latch contains a logic “1”. The push-pull mode may be used when more source current is needed from a port output. The push-pull port configuration is shown in Figure 10-5.

Figure 10-5. Push-pull Output

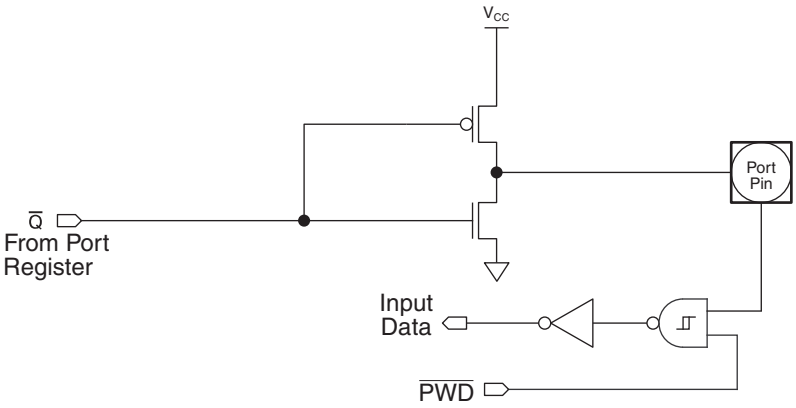

10.2 Port Analog Functions

The AT89LP3240/6440 incorporates two analog comparators and an 8-channel analog-to-digital converter. In order to give the best analog performance and minimize power consumption, pins that are being used for analog functions must have both their digital outputs and digital inputs disabled. Digital outputs are disabled by putting the port pins into the input-only mode as described in "Port Configuration" on page 45. The analog input pins will always default to input-only mode after reset regardless of the state of the Tristate-Port Fuse.

Digital inputs on P2.4, P2.5, P2.6 and P2.7 are disabled whenever an analog comparator is enabled by setting the CENA or CENB bits in ACSRA and ACSRB and that pin is configured for input-only mode. To use an analog input pin as a high-impedance digital input while a comparator is enabled, that pin should be configured in open-drain mode and the corresponding port register bit should be set to 1.

Digital inputs on Port 0 are disabled for each pin configured for input-only mode whenever the ADC is enabled by setting the ADCE bit and clearing the DAC bit in DADC. To use any Port 0 input pin as a high-impedance digital input while the ADC is enabled, that pin should be configured in open-drain mode and the corresponding port register bit should be set to 1. When DAC mode is enabled, P2.2 and P2.3 are forced to input-only mode.

10.3 Port Read-Modify-Write

A read from a port will read either the state of the pins or the state of the port register depending on which instruction is used. Simple read instructions will always access the port pins directly. Read-modify-write instructions, which read a value, possibly modify it, and then write it back, will always access the port register. This includes bit write instructions such as CLR or SETB as they actually read the entire port, modify a single bit, then write the data back to the entire port. See Table 10-4 for a complete list of Read-Modify-Write instruction which may access the ports.

Table 10-4. Port Read-Modify-Write Instructions

Mnemonic	Instruction	Example
ANL	Logical AND	ANL P1, A
ORL	Logical OR	ORL P1, A
XRL	Logical EX-OR	XRL P1, A
JBC	Jump if bit set and clear bit	JBC P3.0, LABEL
CPL	Complement bit	CPL P3.1
INC	Increment	INC P1
DEC	Decrement	DEC P3
DJNZ	Decrement and jump if not zero	DJNZ P3, LABEL
MOV PX.Y, C	Move carry to bit Y of Port X	MOV P1.0, C
CLR PX.Y	Clear bit Y of Port X	CLR P1.1
SETB PX.Y	Set bit Y of Port X	SETB P3.2

10.4 Port Alternate Functions

Most general-purpose digital I/O pins of the AT89LP3240/6440 share functionality with the various I/Os needed for the peripheral units. Table 10-6 lists the alternate functions of the port pins. Alternate functions are connected to the pins in a logic AND fashion. In order to enable the alternate function on a port pin, that pin must have a “1” in its corresponding port register bit, otherwise the input/output will always be “0”. However, alternate functions may be temporarily forced to “0” by clearing the associated port bit, provided that the pin is not in input-only mode. Furthermore, each pin must be configured for the correct input/output mode as required by its peripheral before it may be used as such. Table 10-5 shows how to configure a generic pin for use with an alternate function.

Table 10-5. Alternate Function Configurations for Pin y of Port x

PxM0.y	PxM1.y	Px.y	I/O Mode
0	0	1	bidirectional (internal pull-up)
0	1	1	output
1	0	X	input
1	1	1	bidirectional (external pull-up)

Table 10-6. Port Pin Alternate Functions

Port Pin	Configuration Bits		Alternate Function	Notes
	PxM0.y	PxM1.y		
P0.0	P0M0.0	P0M1.0	AD0	Automatic configuration
			ADC0	input-only
P0.1	P0M0.1	P0M1.1	AD1	Automatic configuration
			ADC1	input-only
P0.2	P0M0.2	P0M1.2	AD2	Automatic configuration
			ADC2	input-only
P0.3	P0M0.3	P0M1.3	AD3	Automatic configuration
			ADC3	input-only
P0.4	P0M0.4	P0M1.4	AD4	Automatic configuration
			ADC4	input-only
P0.5	P0M0.5	P0M1.5	AD5	Automatic configuration
			ADC5	input-only
P0.6	P0M0.6	P0M1.6	AD6	Automatic configuration
			ADC6	input-only
P0.7	P0M0.7	P0M1.7	AD7	Automatic configuration
			ADC7	input-only
P1.0	P1M0.0	P1M1.0	T2	
			GPI0	
P1.1	P1M0.1	P1M1.1	T2EX	
			GPI1	

Table 10-6. Port Pin Alternate Functions

Port Pin	Configuration Bits		Alternate Function	Notes
	PxM0.y	PxM1.y		
P1.2	P1M0.2	P1M1.2	SDA	open-drain
			GPI2	
P1.3	P1M0.3	P1M1.3	SCL	open-drain
			GPI3	
P1.4	P1M0.4	P1M1.4	$\overline{SS}$	
			GPI4	
P1.5	P1M0.5	P1M1.5	MOSI	
			GPI5	
P1.6	P1M0.6	P1M1.6	MISO	
			GPI6	
P1.7	P1M0.7	P1M1.7	SCK	
			GPI7	
P2.0	P2M0.0	P2M1.0	CCA	
P2.1	P2M0.1	P2M1.1	CCB	
P2.2	P2M0.2	P2M1.2	CCC	
			DA+	input-only
P2.3	P2M0.3	P2M1.3	CCD	
			DA-	input-only
P2.4	P2M0.4	P2M1.4	AIN0	input-only
P2.5	P2M0.5	P2M1.5	AIN1	input-only
P2.6	P2M0.6	P2M1.6	AIN2	input-only
P2.7	P2M0.7	P2M1.7	AIN3	input-only
P3.0	P3M0.0	P3M1.0	RXD	
P3.1	P3M0.1	P3M1.1	TXD	
P3.2	P3M0.2	P3M1.2	$\overline{INT0}$	
P3.3	P3M0.3	P3M1.3	$\overline{INT1}$	
P3.4	P3M0.4	P3M1.4	T0	
P3.5	P3M0.5	P3M1.5	T1	
P3.6	P3M0.6	P3M1.6	$\overline{WR}$	
P3.7	P3M0.7	P3M1.7	$\overline{RD}$	
P4.2	P3M0.5	P3M1.5	$\overline{RST}$	$\overline{RST}$ must be disabled to use P4.2
P4.6	not configurable		CMPA	Pin is tied to comparator output
P4.7	not configurable		CMPB	Pin is tied to comparator output

11. Enhanced Timer 0 and Timer 1 with PWM

The AT89LP3240/6440 has two 16-bit Timer/Counters, Timer 0 and Timer 1, with the following features:

- Two 16-bit timer/counters with 16-bit reload registers
- Two independent 8-bit precision PWM outputs with 8-bit prescalers
- UART or SPI baud rate generation using Timer 1
- Output pin toggle on timer overflow
- Split timer mode allows for three separate timers (2 8-bit, 1 16-bit)
- Gated modes allow timers to run/halt based on an external input

Timer 0 and Timer 1 have similar modes of operation. As timers, the timer registers increase every clock cycle by default. Thus, the registers count clock cycles. Since a clock cycle consists of one oscillator period, the count rate is equal to the oscillator frequency. The timer rate can be prescaled by a value between 1 and 16 using the Timer Prescaler (see Table 6-2 on page 33). Both Timers share the same prescaler.

As counters, the timer registers are incremented in response to a 1-to-0 transition at the corresponding input pins, T0 or T1. The external input is sampled every clock cycle. When the samples show a high in one cycle and a low in the next cycle, the count is incremented. The new count value appears in the register during the cycle following the one in which the transition was detected. Since 2 clock cycles are required to recognize a 1-to-0 transition, the maximum count rate is 1/2 of the oscillator frequency. There are no restrictions on the duty cycle of the input signal, but it should be held for at least one full clock cycle to ensure that a given level is sampled at least once before it changes.

Furthermore, the Timer or Counter functions for Timer 0 and Timer 1 have four operating modes: variable width timer, 16-bit auto-reload timer, 8-bit auto-reload timer, and split timer. The control bits C/T in the Special Function Register TMOD select the Timer or Counter function. The bit pairs (M1, M0) in TMOD select the operating modes.

Table 11-1. Timer 0/1 Register Summary

Name	Address	Purpose	Bit-Addressable
TCON	88H	Control	Y
TMOD	89H	Mode	N
TL0	8AH	Timer 0 low-byte	N
TL1	8BH	Timer 1 low-byte	N
TH0	8CH	Timer 0 high-byte	N
TH1	8DH	Timer 1 high-byte	N
TCONB	91H	Mode	N
RL0	92H	Timer 0 reload low-byte	N
RL1	93H	Timer 1 reload low-byte	N
RH0	94H	Timer 0 reload high-byte	N
RH1	95H	Timer 1 reload high-byte	N

11.1 Mode 0 – Variable Width Timer/Counter

Both Timers in Mode 0 are 8-bit Counters with a variable prescaler. The prescaler may vary from 1 to 8 bits depending on the PSC bits in TCONB, giving the timer a range of 9 to 16 bits. By default the timer is configured as a 13-bit timer compatible to Mode 0 in the standard 8051. Figure 11-1 shows the Mode 0 operation as it applies to Timer 1 in 13-bit mode. As the count rolls over from all "1"s to all "0"s, it sets the Timer interrupt flag TF1. The counter input is enabled to the Timer when TR1 = 1 and either GATE1 = 0 or $\overline{INT1}$ = 1. Setting GATE1 = 1 allows the Timer to be controlled by external input $\overline{INT1}$, to facilitate pulse width measurements. TR1 is a control bit in the Special Function Register TCON. GATE1 is in TMOD. The 13-bit register consists of all 8 bits of TH1 and the lower 5 bits of TL1. The upper 3 bits of TL1 are indeterminate and should be ignored. Setting the run flag (TR1) does not clear the registers.

$$\text{Mode 0:} \qquad \text{Time-out Period} = \frac{256 \times 2^{PSC0+1}}{\text{Oscillator Frequency}} \times (TPS + 1)$$

Note: RH1/RL1 are not required by Timer 1 during Mode 0 and may be used as temporary storage registers.

Figure 11-1. Timer/Counter 1 Mode 0: Variable Width Counter

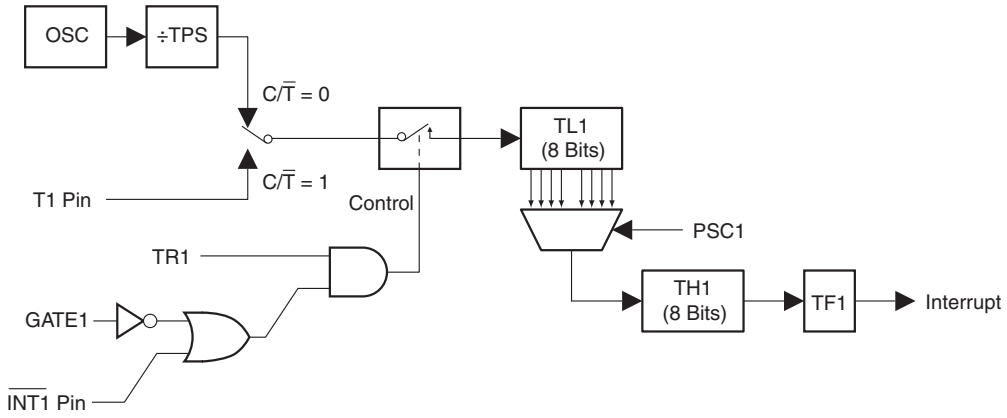

Mode 0 operation is the same for Timer 0 as for Timer 1, except that TR0, TF0, GATE0 and $\overline{INT0}$ replace the corresponding Timer 1 signals in Figure 11-1. There are two different C/T bits, one for Timer 1 (TMOD.6) and one for Timer 0 (TMOD.2).

11.2 Mode 1 – 16-bit Auto-Reload Timer/Counter

In Mode 1 the Timers are configured for 16-bit auto-reload. The Timer register is run with all 16 bits. The 16-bit reload value is stored in the high and low reload registers (RH1/RL1). The clock is applied to the combined high and low timer registers (TH1/TL1). As clock pulses are received, the timer counts up: 0000H, 0001H, 0002H, etc. An overflow occurs on the FFFFH-to-0000H transition, upon which the timer register is reloaded with the value from RH1/RL1 and the overflow flag bit in TCON is set. See Figure 11-2. The reload registers default to 0000H, which gives the full 16-bit timer period compatible with the standard 8051. Mode 1 operation is the same for Timer/Counter 0.

$$\text{Mode 1:} \qquad \text{Time-out Period} = \frac{(65536 - \{RH0, RL0\})}{\text{Oscillator Frequency}} \times (TPS + 1)$$

Figure 11-2. Timer/Counter 1 Mode 1: 16-bit Auto-Reload

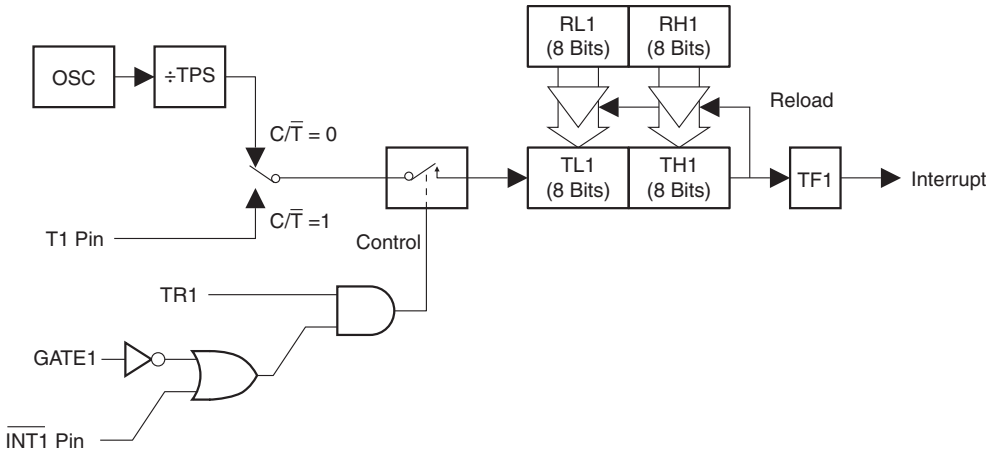

11.3 Mode 2 – 8-bit Auto-Reload Timer/Counter

Mode 2 configures the Timer register as an 8-bit Counter (TL1) with automatic reload, as shown in Figure 11-3. Overflow from TL1 not only sets TF1, but also reloads TL1 with the contents of TH1, which is preset by software. The reload leaves TH1 unchanged. Mode 2 operation is the same for Timer/Counter 0.

$$\text{Mode 2:} \qquad \text{Time-out Period} = \frac{(256 - \text{TH0})}{\text{Oscillator Frequency}} \times (\text{TPS} + 1)$$

Figure 11-3. Timer/Counter 1 Mode 2: 8-bit Auto-Reload

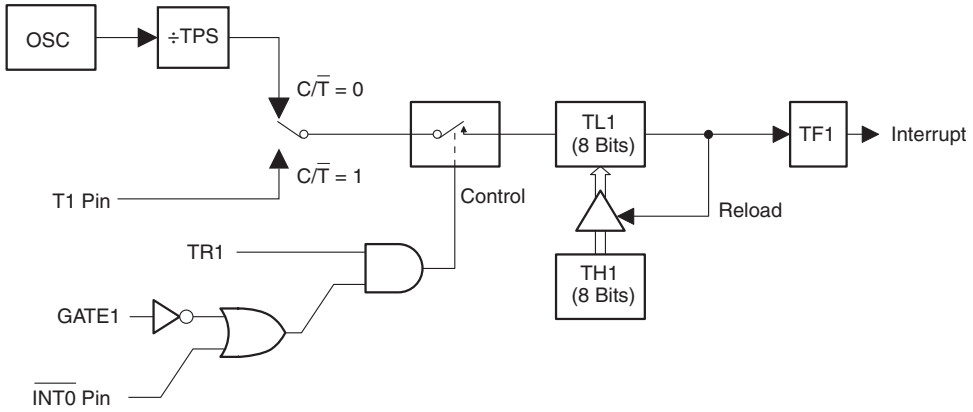

Note: RH1/RL1 are not required by Timer 1 during Mode 2 and may be used as temporary storage registers.

11.4 Mode 3 – 8-bit Split Timer

Timer 1 in Mode 3 simply holds its count. The effect is the same as setting TR1 = 0. Timer 0 in Mode 3 establishes TL0 and TH0 as two separate counters. The logic for Mode 3 on Timer 0 is shown in Figure 11-4. TL0 uses the Timer 0 control bits: C/T, GATE0, TR0, $\overline{\text{INT0}}$, and TF0. TH0 is locked into a timer function (counting clock cycles) and takes over the use of TR1 and TF1 from Timer 1. Thus, TH0 now controls the Timer 1 interrupt. While Timer 0 is in Mode 3, Timer 1 will still obey its settings in TMOD but cannot generate an interrupt.

Mode 3 is for applications requiring an extra 8-bit timer or counter. With Timer 0 in Mode 3, the AT89LP3240/6440 can appear to have four Timer/Counters. When Timer 0 is in Mode 3, Timer 1 can be turned on and off by switching it out of and into its own Mode 3. In this case, Timer 1 can still be used by the serial port as a baud rate generator or in any application not requiring an interrupt.

Figure 11-4. Timer/Counter 0 Mode 3: Two 8-bit Counters

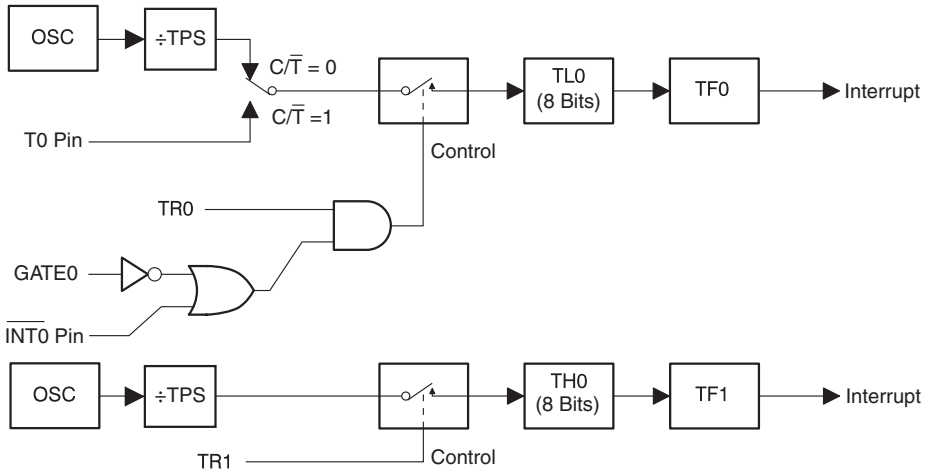

Note: RH0/RL0 are not required by Timer 0 during Mode 3 and may be used as temporary storage registers.

Table 11-2. TCON – Timer/Counter Control Register

TCON = 88H — Reset Value = 0000 0000B

Bit Addressable

	TF1	TR1	TF0	TR0	IE1	IT1	IE0	IT0
Bit	7	6	5	4	3	2	1	0

Symbol	Function
TF1	Timer 1 overflow flag. Set by hardware on Timer/Counter overflow. Cleared by hardware when the processor vectors to interrupt routine.
TR1	Timer 1 run control bit. Set/cleared by software to turn Timer/Counter on/off.
TF0	Timer 0 overflow flag. Set by hardware on Timer/Counter overflow. Cleared by hardware when the processor vectors to interrupt routine.
TR0	Timer 0 run control bit. Set/cleared by software to turn Timer/Counter on/off.
IE1	Interrupt 1 edge flag. Set by hardware when external interrupt edge detected. Cleared when interrupt processed.
IT1	Interrupt 1 type control bit. Set/cleared by software to specify falling edge/low level triggered external interrupts.
IE0	Interrupt 0 edge flag. Set by hardware when external interrupt edge detected. Cleared when interrupt processed.
IT0	Interrupt 0 type control bit. Set/cleared by software to specify falling edge/low level triggered external interrupts.

Table 11-3. TMOD – Timer/Counter Mode Control Register

TMOD Address = 089H — Reset Value = 0000 0000B

Not Bit Addressable

	GATE1	C/$\overline{T1}$	T1M1	T1M0	GATE0	C/$\overline{T0}$	T0M0	T0M1
Bit	7	6	5	4	3	2	1	0

Symbol	Function
GATE1	Timer 1 Gating Control. When set, Timer/Counter 1 is enabled only while $\overline{INT1}$ pin is high and TR1 control pin is set. When cleared, Timer 1 is enabled whenever TR1 control bit is set.
C/$\overline{T1}$	Timer or Counter Selector 1. Cleared for Timer operation (input from internal system clock). Set for Counter operation (input from T1 input pin). C/$\overline{T1}$ must be zero when using Timer 1 in PWM mode.
T1M1 T1M0	Timer 1 Operating Mode **Mode** / **T1M1** / **T1M0** / **Operation** 0 / 0 / 0 / Variable 9–16-bit Timer Mode. 8-bit Timer/Counter TH1 with TL1 as 1–8-bit prescaler. 1 / 0 / 1 / 16-bit Auto-Reload Mode. TH1 and TL1 are cascaded to form a 16-bit Timer/Counter that is reloaded with RH1 and RL1 each time it overflows. 2 / 1 / 0 / 8-bit Auto Reload Mode. TH1 holds a value which is reloaded into 8-bit Timer/Counter TL1 each time it overflows. 3 / 1 / 1 / Timer/Counter 1 is stopped
GATE0	Timer 0 Gating Control. When set, Timer/Counter 0 is enabled only while $\overline{INT0}$ pin is high and TR0 control pin is set. When cleared, Timer 0 is enabled whenever TR0 control bit is set.
C/$\overline{T0}$	Timer or Counter Selector 0. Cleared for Timer operation (input from internal system clock). Set for Counter operation (input from T0 input pin). C/$\overline{T0}$ must be zero when using Timer 0 in PWM mode.
T0M1 T0M0	Timer 0 Operating Mode **Mode** / **T0M1** / **T0M0** / **Operation** 0 / 0 / 0 / Variable 9–16-bit Timer Mode. 8-bit Timer/Counter TH0 with TL0 as 1–8-bit prescaler. 1 / 0 / 1 / 16-bit Auto-Reload Mode. TH0 and TL0 are cascaded to form a 16-bit Timer/Counter that is reloaded with RH0 and RL0 each time it overflows. 2 / 1 / 0 / 8-bit Auto Reload Mode. TH0 holds a value which is reloaded into 8-bit Timer/Counter TL0 each time it overflows. 3 / 1 / 1 / Split Timer Mode. TL0 is an 8-bit Timer/Counter controlled by the standard Timer 0 control bits. TH0 is an 8-bit timer only controlled by Timer 1 control bits.

Table 11-4. TCONB – Timer/Counter Control Register B

TCONB = 91H — Reset Value = 0010 0100B

Not Bit Addressable

	PWM1EN	PWM0EN	PSC12	PSC11	PSC10	PSC02	PSC01	PSC00
Bit	7	6	5	4	3	2	1	0

Symbol	Function
PWM1EN	Configures Timer 1 for Pulse Width Modulation output on T1 (P3.5).
PWM0EN	Configures Timer 0 for Pulse Width Modulation output on T0 (P3.4).
PSC12 PSC11 PSC10	Prescaler for Timer 1 Mode 0. The number of active bits in TL1 equals PSC1 + 1. After reset PSC1 = 100B which enables 5 bits of TL1 for compatibility with the 13-bit Mode 0 in AT89S2051.
PSC02 PSC01 PSC00	Prescaler for Timer 0 Mode 0. The number of active bits in TL0 equals PSC0 + 1. After reset PSC0 = 100B which enables 5 bits of TL0 for compatibility with the 13-bit Mode 0 in AT89C52.

11.5 Pulse Width Modulation

On the AT89LP3240/6440, Timer 0 and Timer 1 may be independently configured as 8-bit asymmetrical (edge-aligned) pulse width modulators (PWM) by setting the PWM0EN or PWM1EN bits in TCONB, respectively. In PWM Mode the generated waveform is output on the timer's input pin, T0 or T1. Therefore, C/$\overline{T}$x must be set to “0” when in PWM mode and the T0 (P3.4) and T1 (P3.5) must be configured in an output mode. The Timer Overflow Flags and Interrupts will continue to function while in PWM Mode and Timer 1 may still generate the baud rate for the UART. The timer GATE function also works in PWM mode, allowing the output to be halted by an external input. Each PWM channel has four modes selected by the mode bits in TMOD.

An example waveform for Timer 0 in PWM Mode 0 is shown in Figure 11-5. TH0 acts as an 8-bit counter while RH0 stores the 8-bit compare value. When TH0 is 00H the PWM output is set high. When the TH0 count reaches the value stored in RH0 the PWM output is set low. Therefore, the pulse width is proportional to the value in RH0. To prevent glitches, writes to RH0 only take effect on the FFH to 00H overflow of TH0. Setting RH0 to 00H will keep the PWM output low.

Figure 11-5. 8-bit Asymmetrical Pulse Width Modulation

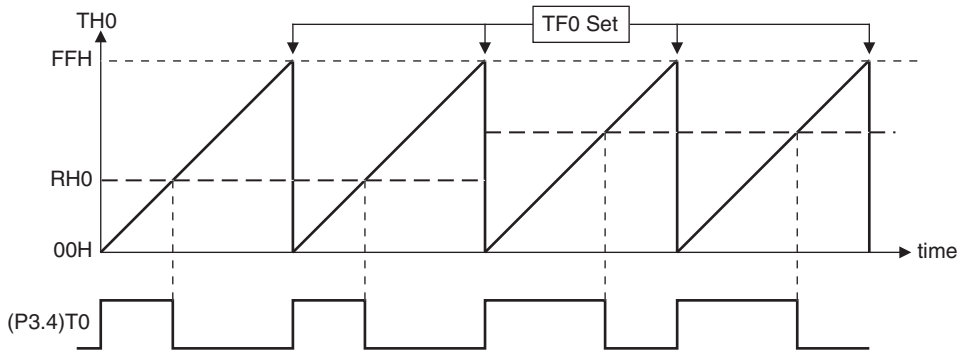

11.5.1 Mode 0 – 8-bit PWM with 8-bit Logarithmic Prescaler

In Mode 0, TLx acts as a logarithmic prescaler driving 8-bit counter THx (see Figure 11-6). The PSCx bits in TCONB control the prescaler value. On THx overflow, the duty cycle value in RHx is transferred to OCRx and the output pin is set high. When the count in THx matches OCRx, the output pin is cleared low. The following formulas give the output frequency and duty cycle for Timer 0 in PWM Mode 0. Timer 1 in PWM Mode 0 is identical to Timer 0.

Mode 0:

$$f_{out} = \frac{\text{Oscillator Frequency}}{256 \times 2^{\text{PSC0}+1}} \times \frac{1}{\text{TPS}+1}$$

$$\text{Duty Cycle \%} = 100 \times \frac{\text{RH0}}{256}$$

Figure 11-6. Timer/Counter 1 PWM Mode 0

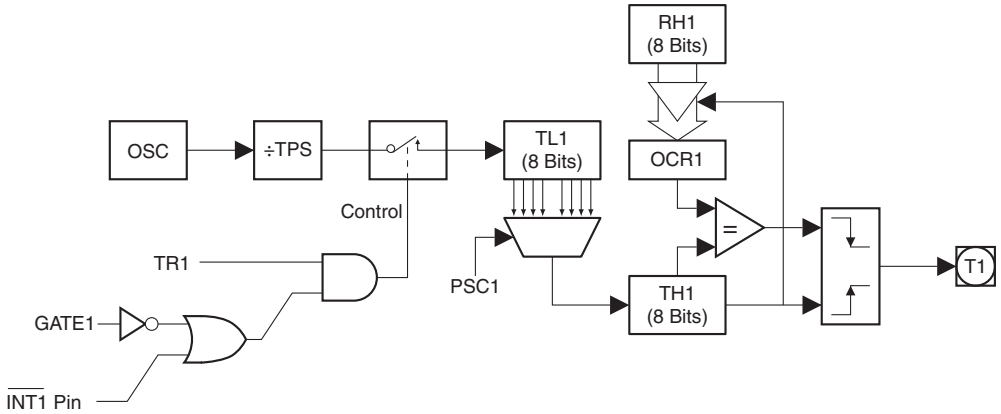

11.5.2 Mode 1 – 8-bit PWM with 8-bit Linear Prescaler

In Mode 1, TLx provides linear prescaling with an 8-bit auto-reload from RLx (see Figure 11-7 on page 58). On TLx overflow, TLx is loaded with the value of RLx. THx acts as an 8-bit counter. On THx overflow, the duty cycle value in RHx is transferred to OCRx and the output pin is set high. When the count in THx matches OCRx, the output pin is cleared low. The following formulas give the output frequency and duty cycle for Timer 0 in PWM Mode 1. Timer 1 in PWM Mode 1 is identical to Timer 0.

Mode 1:

$$f_{out} = \frac{\text{Oscillator Frequency}}{256 \times (256 - \text{RL0})} \times \frac{1}{\text{TPS}+1}$$

$$\text{Duty Cycle \%} = 100 \times \frac{\text{RH0}}{256}$$

11.5.3 Mode 2 – 8-bit Frequency Generator

Timer 0 in PWM Mode 2 functions as an 8-bit Auto-Reload timer, the same as normal Mode 2, with the exception that the output pin T0 is toggled at every TL0 overflow (see Figure 11-8 and Figure 11-9 on page 58). Timer 1 in PWM Mode 2 is identical to Timer 0. PWM Mode 2 can be used to output a square wave of varying frequency. THx acts as an 8-bit counter. The following formula gives the output frequency for Timer 0 in PWM Mode 2.

Mode 2:

$$f_{out} = \frac{\text{Oscillator Frequency}}{2 \times (256 - \text{TH0})} \times \frac{1}{\text{TPS}+1}$$

Figure 11-7. Timer/Counter 1 PWM Mode 1

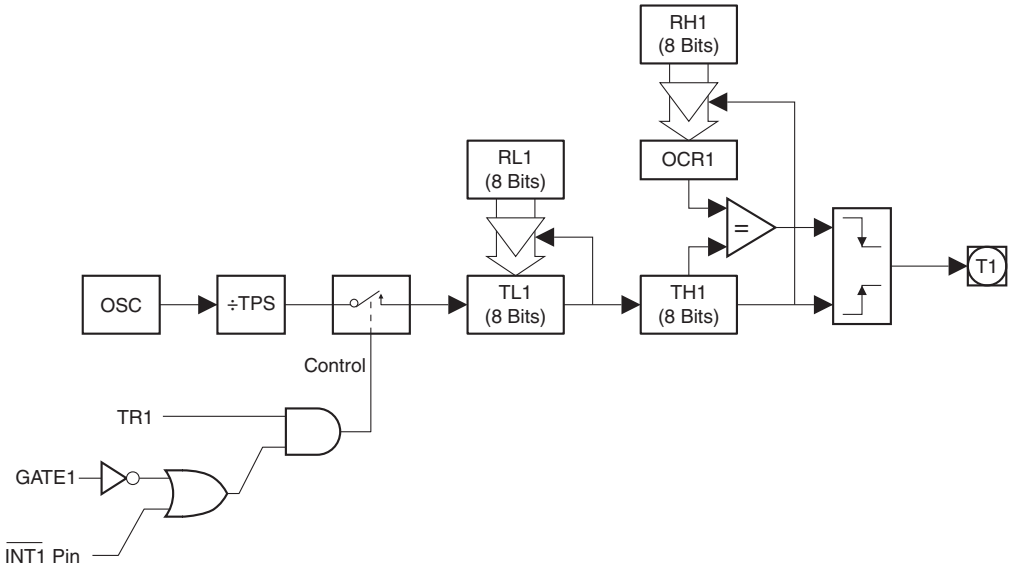

Figure 11-8. Timer/Counter 1 PWM Mode 2

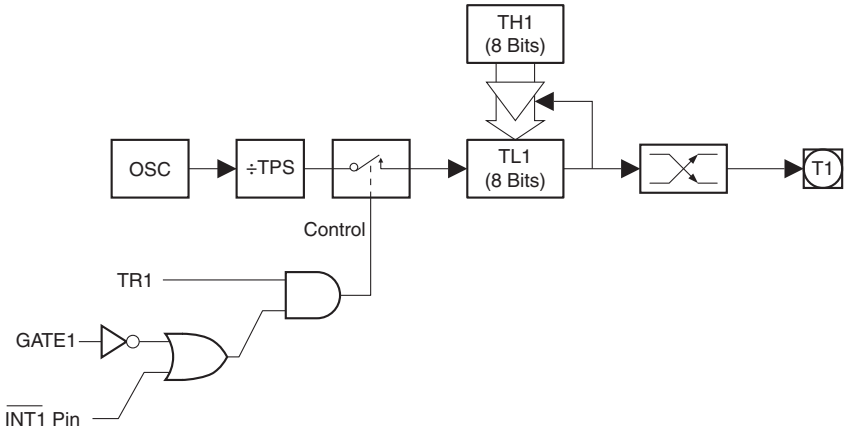

Note: {RH0 & RL0}/{RH1 & RL1} are not required by Timer 0/Timer 1 during PWM Mode 2 and may be used as temporary storage registers.

Figure 11-9. PWM Mode 2 Waveform

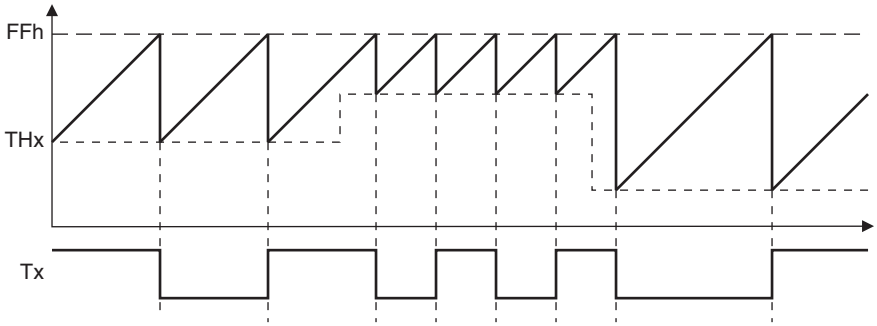

11.5.4 Mode 3 – Split 8-bit PWM

Timer 1 in PWM Mode 3 simply holds its count. The effect is the same as setting TR1 = 0. Timer 0 in PWM Mode 3 establishes TL0 and TH0 as two separate PWM counters in a manner similar to normal Mode 3. PWM Mode 3 on Timer 0 is shown in Figure 11-10. Only the Timer Prescaler is available to change the output frequency during PWM Mode 3. TL0 can use the Timer 0 control bits: GATE, TR0, $\overline{\text{INT0}}$, PWM0EN and TF0. TH0 is locked into a timer function and uses TR1, PWM1EN and TF1. RL0 provides the duty cycle for TL0 and RH0 provides the duty cycle for TH0.

PWM Mode 3 is for applications requiring a single PWM channel and two timers, or two PWM channels and an extra timer or counter. With Timer 0 in PWM Mode 3, the AT89LP3240/6440 can appear to have four Timer/Counters. When Timer 0 is in PWM Mode 3, Timer 1 can be turned on and off by switching it out of and into its own Mode 3. In this case, Timer 1 can still be used by the serial port as a baud rate generator or in any application not requiring an interrupt. The following formulas give the output frequency and duty cycle for Timer 0 in PWM Mode 3.

Mode 3: $$f_{out} = \frac{\text{Oscillator Frequency}}{256} \times \frac{1}{\text{TPS} + 1}$$

Mode 3, T0: $$\text{Duty Cycle \%} = 100 \times \frac{\text{RL0}}{256}$$

Mode 3, T1: $$\text{Duty Cycle \%} = 100 \times \frac{\text{RH0}}{256}$$

Figure 11-10. Timer/Counter 0 PWM Mode 3

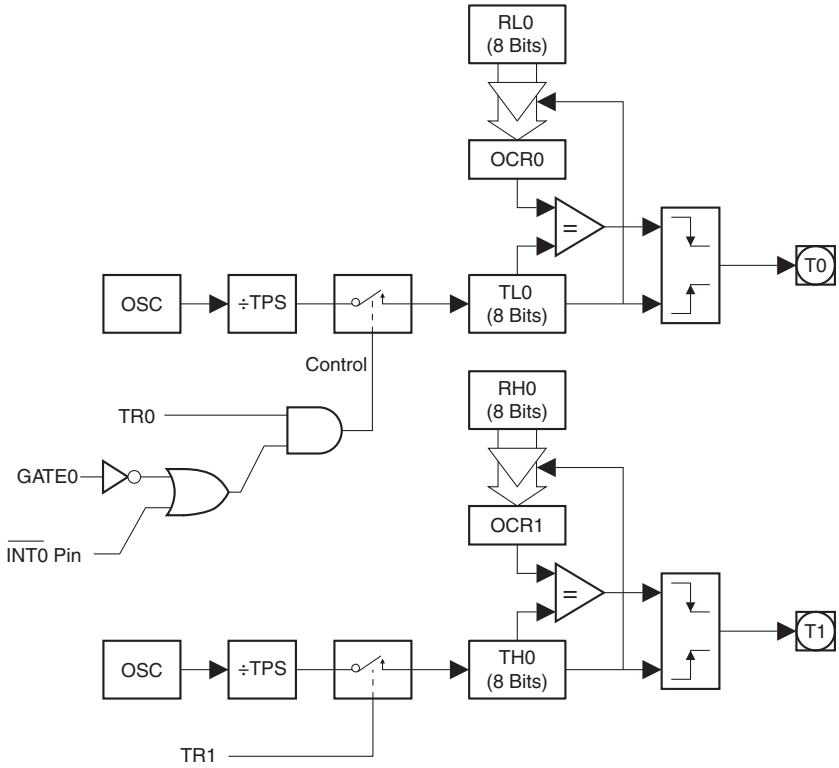

12. Enhanced Timer 2

The AT89LP3240/6440 includes a 16-bit Timer/Counter 2 with the following features:

- 16-bit timer/counter with one 16-bit reload/capture register
- One external reload/capture input
- Up/Down counting mode with external direction control
- UART baud rate generation
- Output-pin toggle on timer overflow
- Dual slope symmetric operating modes

Timer 2 is a 16-bit Timer/Counter that can operate as either a timer or an event counter. The type of operation is selected by bit C/$\overline{T2}$ in the SFR T2CON. Timer 2 has three operating modes: capture, auto-reload (up or down counting), and baud rate generator. The modes are selected by bits in T2CON and T2MOD, as shown in Table 12-3. Timer 2 also serves as the time base for the Compare/Capture Array (See Section 13. “Compare/Capture Array” on page 69).

Timer 2 consists of two 8-bit registers, TH2 and TL2. In the Timer function, the register is incremented every clock cycle. Since a clock cycle consists of one oscillator period, the count rate is equal to the oscillator frequency. The timer rate can be prescaled by a value between 1 and 16 using the Timer Prescaler (see Table 6-2 on page 33).

In the Counter function, the register is incremented in response to a 1-to-0 transition at its corresponding external input pin, T2. In this function, the external input is sampled every clock cycle. When the samples show a high in one cycle and a low in the next cycle, the count is incremented. The new count value appears in the register during the cycle following the one in which the transition was detected. Since two clock cycles are required to recognize a 1-to-0 transition, the maximum count rate is 1/2 of the oscillator frequency. To ensure that a given level is sampled at least once before it changes, the level should be held for at least one full clock cycle.

Table 12-1. Timer 2 Operating Modes

RCLK + TCLK	CP/$\overline{RL2}$	DCEN	T2OE	TR2	MODE
0	0	0	0	1	16-bit Auto-reload
0	0	1	0	1	16-bit Auto-reload Up-Down
0	1	X	0	1	16-bit Capture
1	X	X	X	1	Baud Rate Generator
X	X	X	1	1	Frequency Generator
X	X	X	X	0	(Off)

The following definitions for Timer 2 are used in the subsequent paragraphs:

Table 12-2. Timer 2 Definitions

Symbol	Definition
MIN	0000H
MAX	FFFFH
BOTTOM	16-bit value of {RCAP2H,RCAP2L} (standard modes)
TOP	16-bit value of {RCAP2H,RCAP2L} (enhanced modes)

12.1 Timer 2 Registers

Control and status bits for Timer 2 are contained in registers T2CON (see Table 12-3) and T2MOD (see Table 12-4). The register pair {TH2, TL2} at addresses 0CDH and 0CCH are the 16-bit timer register for Timer 2. The register pair {RCAP2H, RCAP2L} at addresses 0CBH and 0CAH are the 16-bit Capture/Reload register for Timer 2 in capture and auto-reload modes.

Table 12-3. T2CON – Timer/Counter 2 Control Register

T2CON Address = 0C8H — Reset Value = 0000 0000B

Bit Addressable

	TF2	EXF2	RCLK	TCLK	EXEN2	TR2	C/$\overline{T2}$	CP/$\overline{RL2}$
Bit	7	6	5	4	3	2	1	0

Symbol	Function
TF2	Timer 2 overflow flag set by a Timer 2 overflow and must be cleared by software. TF2 will not be set when either RCLK = 1 or TCLK = 1.
EXF2	Timer 2 external flag set when either a capture or reload is caused by a negative transition on T2EX and EXEN2 = 1. When Timer 2 interrupt is enabled, EXF2 = 1 will cause the CPU to vector to the Timer 2 interrupt routine. EXF2 must be cleared by software. EXF2 does not cause an interrupt in up/down counter mode (DCEN = 1) or dual-slope mode.
RCLK	Receive clock enable. When set, causes the serial port to use Timer 2 overflow pulses for its receive clock in serial port Modes 1 and 3. RCLK = 0 causes Timer 1 overflows to be used for the receive clock.
TCLK	Transmit clock enable. When set, causes the serial port to use Timer 2 overflow pulses for its transmit clock in serial port Modes 1 and 3. TCLK = 0 causes Timer 1 overflows to be used for the transmit clock.
EXEN2	Timer 2 external enable. When set, allows a capture or reload to occur as a result of a negative transition on T2EX if Timer 2 is not being used to clock the serial port. EXEN2 = 0 causes Timer 2 to ignore events at T2EX.
TR2	Start/Stop control for Timer 2. TR2 = 1 starts the timer.
C/$\overline{T2}$	Timer or counter select for Timer 2. C/$\overline{T2}$ = 0 for timer function. C/$\overline{T2}$ = 1 for external event counter (falling edge triggered).
CP/$\overline{RL2}$	Capture/Reload select. CP/$\overline{RL2}$ = 1 causes captures to occur on negative transitions at T2EX if EXEN2 = 1. CP/$\overline{RL2}$ = 0 causes automatic reloads to occur when Timer 2 overflows or negative transitions occur at T2EX when EXEN2 = 1. When either RCLK or TCLK = 1, this bit is ignored and the timer is forced to auto-reload on Timer 2 overflow.

Table 12-4. T2MOD – Timer 2 Mode Control Register

T2MOD Address = 0C9H — Reset Value = 0000 0000B

Not Bit Addressable

	PHSD	PHS2	PHS1	PHS0	T2CM1	T2CM0	T2OE	DCEN
Bit	7	6	5	4	3	2	1	0

Symbol	Function
PHSD	CCA Phase Direction. For phase modes with 3 or 4 channels, PHSD determines the direction that the channels are cycled through. PHSD also determines the initial phase relationship for 2 phase modes. **PHSD** — **Direction** 0 — A →B →A →B or A →B →C →A →B →C or A →B →C →D →A →B →C →D 1 — B →A →B →A or C →B →A →C →B →A or D →C →B →A →D →C →B →A

Symbol	Function
PHS [2-0]	CCA Phase Mode. PWM channels may be grouped by 2, 3 or 4 such that only one channel in a group produces a pulse in any one period. The PHS[2-0] bits may only be written when the timer is not active, i.e. TR2 = 0. **PHS2 PHS1 PHS0 Phase Mode** 0 0 0 Disabled, all channels active 0 0 1 2-phase output on channels A & B 0 1 0 3-phase output on channels A, B & C 0 1 1 4-phase output on channels A, B, C & D 1 0 0 Dual 2-phase output on channels A & B and C & D 1 0 1 reserved 1 1 0 reserved 1 1 1 reserved
T2CM [1-0]	Timer 2 Count Mode. **T2CM1 T2CM0 Count Mode** 0 0 Standard Timer 2 (up count: BOTTOM →MAX) 0 1 Clear on RCAP compare (up count: MIN →TOP) 1 0 Dual-slope with single update (up-down count: MIN →TOP →MIN) 1 1 Dual-slope with double update (up-down count: MIN →TOP →MIN)
T2OE	Timer 2 Output Enable. When T2OE = 1 and C/$\overline{T}$2 = 0, the T2 pin will toggle after every Timer 2 overflow.
DCEN	Timer 2 Down Count Enable. When Timer 2 operates in Auto-Reload mode and EXEN2 = 1, setting DCEN = 1 will cause Timer 2 to count up or down depending on the state of T2EX.

12.2 Capture Mode

In the Capture mode, Timer 2 is a fixed 16-bit timer or counter that counts up from MIN to MAX. An overflow from MAX to MIN sets bit TF2 in T2CON. If EXEN2 = 1, a 1-to-0 transition at external input T2EX also causes the current value in TH2 and TL2 to be captured into RCAP2H and RCAP2L, respectively. In addition, the transition at T2EX causes bit EXF2 in T2CON to be set. The EXF2 and TF2 bits can generate an interrupt. Capture mode is illustrated in Figure 12-1. The Timer 2 overflow rate in Capture mode is given by the following equation:

$$\text{Capture Mode:} \qquad \text{Time-out Period} = \frac{65536}{\text{Oscillator Frequency}} \times (\text{TPS} + 1)$$

Figure 12-1. Timer 2 Diagram: Capture Mode

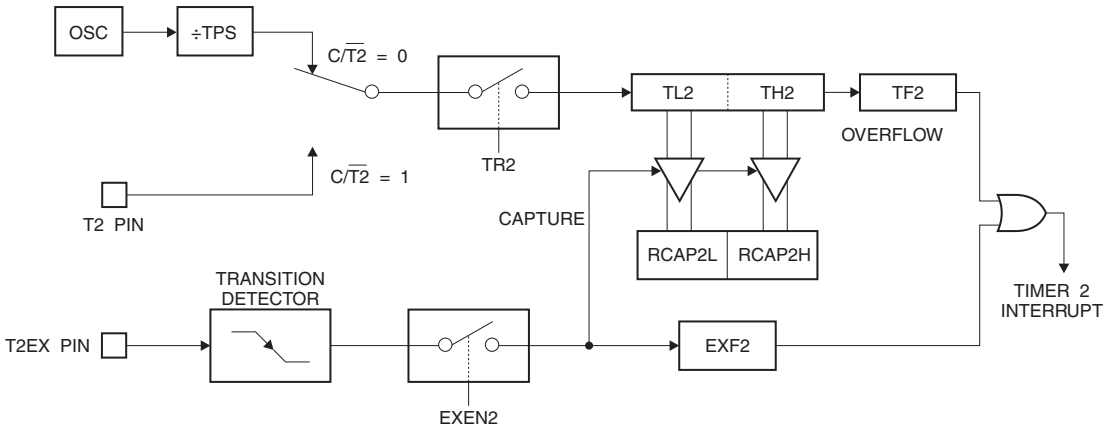

12.3 Auto-Reload Mode

Timer 2 can be programmed to count up or down when configured in its 16-bit auto-reload mode. This feature is invoked by the DCEN (Down Counter Enable) bit located in the SFR T2MOD (see Table 12-4). Upon reset, the DCEN bit is set to 0 so that timer 2 will default to count up. When DCEN is set, Timer 2 can count up or down, depending on the value of the T2EX pin. The overflow and reload values depend on the Timer 2 Count Mode bits, $T2CM_{1-0}$ in T2MOD. A summary of the Auto-Reload behaviors is listed in Table 12-5.

Table 12-5. Summary of Auto-Reload Modes

$T2CM_{1-0}$	DCEN	T2EX	Direction	Behavior
00	0	X	Up	BOTTOM →MAX reload to BOTTOM
00	1	0	Down	MAX →BOTTOM underflow to MAX
00	1	1	Up	BOTTOM →MAX overflow to BOTTOM
01	0	X	Up	MIN →TOP reload to MIN
01	1	0	Down	TOP →MIN underflow to TOP
01	1	1	Up	MIN →TOP overflow to MIN
10	X	X	Up-Down	MIN →TOP →MIN and repeat
11	X	X	Up-Down	MIN →TOP →MIN and repeat

12.3.1 Up Counter

Figure 12-2 shows Timer 2 automatically counting up when DCEN = 0 and $T2CM_{1-0}$ = 00B. In this mode Timer 2 counts up to MAX and then sets the TF2 bit upon overflow. The overflow also causes the timer registers to be reloaded with BOTTOM, the 16-bit value in RCAP2H and RCAP2L. If EXEN2 = 1, a 16-bit reload can be triggered either by an overflow or by a 1-to-0 transition at external input T2EX. This transition also sets the EXF2 bit. Both the TF2 and EXF2 bits can generate an interrupt. The Timer 2 overflow rate for this mode is given in the following equation:

Auto-Reload Mode:
DCEN = 0, T2CM = 00B

$$\text{Time-out Period} = \frac{65536 - \{RCAP2H, RCAP2L\}}{\text{Oscillator Frequency}} \times (TPS + 1)$$

Timer 2 may also be configured to count from MIN to TOP instead of BOTTOM to MAX by setting $T2CM_{1-0}$ = 01B. In this mode Timer 2 counts up to TOP, the 16-bit value in RCAP2H and

RCAP2L and then overflows. The overflow sets TF2 and causes the timer registers to be reloaded with MIN. If EXEN2 = 1, a 1-to-0 transition on T2EX will clear the timer and set EXF2. The Timer 2 overflow rate for this mode is given in the following equation:

Auto-Reload Mode:
DCEN = 0, T2CM = 01B

$$\text{Time-out Period} = \frac{\{\text{RCAP2H}, \text{RCAP2L}\} + 1}{\text{Oscillator Frequency}} \times (\text{TPS} + 1)$$

Timer 2 Count Mode 1 is provided to support variable precision asymmetrical PWM in the CCA. The value of TOP stored in RCAP2H and RCAP2L is double-buffered such that a new TOP value takes affect only after an overflow. The behavior of Count Mode 0 versus Count Mode 1 is shown in Figure 12-3.

Figure 12-2. Timer 2 Diagram: Auto-Reload Mode (DCEN = 0)

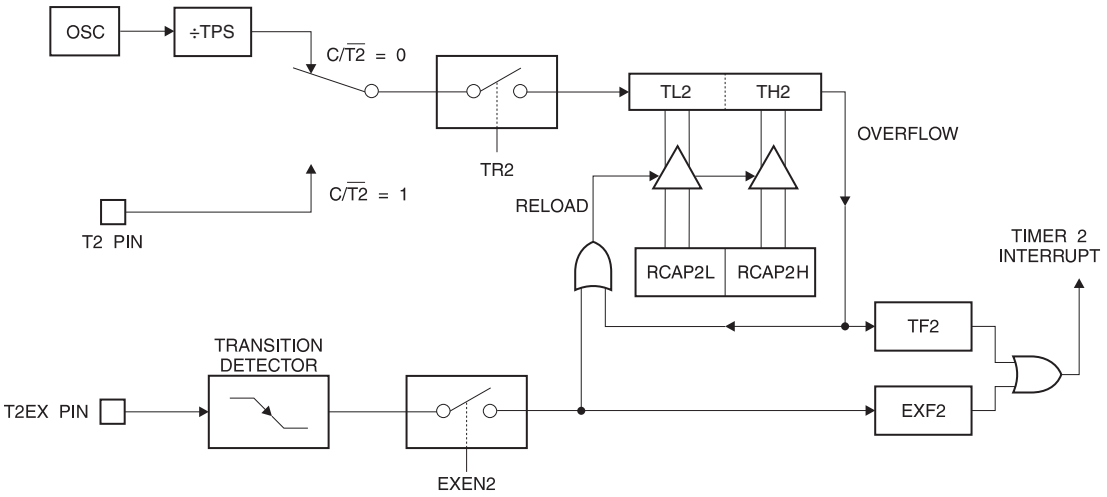

Figure 12-3. Timer 2 Waveform: Auto-Reload Mode (DCEN = 0)

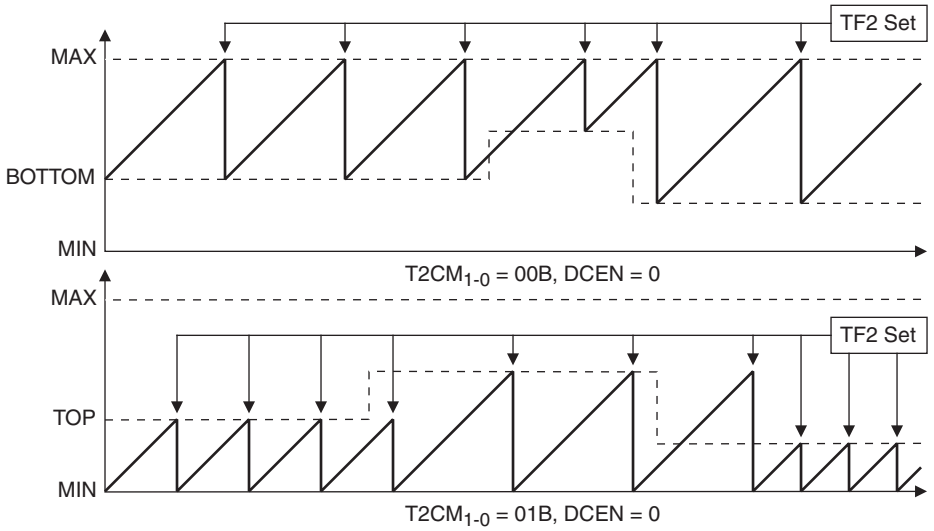

12.3.2 Up or Down Counter

Setting DCEN = 1 enables Timer 2 to count up or down, as shown in Figure 12-4. In this mode, the T2EX pin controls the direction of the count (if EXEN2 = 1). A logic 1 at T2EX makes Timer 2 count up. When $T2CM_{1-0}$ = 00B, the timer will overflow at MAX and set the TF2 bit. This overflow also causes BOTTOM, the 16-bit value in RCAP2H and RCAP2L, to be reloaded into the timer

registers, TH2 and TL2, respectively. A logic 0 at T2EX makes Timer 2 count down. The timer underflows when TH2 and TL2 equal BOTTOM, the 16-bit value stored in RCAP2H and RCAP2L. The underflow sets the TF2 bit and causes MAX to be reloaded into the timer registers. The EXF2 bit toggles whenever Timer 2 overflows or underflows and can be used as a 17th bit of resolution. In this operating mode, EXF2 does not flag an interrupt.

When T2EX = 1 and $T2CM_{1-0}$ = 01B, the timer will overflow at TOP and set the TF2 bit. This overflow also causes MIN to be reloaded into the timer registers. A logic 0 at T2EX makes Timer 2 count down. The timer underflows when TH2 and TL2 equal MIN. The underflow sets the TF2 bit and causes TOP to be reloaded into the timer registers. The behavior of Count Mode 0 versus Count Mode 0 when DCEN is enabled is shown in Figure 12-6.

Figure 12-4. Timer 2 Diagram: Auto-Reload Mode ($T2CM_{1-0}$ = 00B, DCEN = 1)

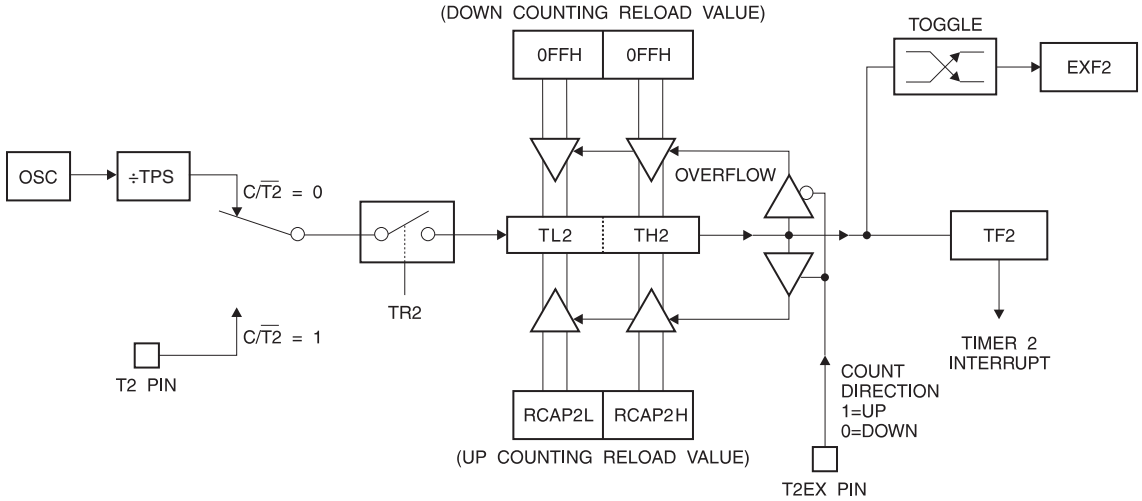

The timer overflow/underflow rate for up-down counting mode is the same as for up counting mode, provided that the count direction does not change. Changes to the count direction may result in longer or shorter periods between time-outs.

Figure 12-5. Timer 2 Diagram: Auto-Reload Mode ($T2CM_{1-0}$ = 01B, DCEN = 1)

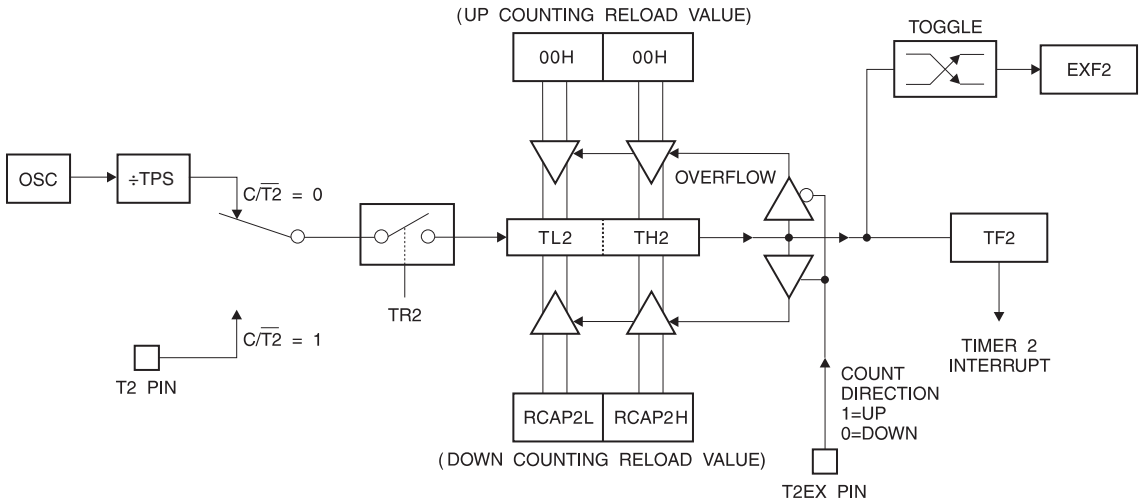

Figure 12-6. Timer 2 Waveform: Auto-Reload Mode (DCEN = 1)

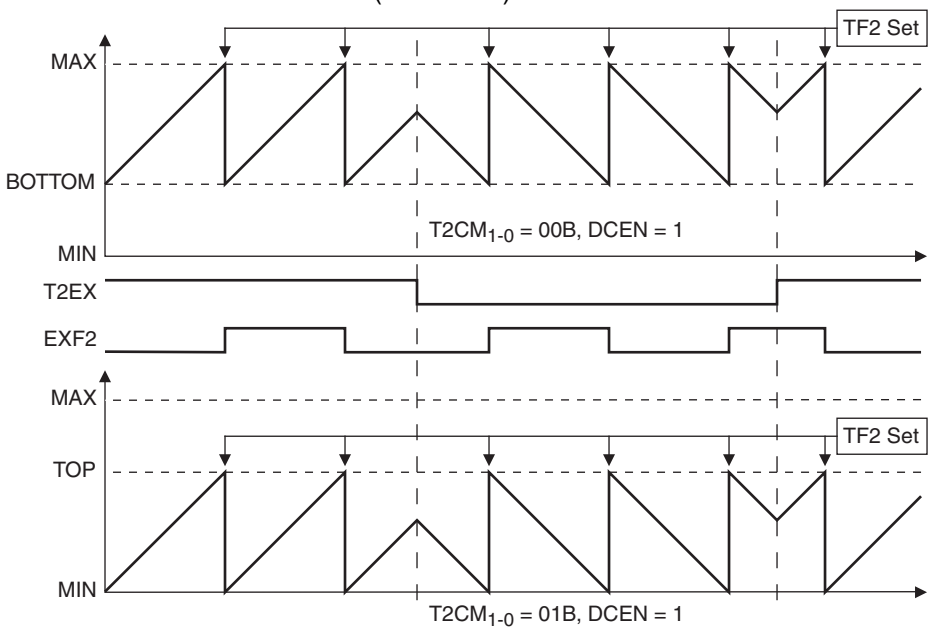

12.3.3 Dual Slope Counter

When Timer 2 Auto-Reload Mode uses Count Mode 2 ($T2CM_{1-0}$ = 10B) or Count Mode 3 ($T2CM_{1-0}$ = 11B), the timer operates in a dual slope fashion. The timer counts up from MIN to TOP and then counts down from TOP to MIN, following a sawtooth waveform as shown in Figure 12-7. The EXF2 bit is set/cleared by hardware to reflect the current count direction (Up = 0and Down = 1). The value of TOP stored in RCAP2H and RCAP2L is double-buffered such that a new TOP value takes affect only after an underflow. The only difference between Mode 2 and Mode 3 is when the interrupt flag is set. In Mode 2 TF2 is set once per count period when the timer underflows at MIN. In Mode 3 TF2 is set twice per count period, once when the timer overflows at TOP and once when the timer underflows at MIN. The interrupt service routine can check the EXF2 bit to determine if TF2 was set at TOP or MIN. These count modes are provided to support variable precision symmetrical PWM in the CCA. DCEN has no effect when using dual slope operation. The Timer 2 overflow rate for this mode is given in the following equation:

Auto-Reload Mode:
DCEN = 0, T2CM = 10B

$$\text{Time-out Period} = \frac{\{RCAP2H, RCAP2L\} \times 2}{\text{Oscillator Frequency}} \times (TPS + 1)$$

Figure 12-7. Timer 2 Waveform: Dual Slope Modes

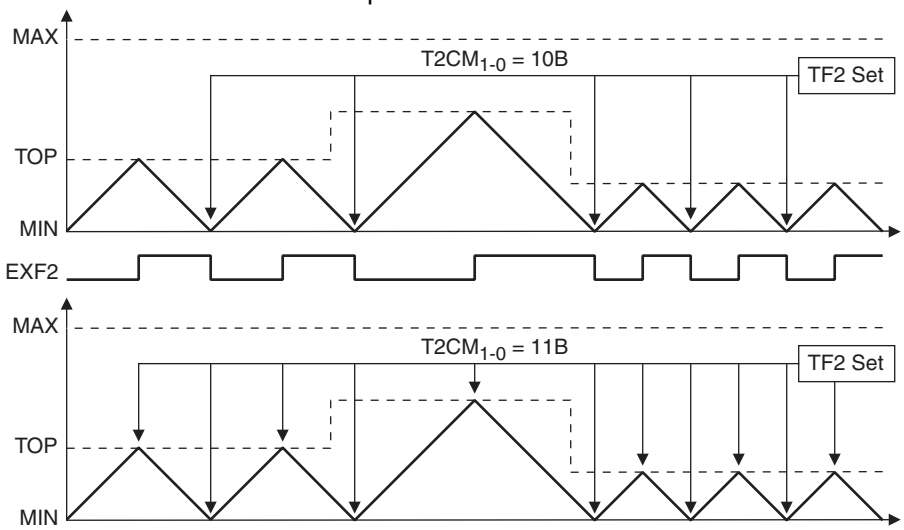

12.4 Baud Rate Generator

Timer 2 is selected as the baud rate generator by setting TCLK and/or RCLK in T2CON (Table 12-3). Note that the baud rates for transmit and receive can be different if Timer 2 is used for the receiver or transmitter and Timer 1 is used for the other function. Setting RCLK and/or TCLK puts Timer 2 into its baud rate generator mode, as shown in Figure 12-8.

The baud rate generator mode is similar to the auto-reload mode, in that a rollover in TH2 causes the Timer 2 registers to be reloaded with the 16-bit value in registers RCAP2H and RCAP2L, which are preset by software.

The baud rates in UART Modes 1 and 3 are determined by Timer 2's overflow rate according to the following equation.

$$\text{Modes 1 and 3 Baud Rates} = \frac{\text{Timer 2 Overflow Rate}}{16}$$

The Timer can be configured for either timer or counter operation. In most applications, it is configured for timer operation (CP/$\overline{T2}$ = 0). The baud rate formulas are given below.

$$\text{T2CM} = 00\text{B} \qquad \begin{matrix}\text{Modes 1, 3}\\ \text{Baud Rate}\end{matrix} = \frac{\text{Oscillator Frequency}}{16 \times (\text{TPS} + 1) \times [65536 - (\text{RCAP2H,RCAP2L})]}$$

$$\text{T2CM} = 01\text{B} \qquad \begin{matrix}\text{Modes 1, 3}\\ \text{Baud Rate}\end{matrix} = \frac{\text{Oscillator Frequency}}{16 \times (\text{TPS} + 1) \times [(\text{RCAP2H,RCAP2L}) + 1]}$$

where (RCAP2H, RCAP2L) is the content of RCAP2H and RCAP2L taken as a 16-bit unsigned integer.

Timer 2 as a baud rate generator is shown in Figure 12-8. This figure is valid only if RCLK or TCLK = 1 in T2CON. Note that a rollover in TH2 does not set TF2 and will not generate an interrupt. Note too, that if EXEN2 is set, a 1-to-0 transition in T2EX will set EXF2 but will not cause a reload from (RCAP2H, RCAP2L) to (TH2, TL2). Thus when Timer 2 is in use as a baud rate gen-

erator, T2EX can be used as an extra external interrupt. Also note that the Baud Rate and Frequency Generator modes may be used simultaneously.

Figure 12-8. Timer 2 in Baud Rate Generator Mode

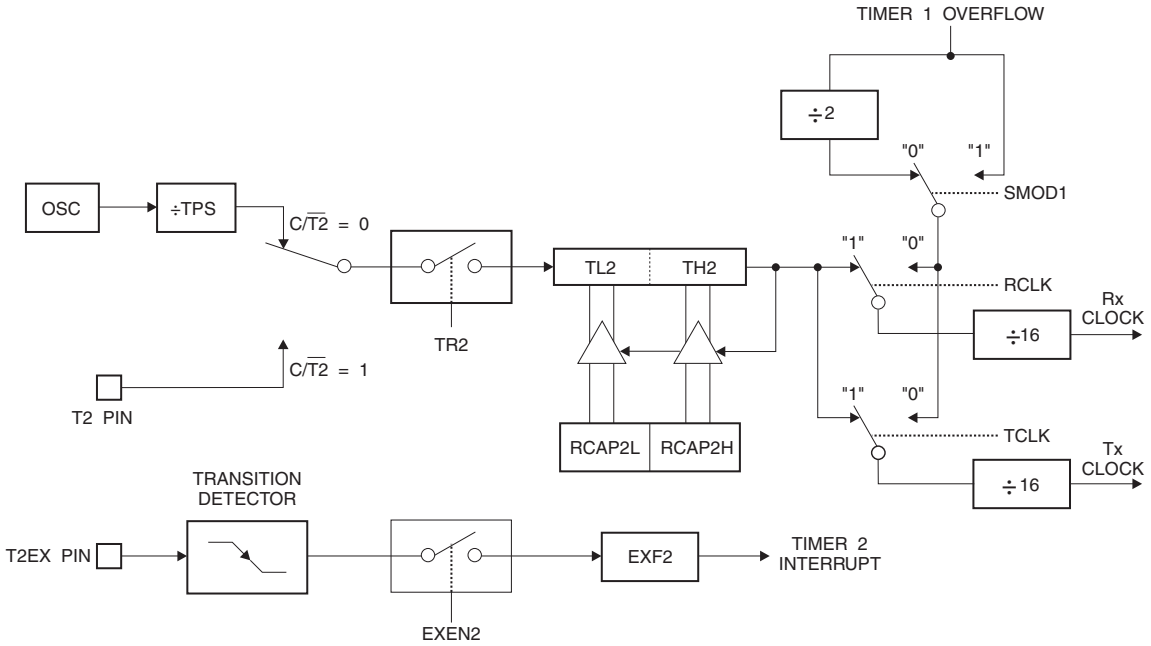

12.5 Frequency Generator (Programmable Clock Out)

Timer 2 can generate a 50% duty cycle clock on T2 (P1.0), as shown in Figure 12-9. This pin, besides being a regular I/O pin, has two alternate functions. It can be programmed to input the external clock for Timer/Counter 2 or to toggle its output at every timer overflow. To configure the Timer/Counter 2 as a clock generator, bit C/$\overline{T2}$ (T2CON.1) must be cleared and bit T2OE (T2MOD.1) must be set. Bit TR2 (T2CON.2) starts and stops the timer.

The clock-out frequency depends on the oscillator frequency and the reload value of Timer 2 capture registers (RCAP2H, RCAP2L), as shown in the following equations.

$$\text{T2CM} = 00\text{B} \qquad \text{Clock Out Frequency} = \frac{\text{Oscillator Frequency}}{2 \times [65536 - (\text{RCAP2H,RCAP2L})]} \times \frac{1}{\text{TPS} + 1}$$

$$\text{T2CM} = 01\text{B} \qquad \text{Clock Out Frequency} = \frac{\text{Oscillator Frequency}}{2 \times [(\text{RCAP2H,RCAP2L}) + 1]} \times \frac{1}{\text{TPS} + 1}$$

In the frequency generator mode, Timer 2 roll-overs will not generate an interrupt. This behavior is similar to when Timer 2 is used as a baud-rate generator. It is possible to use Timer 2 as a baud-rate generator and a clock generator simultaneously. Note, however, that the baud-rate and clock-out frequencies cannot be determined independently from one another since they both use RCAP2H and RCAP2L.

Figure 12-9. Timer 2 in Clock-out Mode

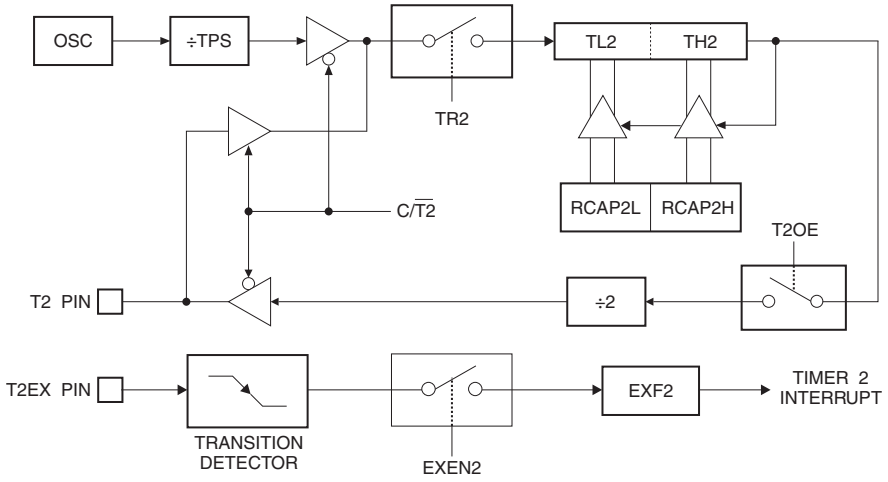

13. Compare/Capture Array

The AT89LP3240/6440 includes a four channel Compare/Capture Array (CCA) that performs a variety of timing operations including input event capture, output compare waveform generation and pulse width modulation (PWM). Timer 2 serves as the time base for the four 16-bit compare/capture modules. The CCA has the following features:

- Four 16-bit Compare/Capture channels
- Common time base provided by Timer 2
- Selectable external and internal capture events including pin change, timer overflow and comparator output change
- Symmetric/Asymmetric PWM with selectable polarity
- Multi-phasic PWM outputs
- One interrupt flag per channel with a common interrupt vector

The block diagram of the CCA is given in Figure 13-1. Each channel consists of an 8-bit control register and a 16-bit data register. The channel registers are not directly accessible. The CCA address register T2CCA provides an index into the array. The control, data low and data high bytes of the currently indexed channel are accessed through the T2CCC, T2CCL and T2CCH registers respectively.

Each channel can be individually configured for capture or compare mode. Capture mode is the default setting. During capture mode the current value of the time base is copied into the channel's data register when the specified external or internal event occurs. An interrupt flag is set at the same time and the time base may be optionally cleared. To enable compare mode, the CCM*x* bit in the channel's control register (CCC*x*) should be set to 1. In compare mode an interrupt flag is set and an output pin is optionally toggled when the value of the time base matches the value of the channel's data register. The time base may also be optionally cleared on a compare match.

Timer 2 must be running (TR2 = 1) in order to perform captures or compares with the CCA. However, when TR2 = 0 the external capture events will still set their associated flags and may be used as additional external interrupts.

Figure 13-1. Compare/Capture Array Block Diagram

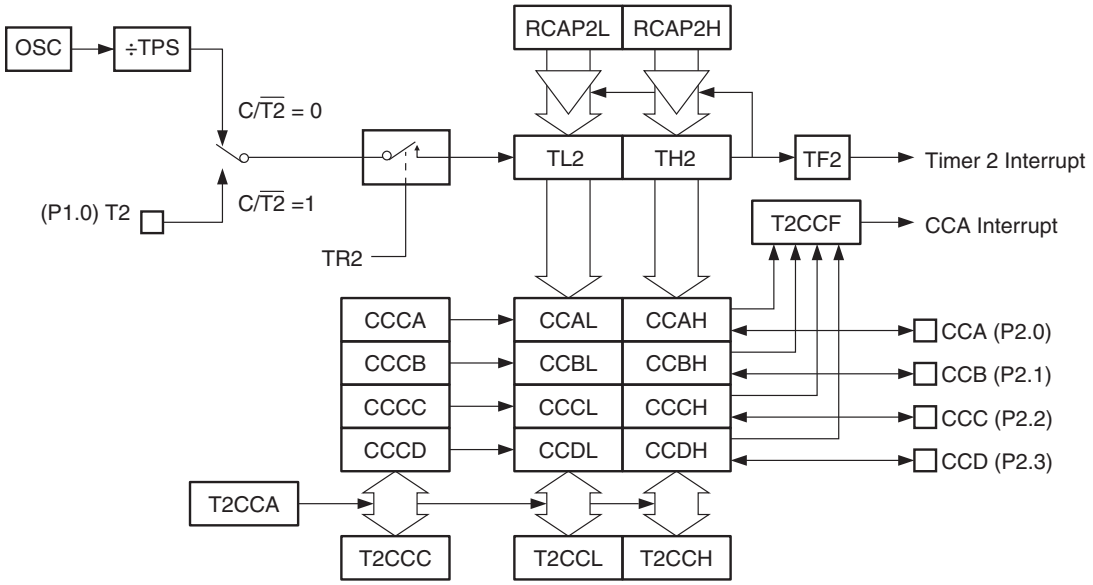

13.1 CCA Registers

The Compare/Capture Array has five Special Function Registers: T2CCA, T2CCC, T2CCL, T2CCH and T2CCF. The T2CCF register contains the interrupt flags for each CCA channel. The CCA interrupt is a logic OR of the bits in T2CCF. The flags are set by hardware when a compare/capture event occurs on the relevant channel and must be cleared by software. The T2CCF bits will only generate an interrupt when the ECC bit (IE2.1) is set and the CIEN*x* bit in the associated channel's CCC*x* register is set.

The T2CCC, T2CCL and T2CCH register locations are not true SFRs. These locations represent access points to the contents of the array. Writes/reads to/from the T2CCC, T2CCL and T2CCH locations will access the control, data low and data high bytes of the CCA channel currently selected by the index in T2CCA. Channels currently not indexed by T2CCA are not accessible.

When writing to T2CCH, the value is stored in a shadow register. When T2CCL is written, the 16-bit value formed by the contents of T2CCL and the T2CCH shadow is written into the array. Therefore, T2CCH must be written prior to writing T2CCL. All four channels use the same T2CCH shadow register. If the value of T2CCH remains constant for multiple writes, there is no need to update T2CCH between T2CCL writes. Every write to T2CCL will use the last value of T2CCH for the upper data byte. It is not possible to write to the data register of a channel configured for capture mode.

The configuration bits for each channel are stored in the CCC*x* registers accessible through T2CCC. See Table 13-5 on page 74 for a description of the CCC*x* register.

Table 13-1. T2CCA – Timer/Counter 2 Compare/Capture Address

T2CCA Address = 0D1H — Reset Value = xxxx xx00B

Not Bit Addressable

	—	—	—	—	—	—	T2CCA.1	T2CCA.0
Bit	7	6	5	4	3	2	1	0

Symbol	Function
T2CCA [1-0]	Compare/Capture Address. Selects which CCA channel is currently accessible through the T2CCH, T2CCL and T2CCC registers. Only one channel may be accessed at a time. **T2CCA1** **T2CCA0** **Channel** 0 0 A – T2CCH, T2CCL and T2CCC access data and control for Channel A 0 1 B – T2CCH, T2CCL and T2CCC access data and control for Channel B 1 0 C – T2CCH, T2CCL and T2CCC access data and control for Channel C 1 1 D – T2CCH, T2CCL and T2CCC access data and control for Channel D

Table 13-2. T2CCH – Timer/Counter 2 Compare/Capture Data High

T2CCH Address = 0D2H — Reset Value = 0000 0000B

Not Bit Addressable

	T2CCD.15	T2CCD.14	T2CCD.13	T2CCD.12	T2CCD.11	T2CCD.10	T2CCD.9	T2CCD.8
Bit	7	6	5	4	3	2	1	0

Symbol	Function
T2CCD [15-8]	Compare/Capture Data (High Byte). Reads from T2CCH will return the high byte from the CCA channel currently selected by T2CCA. The high byte of the selected CCA channel will be updated with the contents of T2CCH when T2CCL is written. When writing multiple channels with the same high byte, T2CCH need not be updated between writes to T2CCL.

Note: All writes/reads to/from T2CCH will access channel *X* as currently selected by T2CCA.The data registers for the remaining unselected channels are not accessible.

Table 13-3. T2CCL – Timer/Counter 2 Compare/Capture Data Low

T2CCC Address = 0D3H — Reset Value = 0000 0000B

Not Bit Addressable

	T2CCD.7	T2CCD.6	T2CCD.5	T2CCD.4	T2CCD.3	T2CCD.2	T2CCD.1	T2CCD.0
Bit	7	6	5	4	3	2	1	0

Symbol	Function
T2CCD [7-0]	Compare/Capture Data (Low Byte). Reads from T2CCL will return the low byte from the CCA channel currently selected by T2CCA. Writes to T2CCL will update the selected CCA channel with the 16-bit contents of T2CCH and T2CCL.

Note: All writes/reads to/from T2CCL will access channel *X* as currently selected by T2CCA.The data registers for the remaining unselected channels are not accessible.

Table 13-4. T2CCF – Timer/Counter 2 Compare/Capture Flags

T2CCF Address = 0D5H							Reset Value = XXXX 0000B
Not Bit Addressable							
	–	–	–	–	CCFD	CCFC	CCFB	CCFA
Bit	7	6	5	4	3	2	1	0

Symbol	Function
CCFD	Channel D Compare/Capture Interrupt Flag. Set by a compare/capture event on channel D. Must be cleared by software. CCFD will generate an interrupt when CIEND = 1 and ECC = 1.
CCFC	Channel C Compare/Capture Interrupt Flag. Set by a compare/capture event on channel C. Must be cleared by software. CCFC will generate an interrupt when CIENC = 1 and ECC = 1.
CCFB	Channel B Compare/Capture Interrupt Flag. Set by a compare/capture event on channel B. Must be cleared by software. CCFB will generate an interrupt when CIENB = 1 and ECC = 1.
CCFA	Channel A Compare/Capture Interrupt Flag. Set by a compare/capture event on channel A. Must be cleared by software. CCFA will generate an interrupt when CIENA = 1 and ECC = 1.

13.2 Input Capture Mode

The Compare/Capture Array provides a variety of capture modes suitable for time-stamping events or performing measurements of pulse width, frequency, slope, etc. CCA channels are configured for capture mode by clearing the CCM*x* bit in the associated CCC*x* register to 0. Each time a capture event occurs, the contents of Timer 2 (TH2 and TL2) are transferred to the 16-bit data register of the corresponding channel, and the channel's interrupt flag CCF*x* is set in T2CCF. Optionally, the capture event may also clear Timer 2 to 0000H by setting the CTC*x* bit in CCC*x*. The capture event is defined by the C*x*M_{2-0} bits in CCC*x* and may be either externally or internally generated. A diagram of a CCA channel in capture mode is shown in Figure 13-2.

Figure 13-2. CCA Capture Mode Diagram

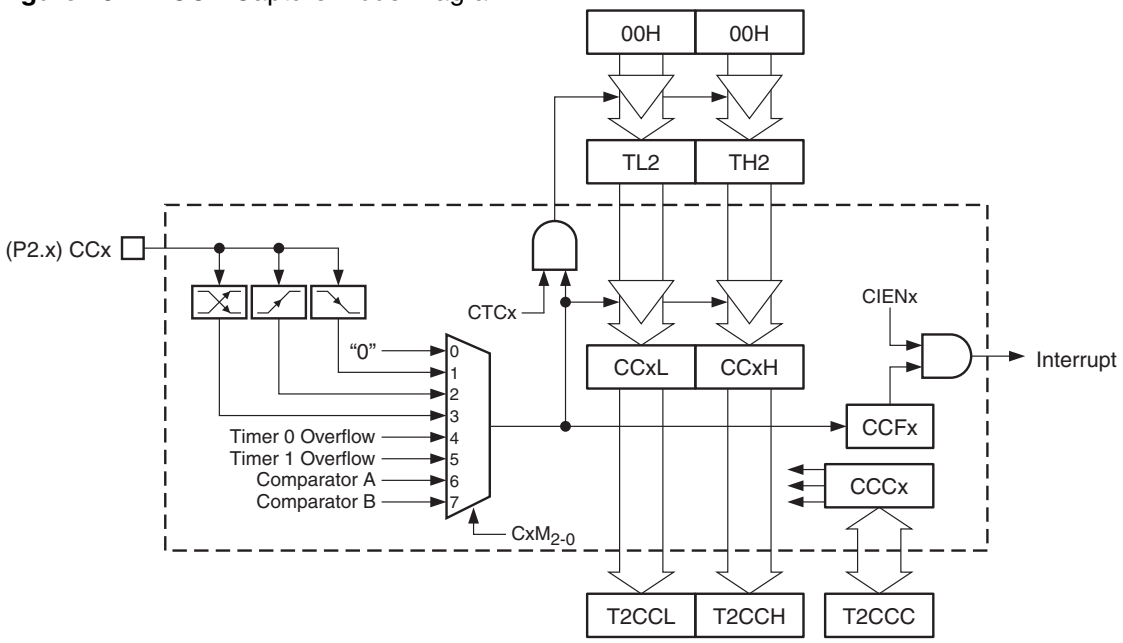

Each CCA channel has an associated external capture input pin: CCA (P2.0), CCB (P2.1), CCC (P2.2) and CCD (P2.3). External capture events are always edge-triggered and can be selected

to occur at a negative edge, positive edge, or both (toggle). Capture inputs are sampled every clock cycle and a new value must be held for at least 2 clock cycles to be correctly sampled by the device. The maximum achievable capture rate will be determined by how fast the software can retrieve the captured data. There is no protection against capture events overrunning the data register.

Capture events may also be triggered internally by the overflows of Timer 0 or Timer 1, or by an event from the dual analog comparators. Any comparator event which can generate a comparator interrupt may also be used as a capture event. However, Timer 2 should not be selected as the comparator clock source when using the comparator as the capture trigger.

When the DAC output is enabled on P2.2 and P2.3, channels C and D cannot use their external pin capture modes. However, those channels may still use the timer or comparator triggers to capture data. The same applies for all four channels when Port 2 is used for the external memory interface.

13.2.1 Timer 2 Operation for Capture Mode

Capture channels are intended to work with Timer 2 in capture mode CP/$\overline{RL2}$ = 1. Captures can still occur when Timer 2 operates in other modes; however, the full 16-bit count range may not be available. The TF2 flag can be used to determine if the timer overflowed before the capture occurred. If the timer is operating in dual-slope mode (CP/$\overline{RL2}$ = 0, $T2CM_{1-0}$ = 1xB), the count direction (Up = 0 and Down = 1) at the time of the event will be captured into the channel's CDIR*x* bit in CCC*x*. CTC*x* must be cleared to 0 for all channels if Timer 2 is operating in Baud Rate mode or errors may occur in the serial communication.

Table 13-5. T2CCC – Timer/Counter 2 Compare/Capture Control

T2CCC Address = 0D4H — Reset Value = 00X0 0000B

Not Bit Addressable

	CIEN*x*	CDIR*x*	–	CTC*x*	CCM*x*	C*x*M2	C*x*M1	C*x*M0
Bit	7	6	5	4	3	2	1	0

Symbol	Function
CIEN*x*	Channel *X* Interrupt Enable. When set, channel *X*'s interrupt flag, CCF*x* in T2CCF, will generate an interrupt when ECC = 1. Clear to disable interrupts from channel *X*.
CDIR*x*	Channel *X* Capture Direction. In dual-slope modes, a compare/capture event on channel *X* will store the current count direction into CDIR*x*. Up-counting = 0 and down-counting = 1. Modifying this bit has no effect.
CTC*x*	Clear Timer on Compare/Capture of Channel *X*. When set, the Timer 2 registers TL2 and TH2 will be cleared by a compare/capture event on channel *X*. When cleared, Timer 2 is unaffected by channel *X* events.
CCM*x*	Channel *X* Compare/Capture Mode. When CCM*x* = 1, channel *X* operates in compare mode. When CCM*x* = 0, channel *X* operates in capture mode.
CxM[2-0]	Channel *X* Mode. Selects the output/input events for compare/capture channel *X*.

C*x*M2	C*x*M1	C*x*M0	Capture Event (CCM*x* = 0)
0	0	0	Disabled
0	0	1	Trigger on negative edge of CC*x* pin
0	1	0	Trigger on positive edge of CC*x* pin
0	1	1	Trigger on either edge of CC*x* pin
1	0	0	Trigger on Timer 0 overflow
1	0	1	Trigger on Timer 1 overflow
1	1	0	Trigger on Analog Comparator A Event(2)
1	1	1	Trigger on Analog Comparator B Event(3)

C*x*M2	C*x*M1	C*x*M0	Compare Action (CCM*x* = 1)
0	0	0	Output disabled (interrupt only)
0	0	1	Set CC*x* pin on compare match
0	1	0	Clear CC*x* pin on compare match
0	1	1	Toggle CC*x* pin on compare match
1	0	0	Inverting Pulse Width Modulation(4)
1	0	1	Non-Inverting Pulse Width Modulation(4)
1	1	0	Reserved
1	1	1	Reserved

Notes:
1. All writes/reads to/from T2CCC will access channel *X* as currently selected by T2CCA.The control registers for the remaining unselected channels are not accessible.
2. Analog Comparator A events are determined by the CMA_{2-0} bits in ACSRA. See Table 19-1 on page 130.
3. Analog Comparator B events are determined by the CMB_{2-0} bits in ACSRB. See Table 19-2 on page 131.
4. Asymmetrical versus Symmetrical PWM is determined by the Timer 2 Count Mode. See Section 13.4 on page 77.

13.3 Output Compare Mode

The Compare/Capture Array provides a variety of compare modes suitable for event timing or waveform generation. CCA channels are configured for compare mode by setting the CCM*x* bit in the associated CCC*x* register to 1. A compare event occurs when the 16-bit contents of a channel's data register match the contents of Timer 2 (TH2 and TL2). The compare event also sets the channel's interrupt flag CCF*x* in T2CCF and may optionally clear Timer 2 to 0000H if the CTC*x* bit in CCC*x* is set. A diagram of a CCA channel in compare mode is shown in Figure 13-3.

Figure 13-3. CCA Compare Mode Diagram

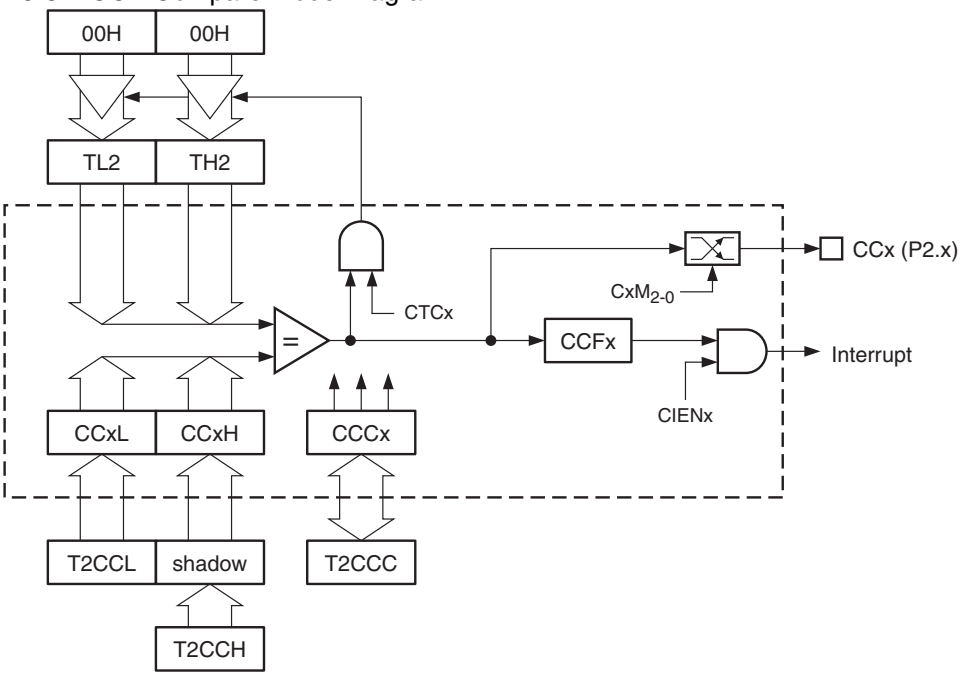

13.3.1 Waveform Generation

Each CCA channel has an associated external compare output pin: CCA (P2.0), CCB (P2.1), CCC (P2.2) and CCD (P2.3). The C*x*M$_{2-0}$ bits in CCC*x* determine what action is taken when a compare event occurs. The output pin may be set to 1, cleared to 0 or toggled. Output actions take place even if the interrupt is disabled; however, the associated I/O pin must be set to the desired output mode before the compare event occurs. The state of the compare outputs are initialized to 1 by reset. Channels C and D cannot use their output pin when the DAC is enabled. These channels may still be used to generate interrupts or to clear the timebase. The same applies to all four channels when Port 2 is used for the external memory interface.

Multiple compare events per channel can occur within a single time period, provided that the software has time to update the compare value before the timer reaches the next compare point. In this case other interrupts should be disabled or the CCA interrupt given a higher priority in order to ensure that the interrupt is serviced in time.

A wide range of waveform generation configurations are possible using the various operating modes of Timer 2 and the CCA. Some example configurations are detailed below. Pulse width modulation is a special case of output compare. See Section 13.4 on page 77 for more details of PWM operation.

13.3.1.1 Normal Mode

The simplest waveform mode is when CP/$\overline{RL2}$ = 0 and T2CM$\overline{1\text{-}0}$ = 01B. In this mode the frequency of the output is determined by the TOP value stored in RCAP2L and RCAP2H and output edges occur at fractions of the timer period. Figure 13-4 shows an example of outputting two waveforms of the same frequency but different phase by using the toggle on match action. More complex waveforms are achieved by changing the TOP value and the compare values more frequently.

Figure 13-4. Normal Mode Waveform Example

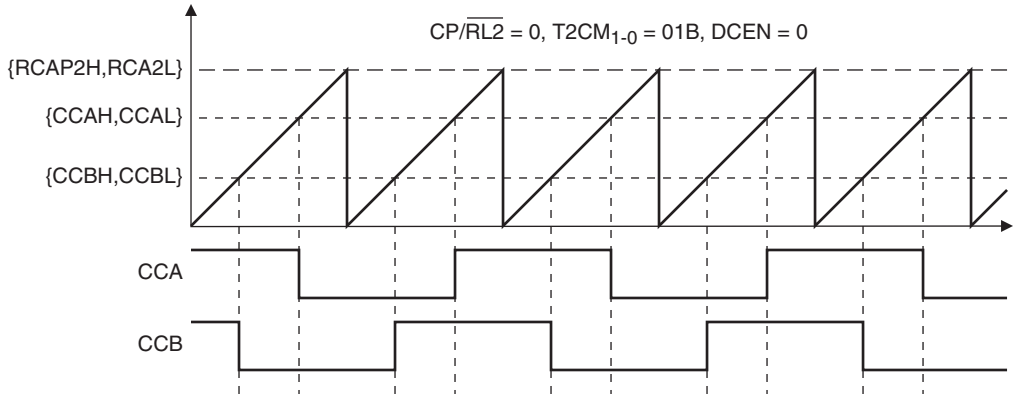

13.3.1.2 Clear-Timer-on-Compare Mode

Clear-Timer-on-Compare (CTC) mode occurs when the CTC*x* bit of a compare channel is set to one. CTC Mode works best when Timer 2 is in capture mode (CP/$\overline{RL2}$ = 1) to allow the full range of compare values. In CTC Mode the compare value defines the interval between output events because the timer is cleared after every compare match. Figure 13-5 shows an example waveform using the toggle on match action in CTC Mode.

Figure 13-5. CTC Mode Waveform Example

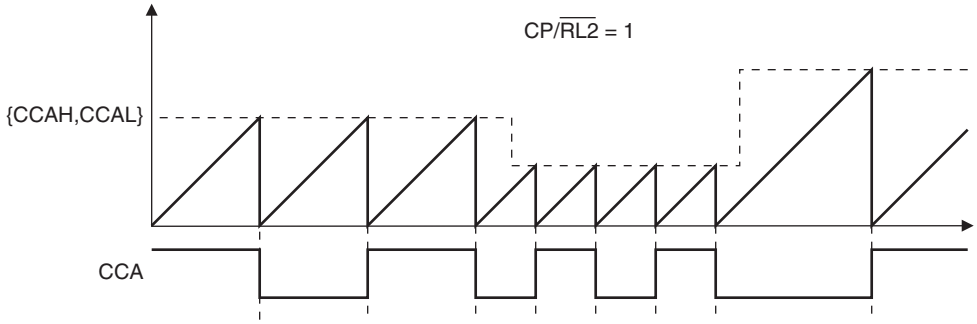

13.3.1.3 Dual-Slope Mode

The dual-slope mode occurs when CP/$\overline{RL2}$ = 0 and T2CM$_{1\text{-}0}$ = 1xB. In this mode the frequency of the output is determined by the TOP value stored in RCAP2L and RCAP2H and output edges occur at fractions of the timer period on both the up and down count. Figure 13-6 shows an example of outputting two symmetrical waveforms using the toggle on match action. More complex waveforms are achieved by changing the TOP value and the compare values more frequently.

Figure 13-6. Dual-Slope Waveform Example

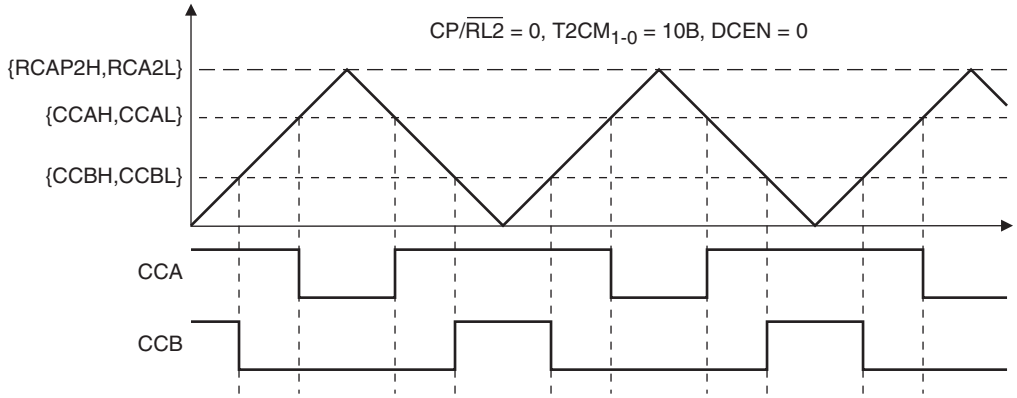

13.3.2 Timer 2 Operation for Compare Mode

Compare channels will work with any Timer 2 operating mode. The full 16-bit compare range may not be available in all modes. In order for a compare output action to take place, the compare values must be within the counting range of Timer 2. CTC*x* must be cleared to 0 for all channels if Timer 2 is operating in Baud Rate mode or errors may occur in the serial communication.

13.4 Pulse Width Modulation Mode

In Pulse Width Modulation (PWM) Mode, a compare channel can output a square wave with programmable frequency and duty cycle. Setting CCMx = 1 and CxM$_{2-0}$ = 10xB enables PWM Mode. PWM Mode is similar to Output Compare Mode except that the compare value is double-buffered. A diagram of a CCA channel in PWM Mode is shown in Figure 13-7. The PWM polarity is selectable between inverting and non-inverting modes. PWM is intended for use with Timer 2 in Auto-Reload Mode (CP/$\overline{RL2}$ = 0, DCEN = 0) using count modes 1, 2 or 3. The PWM can operate in asymmetric (edge-aligned) or symmetric (center-aligned) mode depending on the T2CM selection. The CCA PWM has variable precision from 2 to 16 bits. A trade-off between frequency and precision is made by changing the TOP value of the timer. The CCA PWM always uses the greatest precision allowable for the selected output frequency, as compared to Timer 0 and 1 whose PWMs are fixed at 8-bit precision regardless of frequency.

Figure 13-7. CCA PWM Mode Diagram

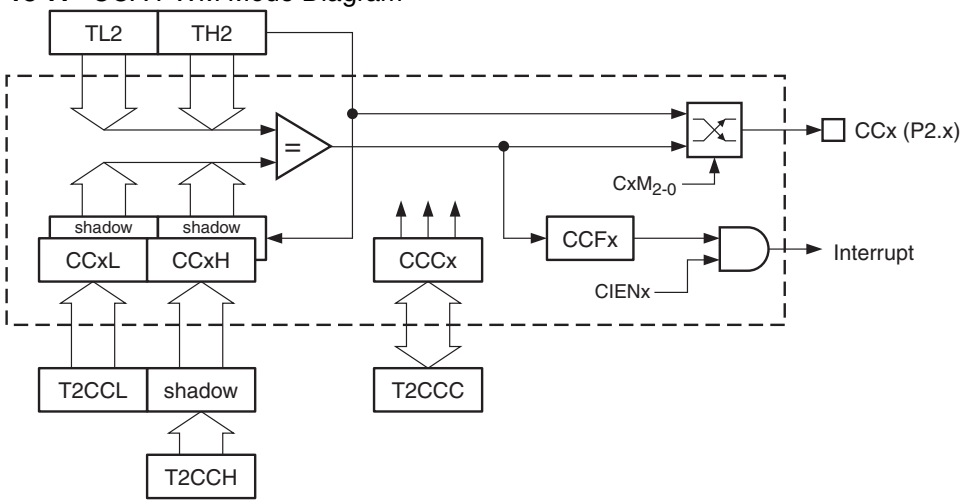

13.4.1 Asymmetrical PWM

For Asymmetrical PWM, Timer 2 should be configured for Auto-Reload mode and Count Mode 1 (CP/$\overline{RL2}$ = 0, DCEN = 0, T2CM$\overline{1\text{-}0}$ = 01B). Asymmetrical PWM uses single slope operation as shown in Figure 13-8. The timer counts up from BOTTOM to TOP and then restarts from BOTTOM. In non-inverting mode, the output CC*x* is set on the compare match between Timer 2 (TL2, TH2) and the channel data register (CC*x*L, CC*x*H), and cleared at BOTTOM. In inverting mode, the output CC*x* is cleared on the compare match between Timer 2 and the data register, and set at BOTTOM. The resulting asymmetrical output waveform is left-edge aligned.

The TOP value in RCAP2L and RCAP2H is double buffered such that the output frequency is only updated at the TOP to BOTTOM overflow. The channel data register (CC*x*L, CC*x*H) is also double-buffered such that the duty cycle is only updated at the TOP to BOTTOM overflow to prevent glitches. The output frequency and duty cycle for asymmetrical PWM are given by the following equations:

$$f_{OUT} = \frac{\text{Oscillator Frequency}}{\{RCAP2H, RCAP2L\} + 1} \times \frac{1}{TPS + 1}$$

$$\text{Inverting:} \quad \text{Duty Cycle} = 100\% \times \frac{\{CCxH, CCxL\}}{\{RCAP2H, RCAP2L\} + 1}$$

$$\text{Non-Inverting:} \quad \text{Duty Cycle} = 100\% \times \frac{\{RCAP2H, RCAP2L\} - \{CCxH, CCxL\} + 1}{\{RCAP2H, RCAP2L\} + 1}$$

The extreme compare values represent special cases when generating a PWM waveform. If the compare value is set equal to (or greater than) TOP, the output will remain low or high for non-inverting and inverting modes, respectively. If the compare value is set to BOTTOM (0000H), the output will remain high or low for non-inverting and inverting modes, respectively.

Figure 13-8. Asymmetrical (Edge-Aligned) PWM

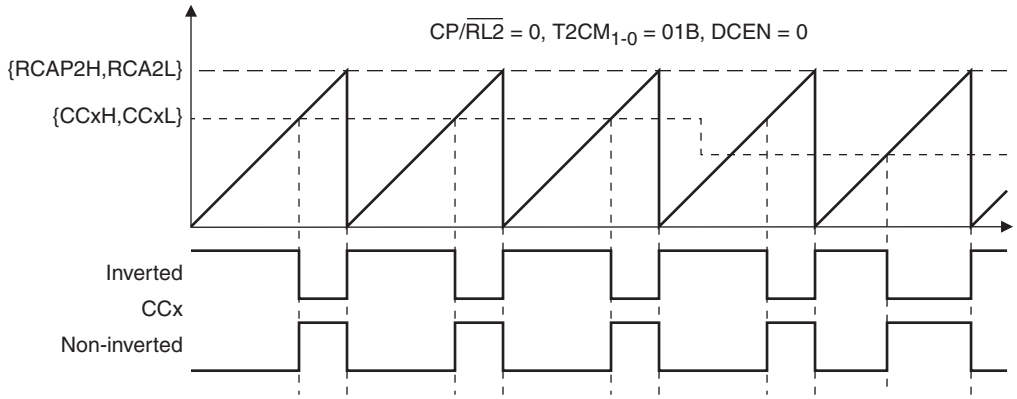

13.4.2 Symmetrical PWM

For Symmetrical PWM, Timer 2 should be configured for Auto-Reload mode and Count Mode 2 or 3 (CP/$\overline{RL2}$ = 0, DCEN = 0, T2CM$\overline{1\text{-}0}$ = 1xB). Symmetrical PWM uses dual-slope operation as shown in Figure 13-9. The timer counts up from MIN to TOP and then counts down from TOP to MIN. The timer is equal to TOP for exactly one clock cycle. In non-inverting mode, the output CC*x* is cleared on the up-count compare match between Timer 2 (TL2, TH2) and the channel data register (CC*x*L, CC*x*H), and set at the down-count compare match. In inverting mode, the output CC*x* is set on the up-count compare match between Timer 2 and the data register, and cleared at the down-count compare match. The resulting symmetrical PWM output waveform is

center-aligned around the timer equal to TOP point. Symmetrical PWM may be used to generate non-overlapping waveforms.

The TOP value in RCAP2L and RCAP2H is double buffered such that the output frequency is only updated at the underflow. The channel data register (CC*x*L, CC*x*H) is also double-buffered to prevent glitches. The output frequency and duty cycle for symmetrical PWM are given by the following equations:

$$f_{OUT} = \frac{\text{Oscillator Frequency}}{2 \times \{\text{RCAP2H}, \text{RCAP2L}\}} \times \frac{1}{\text{TPS} + 1}$$

$$\text{Non-Inverting:} \quad \text{Duty Cycle} = 100\% \times \frac{\{\text{CCxH}, \text{CCxL}\}}{\{\text{RCAP2H}, \text{RCAP2L}\}}$$

$$\text{Inverting:} \quad \text{Duty Cycle} = 100\% \times \frac{\{\text{RCAP2H}, \text{RCAP2L}\} - \{\text{CCxH}, \text{CCxL}\}}{\{\text{RCAP2H}, \text{RCAP2L}\}}$$

The extreme compare values represent special cases when generating a PWM waveform. If the compare value is set equal to (or greater than) TOP, the output will remain high or low for non-inverting and inverting modes, respectively. If the compare value is set to MIN (0000H), the output will remain low or high for non-inverting and inverting modes, respectively.

Figure 13-9. Non-overlapping Waveforms Using Symmetrical PWM

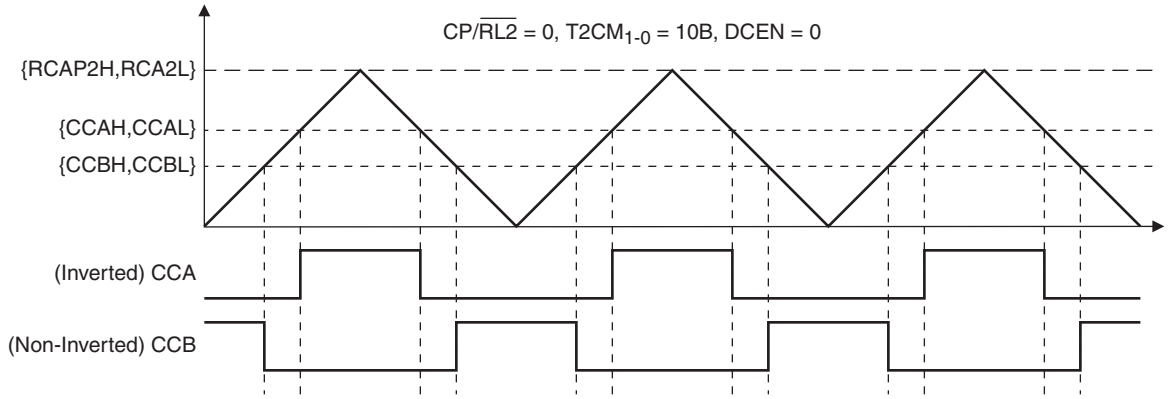

13.4.2.1 *Phase and Frequency Correct PWM*

When T2CM$_{1-0}$ = 10B the Symmetrical PWM operates in phase and frequency correct mode. In this mode the compare value double buffer is only updated when the timer equals MIN (underflow). This guarantees that the resulting waveform is always symmetrical around the TOP value as shown in Figure 13-10 because the up and down count compare values are identical. The TF2 interrupt flag is only set at underflow.

13.4.2.2 *Phase Correct PWM*

When T2CM$_{1-0}$ = 11B the Symmetrical PWM operates in phase correct mode. In this mode the compare value double buffer is updated when the timer equals MIN (underflow) and TOP (overflow). The resulting waveform may not be completely symmetrical around the TOP value as shown in Figure 13-11 because the up and down count compare values may not be identical. However, this allows the pulses to be weighted toward one edge or another. The TF2 interrupt flag is set at both underflow and overflow.

Figure 13-10. Phase and Frequency Correct Symmetrical (Center-Aligned) PWM

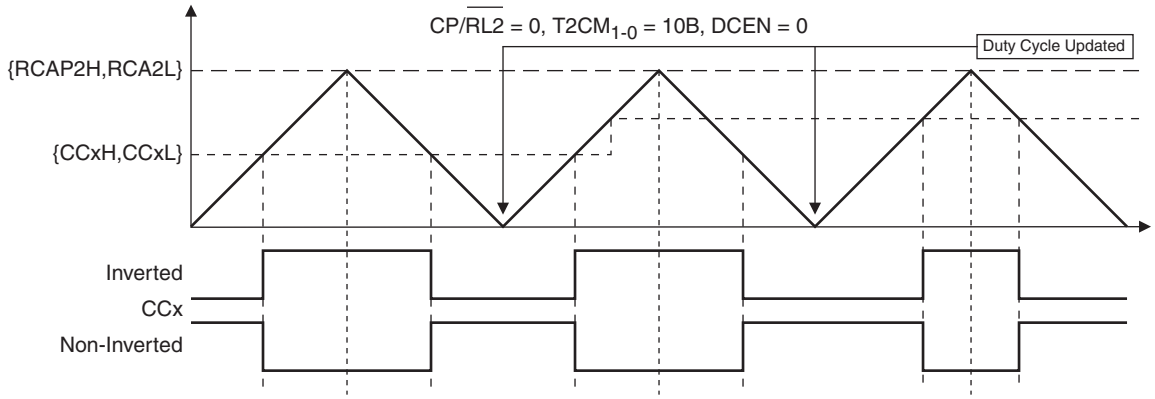

Figure 13-11. Phase Correct Symmetrical (Center-Aligned) PWM

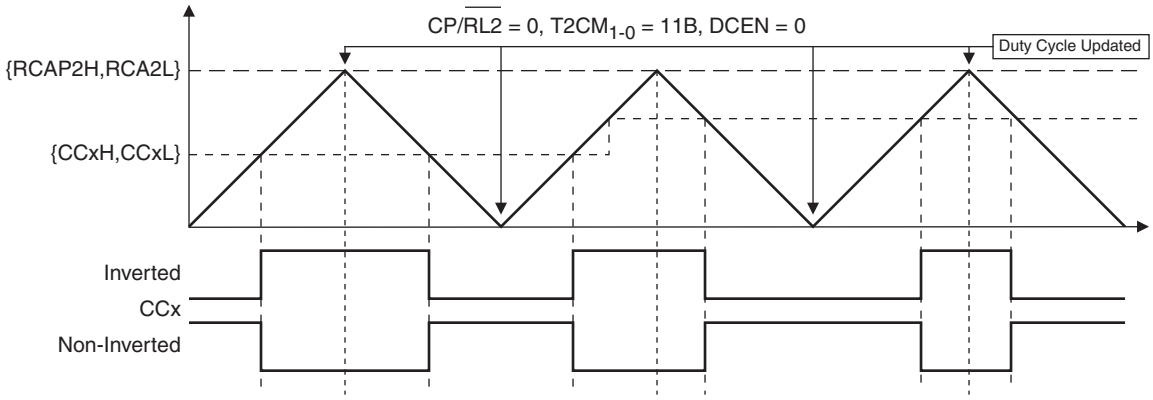

13.4.3 Multi-Phasic PWM

The PWM channels may be configured to provide multi-phasic alternating outputs by the PHS_{2-0} bits in T2MOD. The AT89LP3240/6440 provides 1 out of 2, 1 out of 3, 1 out of 4 and 2 out of 4 phase modes (See Table 13-6). In Multi-phasic mode the PWM outputs on CCA, CCB, CCC and CCD are connected to a one-hot shift register that selectively enables and disables the outputs (See Figure 13-12). Compare points on disabled channels are blocked from toggling the output as if the compare value was set equal to TOP. The PHSD bit in T2MOD controls the direction of the shift register. Example waveforms are shown in Figure 13-14 on page 82. In order to use multi-phasic PWM, the associated channels must be configured for PWM operation. Non-PWM channels are not affected by multi-phasic operation. However, their locations in the shift register are maintained such that some periods in the PWM outputs may not have any pulses as shown in Figure 13-13.

The PHS_{2-0} bits may only be modified when the timer is not operational (TR2 = 0). Updates to PHSD are allowed at any time. Note that channels C and D in 1:2 phase mode and channel D in 1:3 phase mode operate normally.

Table 13-6. Summary of Multi-Phasic Modes

PHS_{2-0}	Mode	Behavior	
		PHSD = 0	**PHSD = 1**
000	Off	Normal Operation (all channels active at all times)	
001	1:2	A →B →A →B	B →A →B →A
010	1:3	A →B →C →A →B →C	C →B →A →C →B →A
011	1:4	A →B →C →D →A →B →C →D	D →C →B →A →D →C →B →A
100	2:4	A →B →A →B C →D →C →D	B →A →B →A D →C →D →C

Figure 13-12. Multi-Phasic PWM Output Stage

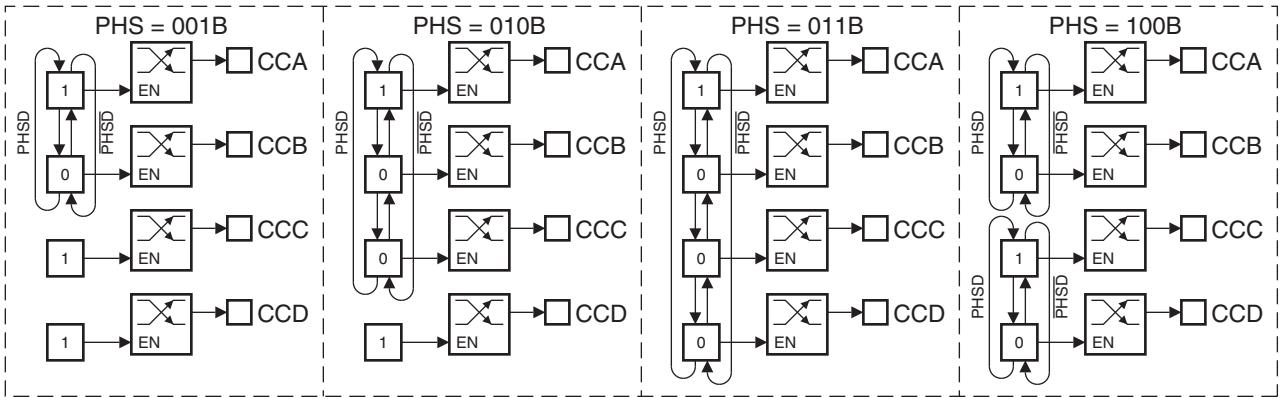

Figure 13-13. Three-Phase Mode with Channel B Disabled

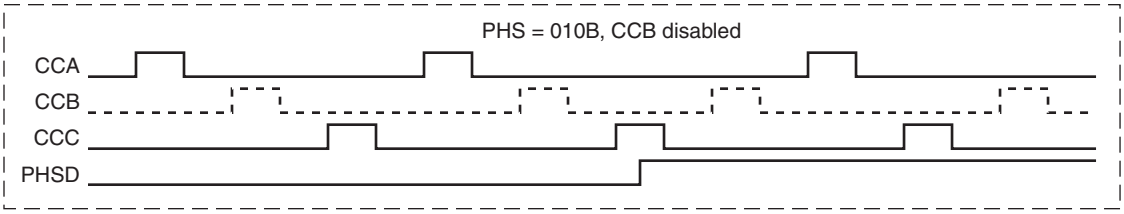

Figure 13-14. Multi-Phasic PWM Modes

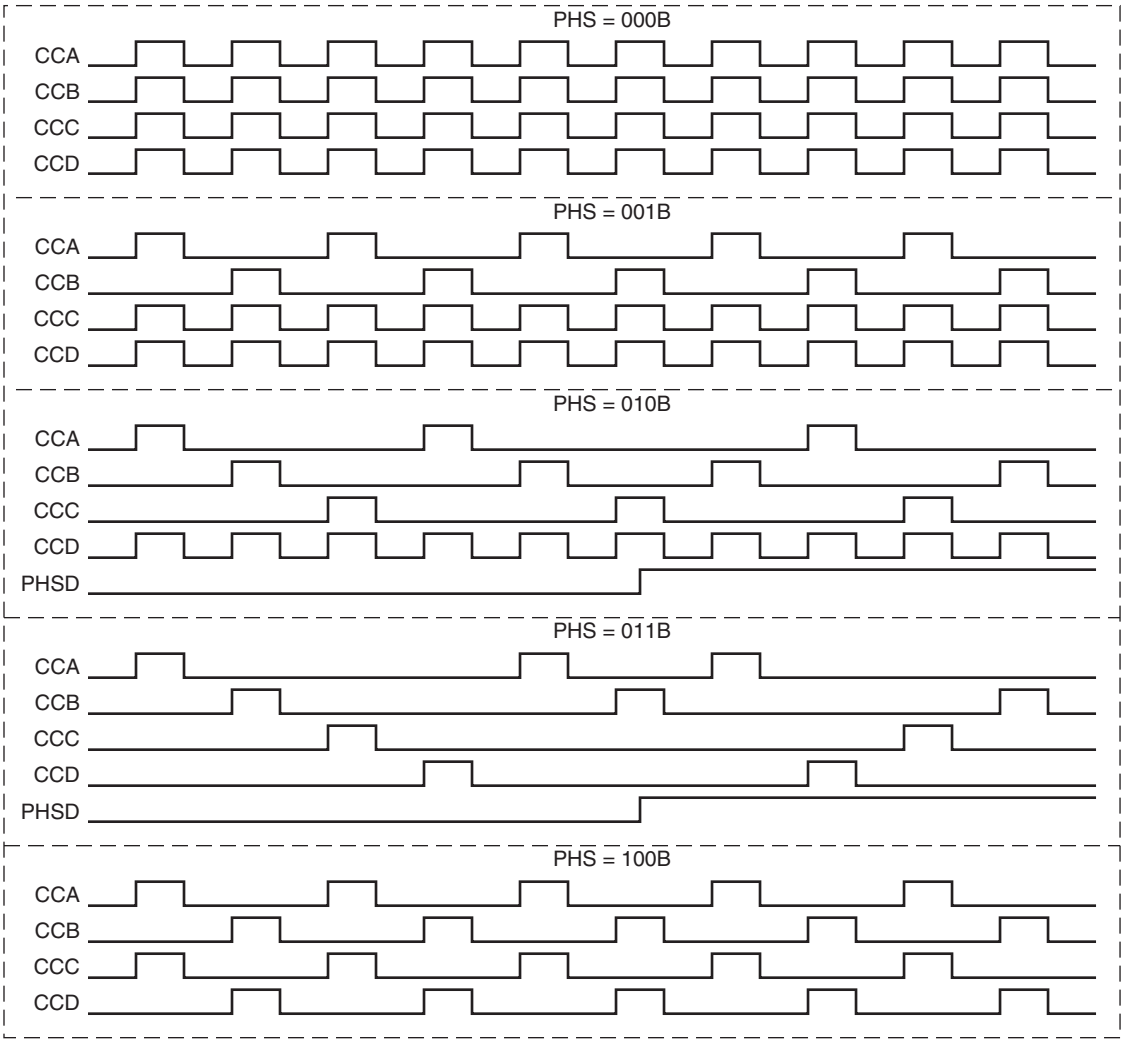

14. External Interrupts

The $\overline{\text{INT0}}$ (P3.2) and $\overline{\text{INT1}}$ (P3.3) pins of the AT89LP3240/6440 may be used as external interrupt sources. The external interrupts can be programmed to be level-activated or transition-activated by setting or clearing bit IT1 or IT0 in Register TCON. If ITx = 0, external interrupt x is triggered by a detected low at the $\overline{\text{INTx}}$ pin. If ITx = 1, external interrupt x is edge-triggered. In this mode if successive samples of the $\overline{\text{INTx}}$ pin show a high in one cycle and a low in the next cycle, interrupt request flag IEx in TCON is set. Flag bit IEx then requests the interrupt. Since the external interrupt pins are sampled once each clock cycle, an input high or low should hold for at least 2 oscillator periods to ensure sampling. If the external interrupt is transition-activated, the external source has to hold the request pin high for at least two clock cycles, and then hold it low for at least two clock cycles to ensure that the transition is seen so that interrupt request flag IEx will be set. IEx will be automatically cleared by the CPU when the service routine is called if generated in edge-triggered mode. If the external interrupt is level-activated, the external source has to hold the request active until the requested interrupt is actually generated. Then the external source must deactivate the request before the interrupt service routine is completed, or else

another interrupt will be generated. Both $\overline{INT0}$ and $\overline{INT1}$ may wake up the device from the Power-down state.

15. General-purpose Interrupts

The General-purpose Interrupt (GPI) function provides 8 configurable external interrupts on Port 1. Each port pin can detect high/low levels or positive/negative edges. The GPIEN register select which bits of Port 1 are enabled to generate an interrupt. The GPMOD and GPLS registers determine the mode for each individual pin. GPMOD selects between level-sensitive and edge-triggered mode. GPLS selects between high/low in level mode and positive/negative in edge mode. A block diagram is shown in Figure 15-1. The pins of Port 1 are sampled every clock cycle. In level-sensitive mode, a valid level must appear in two successive samples before generating the interrupt. In edge-triggered mode, a transition will be detected if the value changes from one sample to the next. When an interrupt condition on a pin is detected, and that pin is enabled, the appropriate flag in the GPIF register is set. The flags in GPIF must be cleared by software. Any GPI interrupt may wake up the device from the Power-down state.

Figure 15-1. GPI Block Diagram

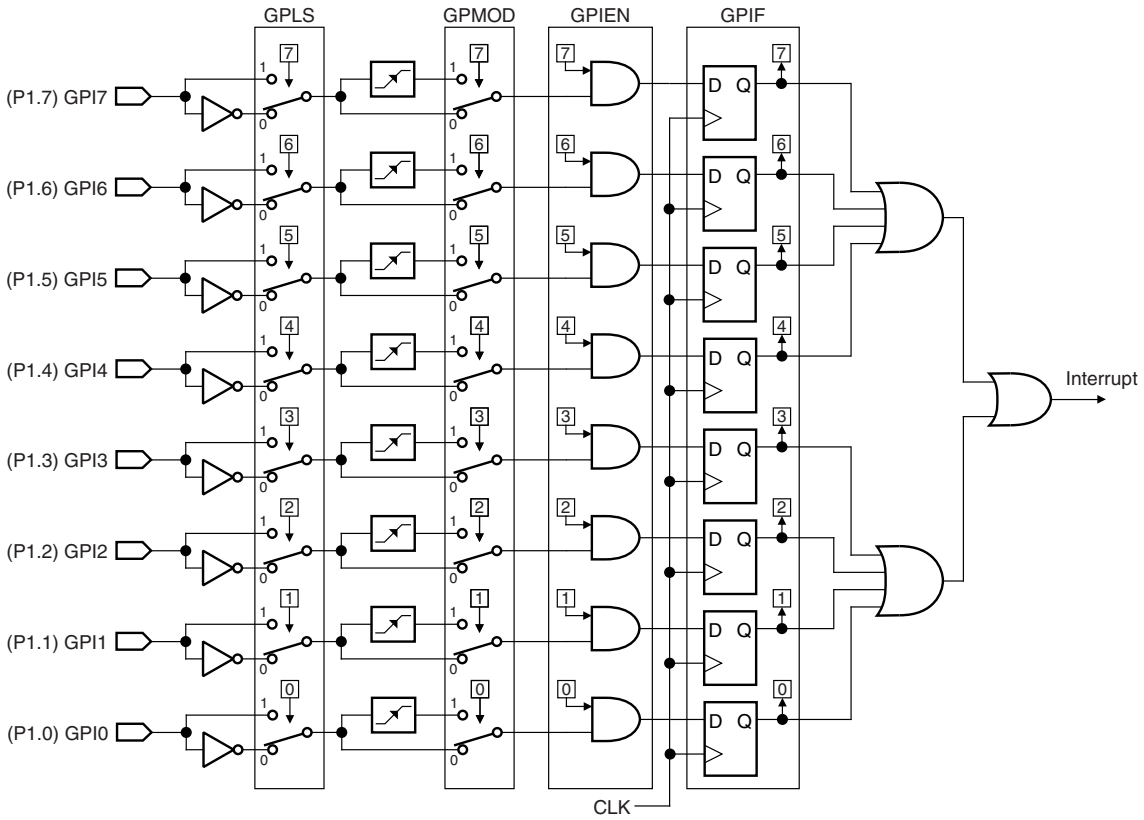

Table 15-1. GPMOD – General-purpose Interrupt Mode Register

GPMOD = 9AH — Reset Value = 0000 0000B

Not Bit Addressable

	GPMOD7	GPMOD6	GPMOD5	GPMOD4	GPMOD3	GPMOD2	GPMOD1	GPMOD0
Bit	7	6	5	4	3	2	1	0

GPMOD.x 0 = level-sensitive interrupt for P1.x

1 = edge-triggered interrupt for P1.x

Table 15-2. GPLS – General-purpose Interrupt Level Select Register

GPLS = 9BH — Reset Value = 0000 0000B

Not Bit Addressable

	GPLS7	GPLS6	GPLS5	GPLS4	GPLS3	GPLS2	GPLS1	GPLS0
Bit	7	6	5	4	3	2	1	0

GPMOD.x 0 = detect low level or negative edge on P1.x

1 = detect high level or positive edge on P1.x

Table 15-3. GPIEN – General-purpose Interrupt Enable Register

GPIEN = 9CH — Reset Value = 0000 0000B

Not Bit Addressable

	GPIEN7	GPIEN6	GPIEN5	GPIEN4	GPIEN3	GPIEN2	GPIEN1	GPIEN0
Bit	7	6	5	4	3	2	1	0

GPIEN.x 0 = interrupt for P1.x disabled

1 = interrupt for P1.x enabled

Table 15-4. GPIF – General-purpose Interrupt Flag Register

GPIF = 9DH — Reset Value = 0000 0000B

Not Bit Addressable

	GPIF7	GPIF6	GPIF5	GPIF4	GPIF3	GPIF2	GPIF1	GPIF0
Bit	7	6	5	4	3	2	1	0

GPIF.x 0 = interrupt on P1.x inactive

1 = interrupt on P1.x active. Must be cleared by software.

16. Serial Interface (UART)

The serial interface on the AT89LP3240/6440 implements a Universal Asynchronous Receiver/Transmitter (UART). The UART has the following features:

- Full-duplex Operation
- 8 or 9 Data Bits
- Framing Error Detection
- Multiprocessor Communication Mode with Automatic Address Recognition
- Baud Rate Generator Using Timer 1 or Timer 2
- Interrupt on Receive Buffer Full or Transmission Complete

The serial interface is full-duplex, which means it can transmit and receive simultaneously. It is also receive-buffered, which means it can begin receiving a second byte before a previously received byte has been read from the receive register. (However, if the first byte still has not been read when reception of the second byte is complete, one of the bytes will be lost.) The serial port receive and transmit registers are both accessed at the Special Function Register SBUF. Writing to SBUF loads the transmit register, and reading SBUF accesses a physically separate receive register. The serial port can operate in the following four modes.

- **Mode 0:** Serial data enters and exits through RXD. TXD outputs the shift clock. Eight data bits are transmitted/received, with the LSB first. The baud rate is programmable to 1/2 or 1/4 the oscillator frequency, or variable based on Time 1.
- **Mode 1:** 10 bits are transmitted (through TXD) or received (through RXD): a start bit (0), 8 data bits (LSB first), and a stop bit (1). On receive, the stop bit goes into RB8 in the Special Function Register SCON. The baud rate is variable based on Timer 1 or Timer 2.
- **Mode 2:** 11 bits are transmitted (through TXD) or received (through RXD): a start bit (0), 8 data bits (LSB first), a programmable 9th data bit, and a stop bit (1). On transmit, the 9th data bit (TB8 in SCON) can be assigned the value of “0” or “1”. For example, the parity bit (P, in the PSW) can be moved into TB8. On receive, the 9th data bit goes into RB8 in the Special Function Register SCON, while the stop bit is ignored. The baud rate is programmable to either 1/16 or 1/32 the oscillator frequency.
- **Mode 3:** 11 bits are transmitted (through TXD) or received (through RXD): a start bit (0), 8 data bits (LSB first), a programmable 9th data bit, and a stop bit (1). In fact, Mode 3 is the same as Mode 2 in all respects except the baud rate, which is variable based on Timer 1 or Timer 3 in Mode 3.

In all four modes, transmission is initiated by any instruction that uses SBUF as a destination register. Reception is initiated in Mode 0 by the condition RI = 0 and REN = 1. Reception is initiated in the other modes by the incoming start bit if REN = 1.

16.1 Multiprocessor Communications

Modes 2 and 3 have a special provision for multiprocessor communications. In these modes, 9 data bits are received, followed by a stop bit. The 9th bit goes into RB8. Then comes a stop bit. The port can be programmed such that when the stop bit is received, the serial port interrupt is activated only if RB8 = 1. This feature is enabled by setting bit SM2 in SCON.

The following example shows how to use the serial interrupt for multiprocessor communications. When the master processor must transmit a block of data to one of several slaves, it first sends out an address byte that identifies the target slave. An address byte differs from a data byte in that the 9th bit is “1” in an address byte and “0” in a data byte. With SM2 = 1, no slave is interrupted by a data byte. An address byte, however, interrupts all slaves. Each slave can examine the received byte and see if it is being addressed. The addressed slave clears its SM2

bit and prepares to receive the data bytes that follows. The slaves that are not addressed set their SM2 bits and ignore the data bytes. See “Automatic Address Recognition” on page 97.

The SM2 bit can be used to check the validity of the stop bit in Mode 1. In a Mode 1 reception, if SM2 = 1, the receive interrupt is not activated unless a valid stop bit is received.

Table 16-1. SCON – Serial Port Control Register

SCON Address = 98H — Reset Value = 0000 0000B

Bit Addressable

	SM0/FE	SM1	SM2	REN	TB8	RB8	T1	RI
Bit	7	6	5	4	3	2	1	0

(SMOD0 = 0/1)[1]

Symbol	Function
FE	Framing error bit. This bit is set by the receiver when an invalid stop bit is detected. The FE bit is not cleared by valid frames and must be cleared by software. The SMOD0 bit must be set to enable access to the FE bit. FE will be set regardless of the state of SMOD0.
SM0	Serial Port Mode Bit 0, (SMOD0 must = 0 to access bit SM0)
SM1	Serial Port Mode Bit 1 **SM0** / **SM1** / **Mode** / **Description** / **Baud Rate**[2] 0 / 0 / 0 / shift register / $f_{osc}/2$ or $f_{osc}/4$ or Timer 1 0 / 1 / 1 / 8-bit UART / variable (Timer 1 or Timer 2) 1 / 0 / 2 / 9-bit UART / $f_{osc}/32$ or $f_{osc}/16$ 1 / 1 / 3 / 9-bit UART / variable (Timer 1 or Timer 2)
SM2	Enables the Automatic Address Recognition feature in Modes 2 or 3. If SM2 = 1 then RI will not be set unless the received 9th data bit (RB8) is 1, indicating an address, and the received byte is a Given or Broadcast Address. In Mode 1, if SM2 = 1 then RI will not be activated unless a valid stop bit was received, and the received byte is a Given or Broadcast Address. In Mode 0, SM2 determines the idle state of the shift clock such that the clock is the inverse of SM2, i.e. when SM2 = 0 the clock idles high and when SM2 = 1 the clock idles low.
REN	Enables serial reception. Set by software to enable reception. Clear by software to disable reception.
TB8	The 9th data bit that will be transmitted in Modes 2 and 3. Set or clear by software as desired. In Mode 0, setting TB8 enables Timer 1 as the shift clock generator.
RB8	In Modes 2 and 3, the 9th data bit that was received. In Mode 1, if SM2 = 0, RB8 is the stop bit that was received. In Mode 0, RB8 is not used.
TI	Transmit interrupt flag. Set by hardware at the end of the 8th bit time in Mode 0, or at the beginning of the stop bit in the other modes, in any serial transmission. Must be cleared by software.
RI	Receive interrupt flag. Set by hardware at the end of the 8th bit time in Mode 0, or halfway through the stop bit time in the other modes, in any serial reception (except see SM2). Must be cleared by software.

Notes: 1. SMOD0 is located at PCON.6.
2. f_{osc} = oscillator frequency. The baud rate depends on SMOD1 (PCON.7).

16.2 Baud Rates

The baud rate in Mode 0 depends on the value of the SMOD1 bit in Special Function Register PCON.7. If SMOD1 = 0 (the value on reset) and TB8 = 0, the baud rate is 1/4 of the oscillator frequency. If SMOD1 = 1 and TB8 = 0, the baud rate is 1/2 of the oscillator frequency, as shown in the following equation:

$$\underset{TB8 = 0}{\text{Mode 0 Baud Rate}} = \frac{2^{SMOD1}}{4} \times \text{Oscillator Frequency}$$

The baud rate in Mode 2 also depends on the value of the SMOD1 bit. If SMOD1 = 0, the baud rate is 1/32 of the oscillator frequency. If SMOD1 = 1, the baud rate is 1/16 of the oscillator frequency, as shown in the following equation:

$$\text{Mode 2 Baud Rate} = \frac{2^{SMOD1}}{32} \times \text{Oscillator Frequency}$$

16.2.1 Using Timer 1 to Generate Baud Rates

Setting TB8 = 1 in Mode 0 enables Timer 1 as the baud rate generator. When Timer 1 is the baud rate generator for Mode 0, the baud rates are determined by the Timer 1 overflow rate and the value of SMOD1 according to the following equation:

$$\underset{TB8 = 1}{\text{Mode 0 Baud Rate}} = \frac{2^{SMOD1}}{4} \times \text{(Timer 1 Overflow Rate)}$$

The Timer 1 overflow rate normally determines the baud rates in Modes 1 and 3. When Timer 1 is the baud rate generator, the baud rates are determined by the Timer 1 overflow rate and the value of SMOD1 according to the following equation:

$$\underset{\text{Baud Rate}}{\text{Modes 1, 3}} = \frac{2^{SMOD1}}{32} \times \text{(Timer 1 Overflow Rate)}$$

The Timer 1 interrupt should be disabled in this application. The Timer itself can be configured for either timer or counter operation in any of its 3 running modes. In the most typical applications, it is configured for timer operation in auto-reload mode (high nibble of TMOD = 0010B). In this case, the baud rate is given by the following formula:

$$\underset{\text{Baud Rate}}{\text{Modes 1, 3}} = \frac{2^{SMOD1}}{32} \times \frac{\text{Oscillator Frequency}}{[256 - (TH1)]} \times \frac{1}{TPS + 1}$$

Programmers can achieve very low baud rates with Timer 1 by configuring the Timer to run as a 16-bit auto-reload timer (high nibble of TMOD = 0001B). In this case, the baud rate is given by the following formula.

$$\underset{\text{Baud Rate}}{\text{Modes 1, 3}} = \frac{2^{SMOD1}}{32} \times \frac{\text{Oscillator Frequency}}{[65536 - (RH1,RL1)]} \times \frac{1}{TPS + 1}$$

Table 16-2 lists commonly used baud rates and how they can be obtained from Timer 1.

Table 16-2. Commonly Used Baud Rates Generated by Timer 1 (TPS = 0000B)

Baud Rate	f_{OSC} (MHz)	SMOD1	Timer 1		
			C/$\overline{T}$	Mode	Reload Value
Mode 0: 1 MHz	4	0	X	X	X
Mode 2: 750K	12	1	X	X	X
62.5K	12	1	0	2	F4H
38.4K	11.059	0	0	2	F7H
19.2K	11.059	1	0	2	DCH
9.6K	11.059	0	0	2	DCH
4.8K	11.059	0	0	2	B8H
2.4K	11.059	0	0	2	70H
1.2K	11.059	0	0	1	FEE0H
137.5	11.986	0	0	1	F55CH
110	6	0	0	1	F958H
110	12	0	0	1	F304H

16.2.2 Using Timer 2 to Generate Baud Rates

Timer 2 is selected as the baud rate generator by setting TCLK and/or RCLK in T2CON. Under these conditions, the baud rates for transmit and receive can be simultaneously different by using Timer 1 for transmit and Timer 2 for receive, or vice versa. The baud rate generator mode is similar to the auto-reload mode, in that a rollover causes the Timer 2 registers to be reloaded with the 16-bit value in registers RCAP2H and RCAP2L, which are preset by software. In this case, the baud rates in Modes 1 and 3 are determined by Timer 2's overflow rate according to the following equation:.

$$\begin{matrix}\text{Modes 1 and 3}\\ \text{Baud Rate}\end{matrix} = \frac{1}{16} \times \frac{\text{Oscillator Frequency}}{[65536 - (\text{RCAP2H,RCAP2L})]} \times \frac{1}{\text{TPS} + 1}$$

Table 16-3 lists commonly used baud rates and how they can be obtained from Timer 2.

Table 16-3. Commonly Used Baud Rates Generated by Timer 2 (TPS = 0000B)

Baud Rate	f_{OSC} (MHz)	Timer 2			
		CP/$\overline{RL2}$	C/$\overline{T2}$	TCLK or RCLK	Reload Value
62.5K	12	0	0	1	FFF4H
19.2K	11.059	0	0	1	FFDCH
9.6K	11.059	0	0	1	FFB8H
4.8K	11.059	0	0	1	FF70H
2.4K	11.059	0	0	1	FEE0H
1.2K	11.059	0	0	1	FDC0H
137.5	11.986	0	0	1	EAB8H
110	6	0	0	1	F2AFH
110	12	0	0	1	E55EH

16.3 More About Mode 0

In Mode 0, the UART is configured as a two wire half-duplex synchronous serial interface. Serial data enters and exits through RXD. TXD outputs the shift clock. Eight data bits are transmitted/received, with the LSB first. Figure 16-1 on page 90 shows a simplified functional diagram of the serial port in Mode 0 and associated timing. The baud rate is programmable to 1/2 or 1/4 the oscillator frequency by setting/clearing the SMOD1 bit. However, changing SMOD1 has an effect on the relationship between the clock and data as described below. The baud rate can also be generated by Timer 1 by setting TB8. Table 16-4 lists the baud rate options for Mode 0.

Table 16-4. Mode 0 Baud Rates

TB8	SMOD1	Baud Rate
0	0	$f_{SYS}/4$
0	1	$f_{SYS}/2$
1	0	(Timer 1 Overflow) / 4
1	1	(Timer 1 Overflow) / 2

Transmission is initiated by any instruction that uses SBUF as a destination register. The “write to SBUF” signal also loads a “1” into the 9th position of the transmit shift register and tells the TX Control Block to begin a transmission. The internal timing is such that one full bit slot may elapse between “write to SBUF” and activation of SEND.

SEND transfers the output of the shift register to the alternate output function line of P3.0, and also transfers Shift Clock to the alternate output function line of P3.1. As data bits shift out to the right, “0”s come in from the left. When the MSB of the data byte is at the output position of the shift register, the “1” that was initially loaded into the 9th position is just to the left of the MSB, and all positions to the left of that contain “0”s. This condition flags the TX Control block to do one last shift, then deactivate SEND and set TI.

Reception is initiated by the condition REN = 1 and R1 = 0. At the next clock cycle, the RX Control unit writes the bits 11111110 to the receive shift register and activates RECEIVE in the next clock phase. RECEIVE enables Shift Clock to the alternate output function line of P3.1. As data bits come in from the right, “1”s shift out to the left. When the “0” that was initially loaded into the right-most position arrives at the left-most position in the shift register, it flags the RX Control block to do one last shift and load SBUF. Then RECEIVE is cleared and RI is set.

The relationship between the shift clock and data is determined by the combination of the SM2 and SMOD1 bits as listed in Table 16-5 and shown in Figure 16-2. The SM2 bit determines the idle state of the clock when not currently transmitting/receiving. The SMOD1 bit determines if the output data is stable for both edges of the clock, or just one.

Table 16-5. Mode 0 Clock and Data Modes

SM2	SMOD1	Clock Idle	Data Changed	Data Sampled
0	0	High	While clock is high	Positive edge of clock
0	1	High	Negative edge of clock	Positive edge of clock
1	0	Low	While clock is low	Negative edge of clock
1	1	Low	Negative edge of clock	Positive edge of clock

Figure 16-1. Serial Port Mode 0

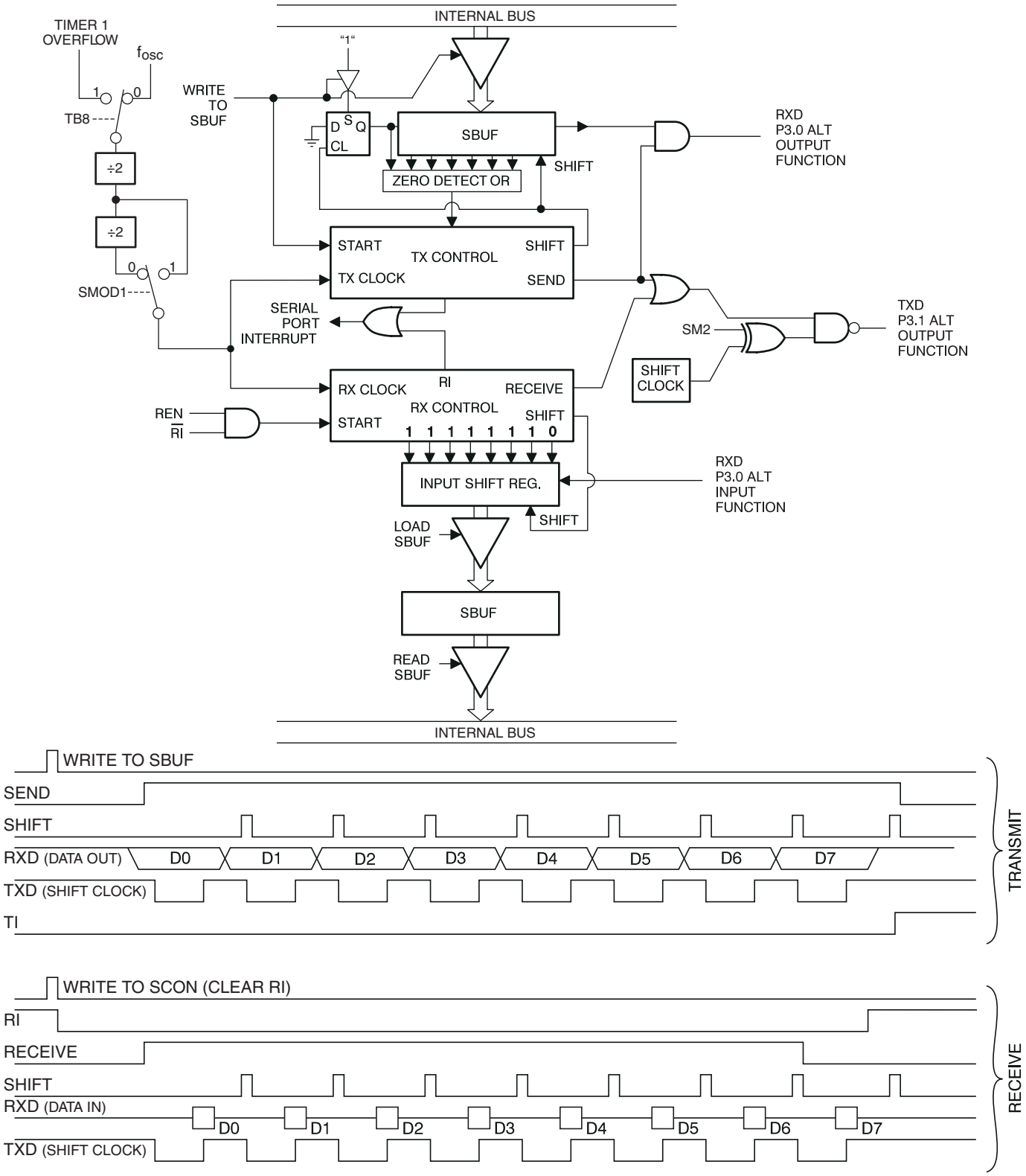

Figure 16-2. Mode 0 Waveforms

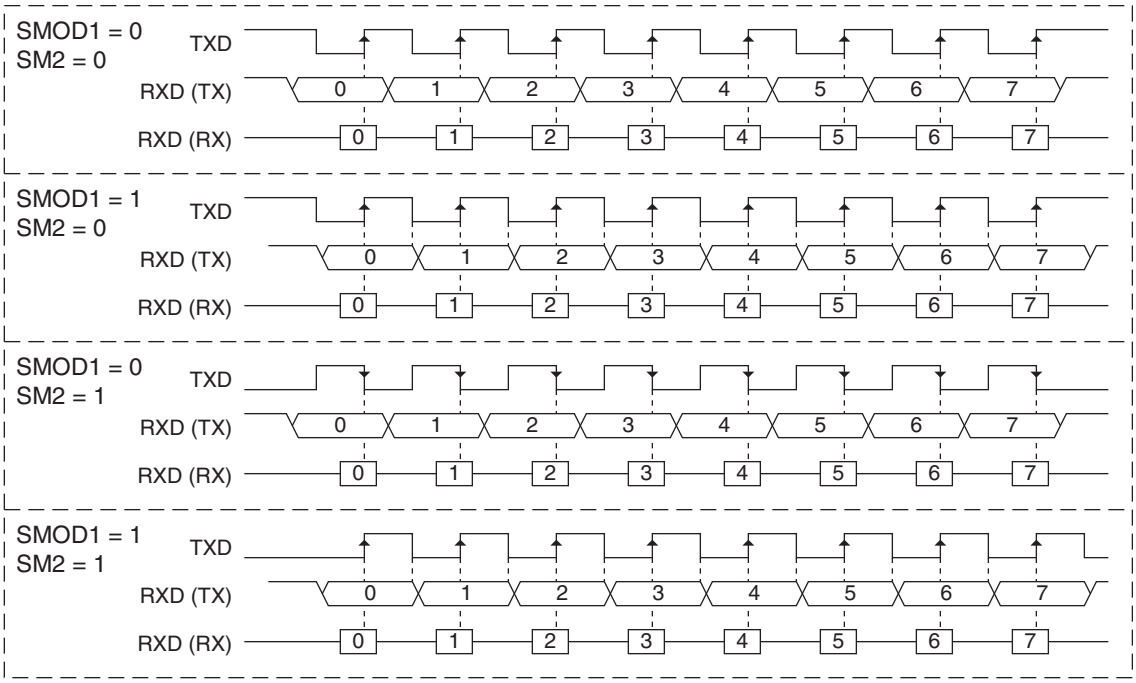

Mode 0 may be used as a hardware accelerator for software emulation of serial interfaces such as a half-duplex Serial Peripheral Interface (SPI) in mode (0,0) or (1,1) or a Two-Wire Interface (TWI) in master mode. An example of Mode 0 emulating a TWI master device is shown in Figure 16-3. In this example, the start, stop, and acknowledge are handled in software while the byte transmission is done in hardware. Falling/rising edges on TXD are created by setting/clearing SM2. Rising/falling edges on RXD are forced by setting/clearing the P3.0 register bit. SM2 and P3.0 must be 1 while the byte is being transferred.

Figure 16-3. UART Mode 0 TWI Emulation (SMOD1 = 1)

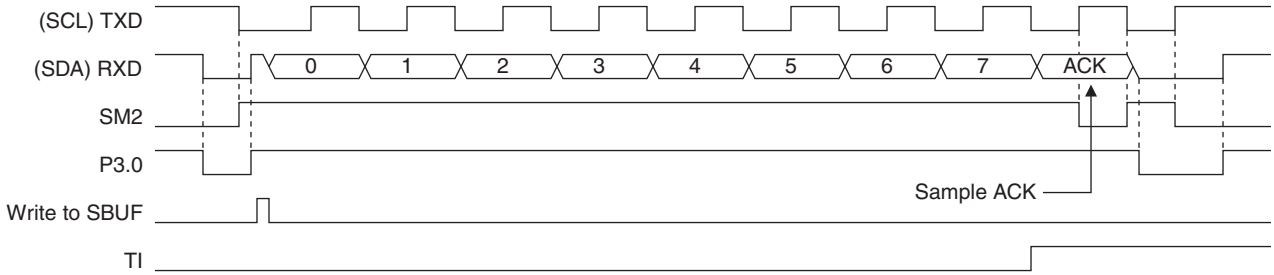

Mode 0 transfers data LSB first whereas SPI or TWI are generally MSB first. Emulation of these interfaces may require bit reversal of the transferred data bytes. The following code example reverses the bits in the accumulator:

```
EX:     MOV  R7, #8
REVRS:  RLC  A              ; C << msb(ACC)
        XCH  A, R6
        RRC  A              ; msb(ACC) >> B
        XCH  A, R6
        DJNZ R7, REVRS
```

16.4 More About Mode 1

Ten bits are transmitted (through TXD), or received (through RXD): a start bit (0), 8 data bits (LSB first), and a stop bit (1). On receive, the stop bit goes into RB8 in SCON. In the AT89LP3240/6440, the baud rate is determined either by the Timer 1 overflow rate, the TImer 2 overflow rate, or both. In this case one timer is for transmit and the other is for receive. Figure 16-4 shows a simplified functional diagram of the serial port in Mode 1 and associated timings for transmit and receive.

Transmission is initiated by any instruction that uses SBUF as a destination register. The “write to SBUF” signal also loads a “1” into the 9th bit position of the transmit shift register and flags the TX Control unit that a transmission is requested. Transmission actually commences at S1P1 of the machine cycle following the next rollover in the divide-by-16 counter. Thus, the bit times are synchronized to the divide-by-16 counter, not to the “write to SBUF” signal.

The transmission begins when $\overline{\text{SEND}}$ is activated, which puts the start bit at TXD. One bit time later, DATA is activated, which enables the output bit of the transmit shift register to TXD. The first shift pulse occurs one bit time after that.

As data bits shift out to the right, “0”s are clocked in from the left. When the MSB of the data byte is at the output position of the shift register, the “1” that was initially loaded into the 9th position is just to the left of the MSB, and all positions to the left of that contain “0”s. This condition flags the TX Control unit to do one last shift, then deactivate $\overline{\text{SEND}}$ and set TI. This occurs at the tenth divide-by-16 rollover after “write to SBUF.”

Reception is initiated by a 1-to-0 transition detected at RXD. For this purpose, RXD is sampled at a rate of 16 times the established baud rate. When a transition is detected, the divide-by-16 counter is immediately reset, and 1FFH is written into the input shift register. Resetting the divide-by-16 counter aligns its roll-overs with the boundaries of the incoming bit times.

The 16 states of the counter divide each bit time into 16ths. At the 7th, 8th, and 9th counter states of each bit time, the bit detector samples the value of RXD. The value accepted is the value that was seen in at least 2 of the 3 samples. This is done to reject noise. In order to reject false bits, if the value accepted during the first bit time is not 0, the receive circuits are reset and the unit continues looking for another 1-to-0 transition. If the start bit is valid, it is shifted into the input shift register, and reception of the rest of the frame proceeds.

As data bits come in from the right, “1”s shift out to the left. When the start bit arrives at the left-most position in the shift register, (which is a 9-bit register in Mode 1), it flags the RX Control block to do one last shift, load SBUF and RB8, and set RI. The signal to load SBUF and RB8 and to set RI is generated if, and only if, the following conditions are met at the time the final shift pulse is generated.

RI = 0 and

Either SM2 = 0, or the received stop bit = 1

If either of these two conditions is not met, the received frame is irretrievably lost. If both conditions are met, the stop bit goes into RB8, the 8 data bits go into SBUF, and RI is activated. At this time, whether or not the above conditions are met, the unit continues looking for a 1-to-0 transition in RXD.

Figure 16-4. Serial Port Mode 1

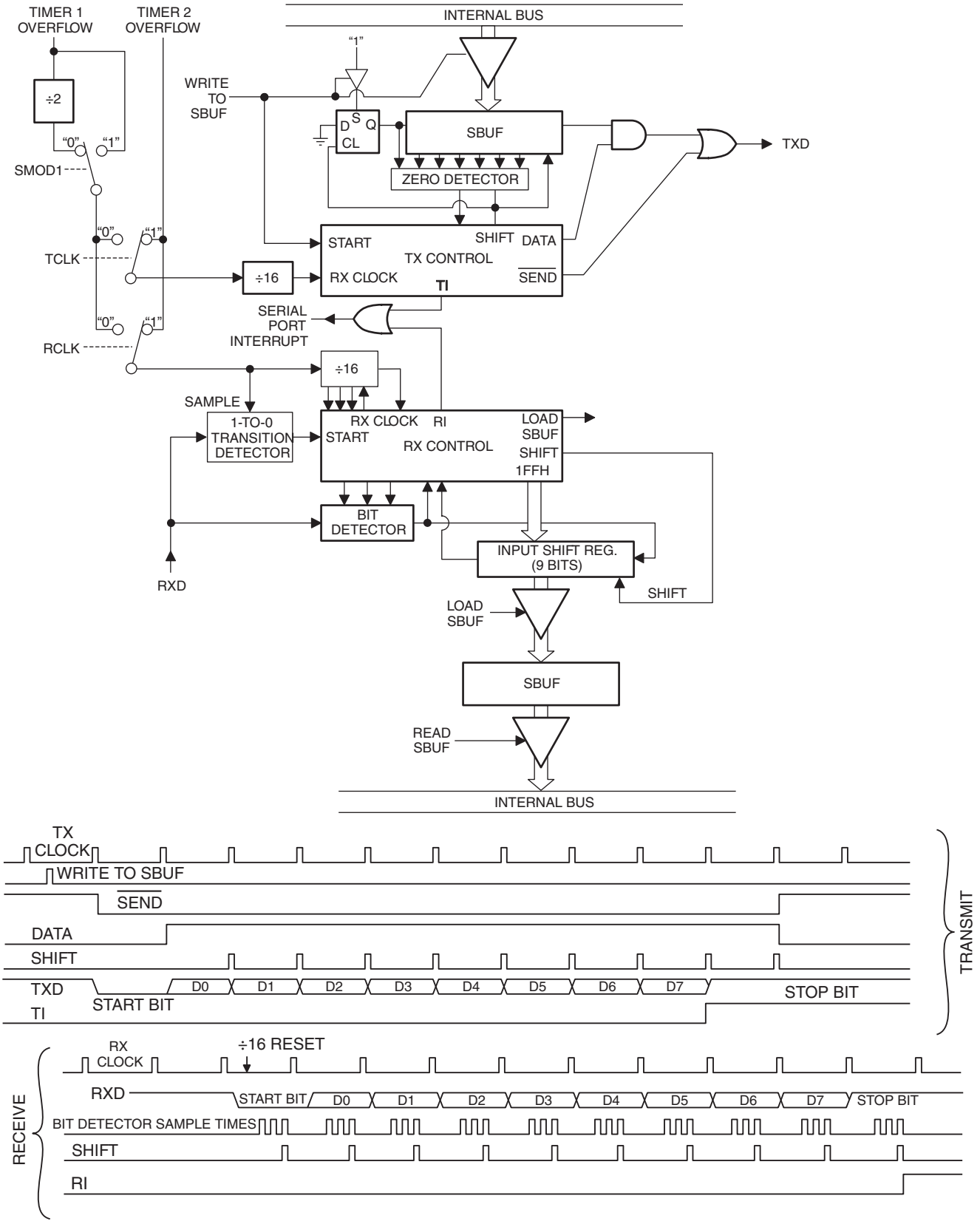

16.5 More About Modes 2 and 3

Eleven bits are transmitted (through TXD), or received (through RXD): a start bit (0), 8 data bits (LSB first), a programmable 9th data bit, and a stop bit (1). On transmit, the 9th data bit (TB8) can be assigned the value of “0” or “1”. On receive, the 9th data bit goes into RB8 in SCON. The baud rate is programmable to either 1/16 or 1/32 of the oscillator frequency in Mode 2. Mode 3 may have a variable baud rate generated from either Timer 1 or Timer 2, depending on the state of RCLK and TCLK.

Figures 16-5 and 16-6 show a functional diagram of the serial port in Modes 2 and 3. The receive portion is exactly the same as in Mode 1. The transmit portion differs from Mode 1 only in the 9th bit of the transmit shift register.

Transmission is initiated by any instruction that uses SBUF as a destination register. The “write to SBUF” signal also loads TB8 into the 9th bit position of the transmit shift register and flags the TX Control unit that a transmission is requested. Transmission commences at S1P1 of the machine cycle following the next rollover in the divide-by-16 counter. Thus, the bit times are synchronized to the divide-by-16 counter, not to the “write to SBUF” signal.

The transmission begins when $\overline{\text{SEND}}$ is activated, which puts the start bit at TXD. One bit time later, DATA is activated, which enables the output bit of the transmit shift register to TXD. The first shift pulse occurs one bit time after that. The first shift clocks a “1” (the stop bit) into the 9th bit position of the shift register. Thereafter, only “0”s are clocked in. Thus, as data bits shift out to the right, “0”s are clocked in from the left. When TB8 is at the output position of the shift register, then the stop bit is just to the left of TB8, and all positions to the left of that contain “0”s. This condition flags the TX Control unit to do one last shift, then deactivate SEND and set TI. This occurs at the 11th divide-by-16 rollover after “write to SBUF.”

Reception is initiated by a 1-to-0 transition detected at RXD. For this purpose, RXD is sampled at a rate of 16 times the established baud rate. When a transition is detected, the divide-by-16 counter is immediately reset, and 1FFH is written to the input shift register.

At the 7th, 8th and 9th counter states of each bit time, the bit detector samples the value of RXD. The value accepted is the value that was seen in at least 2 of the 3 samples. If the value accepted during the first bit time is not 0, the receive circuits are reset and the unit continues looking for another 1-to-0 transition. If the start bit proves valid, it is shifted into the input shift register, and reception of the rest of the frame proceeds.

As data bits come in from the right, “1”s shift out to the left. When the start bit arrives at the leftmost position in the shift register (which in Modes 2 and 3 is a 9-bit register), it flags the RX Control block to do one last shift, load SBUF and RB8, and set RI. The signal to load SBUF and RB8 and to set RI is generated if, and only if, the following conditions are met at the time the final shift pulse is generated:

RI = 0, and

Either SM2 = 0 or the received 9th data bit = 1

If either of these conditions is not met, the received frame is irretrievably lost, and RI is not set. If both conditions are met, the received 9th data bit goes into RB8, and the first 8 data bits go into SBUF. One bit time later, whether the above conditions were met or not, the unit continues looking for a 1-to-0 transition at the RXD input.

Note that the value of the received stop bit is irrelevant to SBUF, RB8, or RI.

Figure 16-5. Serial Port Mode 2

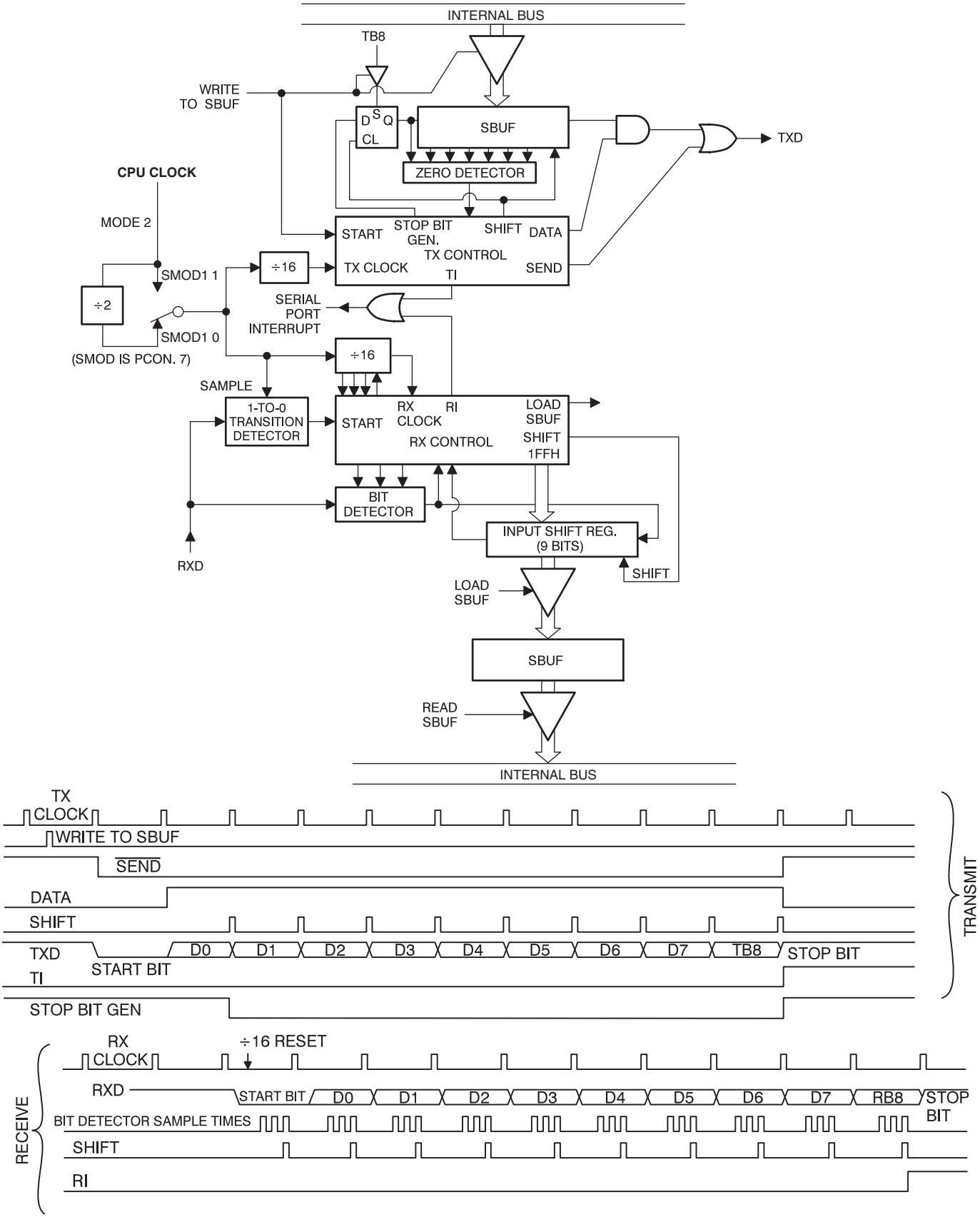

Figure 16-6. Serial Port Mode 3

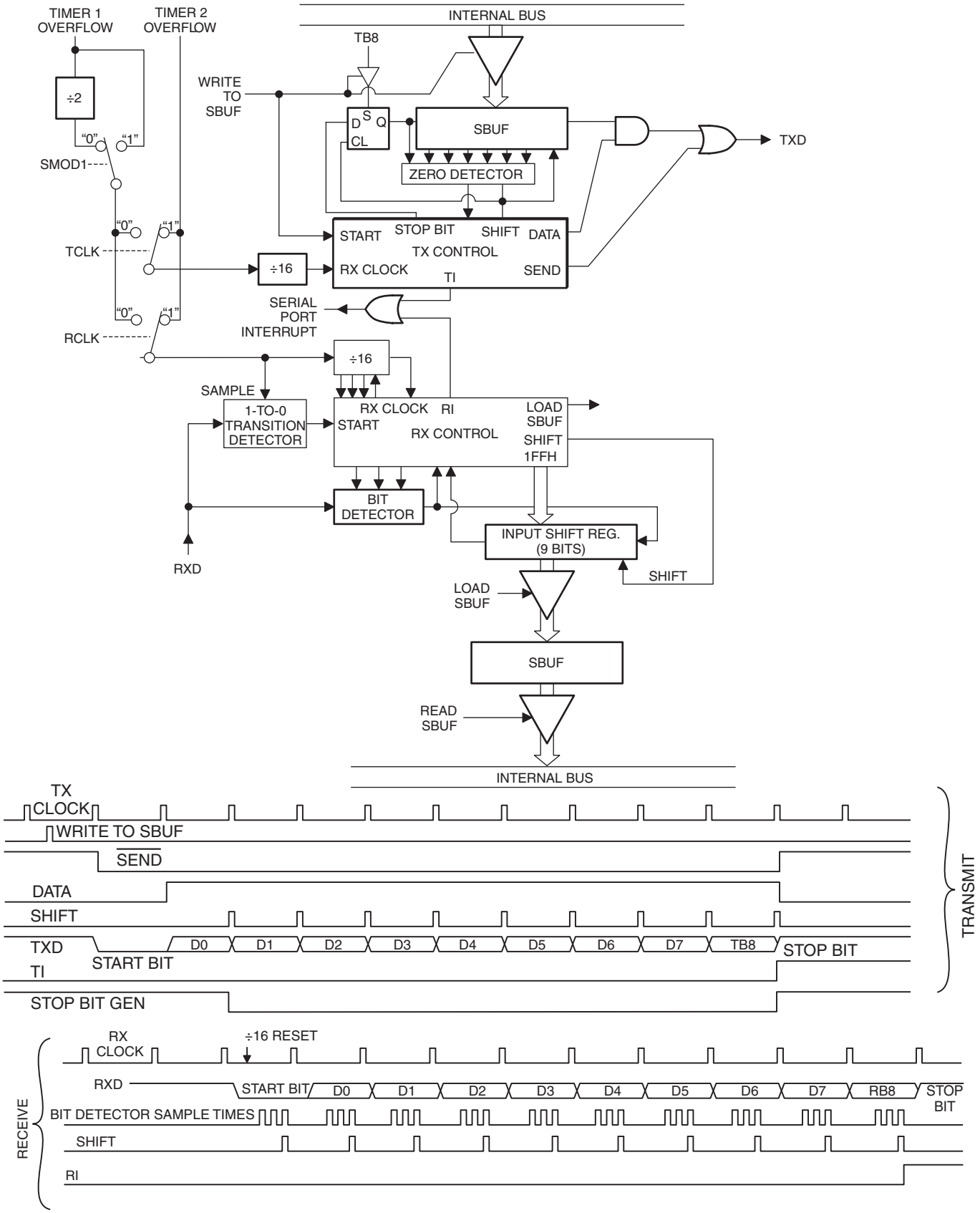

16.6 Framing Error Detection

In addition to all of its usual modes, the UART can perform framing error detection by looking for missing stop bits, and automatic address recognition. When used for framing error detect, the UART looks for missing stop bits in the communication. A missing bit will set the FE bit in the SCON register. The FE bit shares the SCON.7 bit with SM0 and the function of SCON.7 is determined by PCON.6 (SMOD0). If SMOD0 is set then SCON.7 functions as FE. SCON.7 functions as SM0 when SMOD0 is cleared. When used as FE, SCON.7 can only be cleared by software. The FE bit will be set by a framing error regardless of the state of SMOD0.

16.7 Automatic Address Recognition

Automatic Address Recognition is a feature which allows the UART to recognize certain addresses in the serial bit stream by using hardware to make the comparisons. This feature saves a great deal of software overhead by eliminating the need for the software to examine every serial address which passes by the serial port. This feature is enabled by setting the SM2 bit in SCON for Modes 1, 2 or 3. In the 9-bit UART modes, Mode 2 and Mode 3, the Receive Interrupt flag (RI) will be automatically set when the received byte contains either the “Given” address or the “Broadcast” address. The 9-bit mode requires that the 9th information bit be a “1” to indicate that the received information is an address and not data.

In Mode 1 (8-bit) the RI flag will be set if SM2 is enabled and the information received has a valid stop bit following the 8th address bits and the information is either a Given or Broadcast address.

Automatic Address Recognition is not available during Mode 0.

Using the Automatic Address Recognition feature allows a master to selectively communicate with one or more slaves by invoking the given slave address or addresses. All of the slaves may be contacted by using the Broadcast address. Two special Function Registers are used to define the slave’s address, SADDR, and the address mask, SADEN. SADEN is used to define which bits in the SADDR are to be used and which bits are “don’t care”. The SADEN mask can be logically ANDed with the SADDR to create the “Given” address which the master will use for addressing each of the slaves. Use of the Given address allows multiple slaves to be recognized while excluding others. The following examples show the versatility of this scheme:

Slave 0	SADDR = 1100 0000
	SADEN = 1111 1101
	Given = 1100 00X0
Slave 1	SADDR = 1100 0000
	SADEN = 1111 1110
	Given = 1100 000X

In the previous example, SADDR is the same and the SADEN data is used to differentiate between the two slaves. Slave 0 requires a “0” in bit 0 and it ignores bit 1. Slave 1 requires a “0” in bit 1 and bit 0 is ignored. A unique address for slave 0 would be 1100 0010 since slave 1 requires a “0” in bit 1. A unique address for slave 1 would be 1100 0001 since a “1” in bit 0 will exclude slave 0. Both slaves can be selected at the same time by an address which has bit 0 = 0 (for slave 0) and bit 1 = 0 (for slave 1). Thus, both could be addressed with 1100 0000.

In a more complex system, the following could be used to select slaves 1 and 2 while excluding slave 0:

Slave 0	SADDR = 1100 0000 SADEN = 1111 1001 Given = 1100 0XX0
Slave 1	SADDR = 1110 0000 SADEN = 1111 1010 Given = 1110 0X0X
Slave 2	SADDR = 1110 0000 SADEN = 1111 1100 Given = 1110 00XX

In the above example, the differentiation among the 3 slaves is in the lower 3 address bits. Slave 0 requires that bit 0 = 0 and it can be uniquely addressed by 1110 0110. Slave 1 requires that bit 1 = 0 and it can be uniquely addressed by 1110 and 0101. Slave 2 requires that bit 2 = 0 and its unique address is 1110 0011. To select Slaves 0 and 1 and exclude Slave 2, use address 1110 0100, since it is necessary to make bit 2 = 1 to exclude slave 2.

The Broadcast Address for each slave is created by taking the logic OR of SADDR and SADEN. Zeros in this result are trended as don't cares. In most cases, interpreting the don't cares as ones, the broadcast address will be FF hexadecimal.

Upon reset SADDR (SFR address 0A9H) and SADEN (SFR address 0B9H) are loaded with "0"s. This produces a given address of all "don't cares" as well as a Broadcast address of all "don't cares". This effectively disables the Automatic Addressing mode and allows the microcontroller to use standard 80C51-type UART drivers which do not make use of this feature.

17. Enhanced Serial Peripheral Interface

The Serial Peripheral Interface (SPI) allows high-speed synchronous data transfer between the AT89LP3240/6440 and peripheral devices or between multiple AT89LP3240/6440 devices, including multiple masters and slaves on a single bus. The SPI includes the following features:

- Full-duplex, 3-wire or 4-wire Synchronous Data Transfer
- Master or Slave Operation
- Maximum Bit Frequency = $f_{OSC}/4$
- LSB First or MSB First Data Transfer
- Four Programmable Bit Rates or Timer 1-based Baud Generation (Master Mode)
- End of Transmission Interrupt Flag
- Write Collision Flag Protection
- Double-buffered Receive and Transmit
- Transmit Buffer Empty Interrupt Flag
- Mode Fault (Master Collision) Detection and Interrupt
- Wake up from Idle Mode

A block diagram of the SPI is shown below in Figure 17-1.

Figure 17-1. SPI Block Diagram

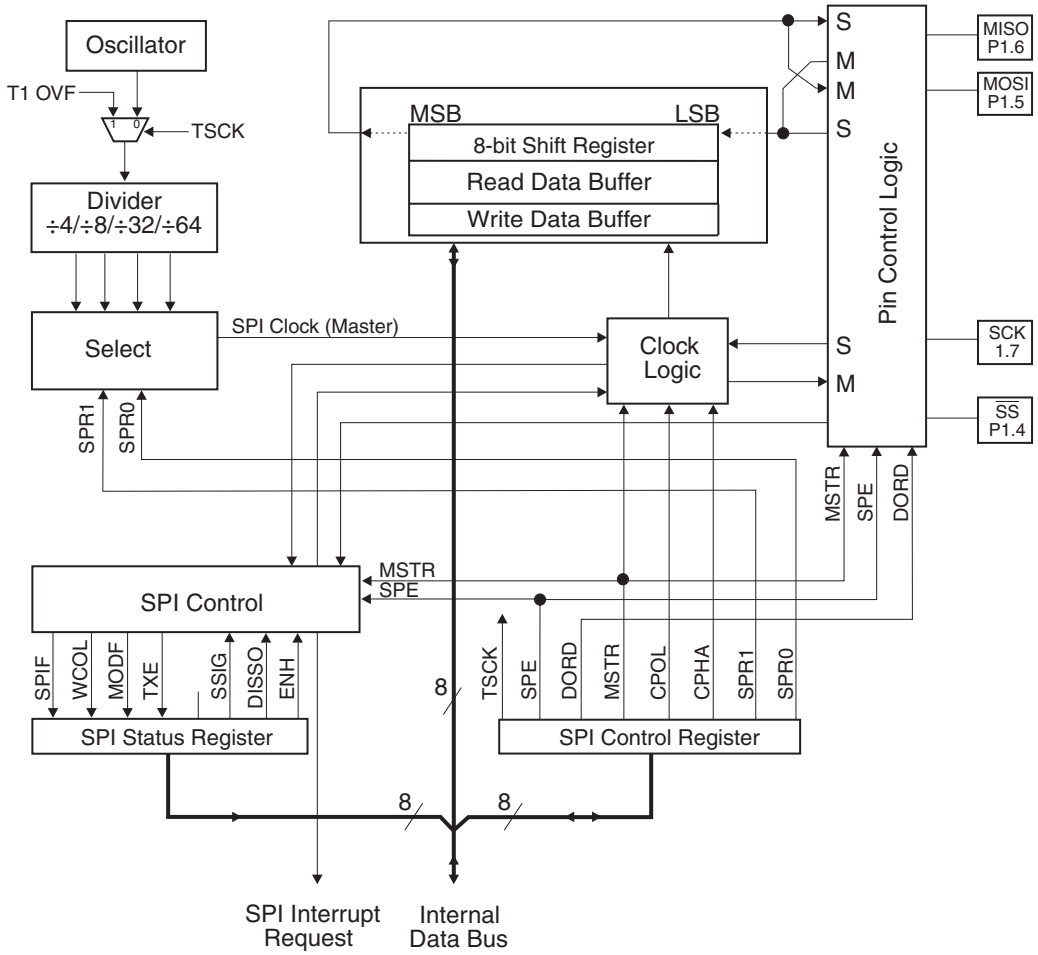

The interconnection between master and slave CPUs with SPI is shown in Figure 17-2. The four pins in the interface are Master-In/Slave-Out (MISO), Master-Out/Slave-In (MOSI), Shift Clock (SCK), and Slave Select ($\overline{SS}$). The SCK pin is the clock output in master mode, but is the clock input in slave mode. The MSTR bit in SPCR determines the directions of MISO and MOSI. Also notice that MOSI connects to MOSI and MISO to MISO. By default $\overline{SS}$/P1.4 is an input to both master and slave devices.

In slave mode, $\overline{SS}$ must be driven low to select an individual device as a slave. When $\overline{SS}$ is held low, the SPI is activated, and MISO becomes an output if configured so by the user. All other pins are inputs. When $\overline{SS}$ is driven high, all pins are inputs, and the SPI is passive, which means that it will not receive incoming data. Note that the SPI logic will be reset once the $\overline{SS}$ pin is driven high. The $\overline{SS}$ pin is useful for packet/byte synchronization to keep the slave bit counter synchronous with the master clock generator. When the $\overline{SS}$ pin is driven high, the SPI slave will immediately reset the send and receive logic, and drop any partially received data in the Shift Register.The slave may ignore $\overline{SS}$ by setting its SSIG bit in SPSR. When SSIG = 1, the slave is always enabled and operates in 3-wire mode. However, the slave output on MISO may still be disabled by setting DISSO = 1.

The In-System Programming (ISP) interface also uses the SPI pins. Although the ISP protocol is SPI-based, the $\overline{SS}$ pin has special meaning and must be driven by the master as a frame delimiter. $\overline{SS}$ cannot be tied to ground for ISP to function correctly.

Figure 17-2. SPI Master-Slave Interconnection

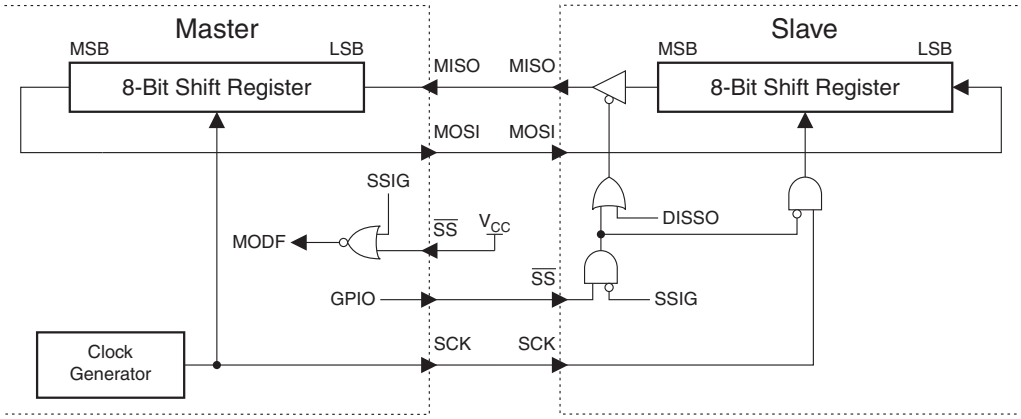

When the SPI is configured as a Master (MSTR in SPCR is set), the operation of the $\overline{SS}$ pin depends on the setting of the Slave Select Ignore bit, SSIG. If SSIG = 1, the $\overline{SS}$ pin is a general purpose output pin which does not affect the SPI system. Typically, the pin will be driving the $\overline{SS}$ pin of an SPI Slave. If SSIG = 0, $\overline{SS}$ must be held high to ensure Master SPI operation. If the $\overline{SS}$ pin is driven low by peripheral circuitry when the SPI is configured as a Master with SSIG = 0, the SPI system interprets this as another master selecting the SPI as a slave and starting to send data to it. To avoid bus contention, the SPI system takes the following actions:

1. The MSTR bit in SPCR is cleared and the SPI system becomes a Slave. As a result of the SPI becoming a Slave, the MOSI and SCK pins become inputs.
2. The MODF Flag in SPSR is set, and if the SPI interrupt is enabled, the interrupt routine will be executed.

Thus, when interrupt-driven SPI transmission is used in Master mode, and there exists a possibility that $\overline{SS}$ may be driven low, the interrupt should always check that the MSTR bit is still set. If the MSTR bit has been cleared by a slave select, it must be set by the user to re-enable SPI Master mode.

17.1 Master Operation

An SPI master device initiates all data transfers on the SPI bus. The AT89LP3240/6440 is configured for master operation by setting MSTR = 1 in SPCR. Writing to the SPI data register (SPDR) while in master mode loads the transmit buffer. If the SPI shift register is empty, the byte in the transmit buffer is moved to the shift register; the transmit buffer empty flag, TXE, is set; and a transmission begins. The transfer may start after an initial delay, while the clock generator waits for the next full bit slot of the specified baud rate. The master shifts the data out serially on the MOSI line while providing the serial shift clock on SCK. When the transfer finishes, the SPIF flag is set to “1” and an interrupt request is generated, if enabled. The data received from the addressed SPI slave device is also transferred from the shift register to the receive buffer. Therefore, the SPIF bit flags both the transmit-complete and receive-data-ready conditions. The received data is accessed by reading SPDR.

While the TXE flag is set, the transmit buffer is empty. TXE can be cleared by software or by writing to SPDR. Writing to SPDR will clear TXE and load the transmit buffer. The user may load the buffer while the shift register is busy, i.e. before the current transfer completes. When the current transfer completes, the queued byte in the transmit buffer is moved to the shift register and the next transfer commences. TXE will generate an interrupt if the SPI interrupt is enabled

and if the ENH bit in SPSR is set. For multi-byte transfers, TXE may be used to remove any dead time between byte transmissions.

The SPI master can operate in two modes: multi-master mode and single-master mode. By default, multi-master mode is active when SSIG = 0. In this mode, the $\overline{SS}$ input is used to disable a master device when another master is accessing the bus. When $\overline{SS}$ is driven low, the master device becomes a slave by clearing its MSTR bit and a Mode Fault is generated by setting the MODF bit in SPSR. MODF will generate an interrupt if enabled. The MSTR bit must be set in software before the device may become a master again. Single-master mode is enabled by setting SSIG = 1. In this mode $\overline{SS}$ is ignored and the master is always active. $\overline{SS}$ may be used as a general purpose I/O in this mode.

17.2 Slave Operation

When the AT89LP3240/6440 is not configured for master operation, MSTR = 0, it will operate as an SPI slave. In slave mode, bytes are shifted in through MOSI and out through MISO by a master device controlling the serial clock on SCK. When a byte has been transferred, the SPIF flag is set to “1” and an interrupt request is generated, if enabled. The data received from the addressed master device is also transferred from the shift register to the receive buffer. The received data is accessed by reading SPDR. A slave device cannot initiate transfers. Data to be transferred to the master device must be preloaded by writing to SPDR. Writes to SPDR are double-buffered. The transmit buffer is loaded first and if the shift register is empty, the contents of the buffer will be transferred to the shift register.

While the TXE flag is set, the transmit buffer is empty. TXE can be cleared by software or by writing to SPDR. Writing to SPDR will clear TXE and load the transmit buffer. The user may load the buffer while the shift register is busy, i.e. before the current transfer completes. When the current transfer completes, the queued byte in the transmit buffer is moved to the shift register and waits for the master to initiate another transfer. TXE will generate an interrupt if the SPI interrupt is enabled and if the ENH bit in SPSR is set.

The SPI slave can operate in two modes: 4-wire mode and 3-wire mode. By default, 4-wire mode is active when SSIG = 0. In this mode, the $\overline{SS}$ input is used to enable/disable the slave device when addressed by a master. When $\overline{SS}$ is driven low, the slave device is enabled and will shift out data on MISO in response to the serial clock on SCK. While $\overline{SS}$ is high, the SPI slave will remain sleeping with MISO inactive. Three-wire mode is enabled by setting SSIG = 1. In this mode $\overline{SS}$ is ignored and the slave is always active. $\overline{SS}$ may be used as a general purpose I/O in this mode.

The Disable Slave Output bit, DISSO in SPSR, may be used to disable the MISO line of a slave device. DISSO can allow several slave devices to share MISO while operating in 3-wire mode. In this case some protocol other than $\overline{SS}$ may be used to determine which slave is enabled.

17.3 Pin Configuration

When the SPI is enabled (SPE = 1), the data direction of the MOSI, MISO, SCK, and SS pins is automatically overridden according to the MSTR bit as shown in Table 17-1. The user need not reconfigure the pins when switching from master to slave or vice-versa. For more details on port configuration, refer to “Port Configuration” on page 45.

Table 17-1. SPI Pin Configuration and Behavior when SPE = 1

Pin	Mode	Master (MSTR = 1)	Slave (MSTR = 0)
SCK	Quasi-bidirectional	Output	Input (Internal Pull-up)
	Push-Pull Output	Output	Input (Tristate)
	Input-Only	No output (Tristated)	Input (Tristate)
	Open-Drain Output	Output	Input (External Pull-up)
MOSI	Quasi-bidirectional	Output(1)	Input (Internal Pull-up)
	Push-Pull Output	Output(2)	Input (Tristate)
	Input-Only	No output (Tristated)	Input (Tristate)
	Open-Drain Output	Output(1)	Input (External Pull-up)
MISO	Quasi-bidirectional	Input (Internal Pull-up)	Output ($\overline{SS}$ = 0) Internal Pull-up ($\overline{SS}$ = 1 or DISSO = 1)
	Push-Pull Output	Input (Tristate)	Output ($\overline{SS}$ = 0) Tristated ($\overline{SS}$ = 1 or DISSO = 1)
	Input-Only	Input (Tristate)	No output (Tristated)
	Open-Drain Output	Input (External Pull-up)	Output ($\overline{SS}$ = 0) External Pull-up ($\overline{SS}$ = 1 or DISSO = 1)

Notes: 1. In these modes MOSI is active only during transfers. MOSI will be pulled high between transfers to allow other masters to control the line.

2. In Push-Pull mode MOSI is active only during transfers, otherwise it is tristated to prevent line contention. A weak external pull-up may be required to prevent MOSI from floating.

Table 17-2. SPCR – SPI Control Register

SPCR Address = E9H — Reset Value = 0000 0000B

Not Bit Addressable

	TSCK	SPE	DORD	MSTR	CPOL	CPHA	SPR1	SPR0
Bit	7	6	5	4	3	2	1	0

Symbol	Function
TSCK	SCK Clock Mode. When TSCK = 0, the SCK baud rate is based on the system clock, divided by the SPR_{1-0} ratio.When TSCK = 1, the SCK baud rate is based on the Timer 1 overflow rate, divided by the SPR_{1-0} ratio.
SPE	SPI enable. SPI = 1 enables the SPI channel and connects $\overline{SS}$, MOSI, MISO and SCK to pins P1.4, P1.5, P1.6, and P1.7. SPI = 0 disables the SPI channel.
DORD	Data order. DORD = 1 selects LSB first data transmission. DORD = 0 selects MSB first data transmission.
MSTR	Master/slave select. MSTR = 1 selects Master SPI mode. MSTR = 0 selects slave SPI mode.
CPOL	Clock polarity. When CPOL = 1, SCK is high when idle. When CPOL = 0, SCK of the master device is low when not transmitting. Please refer to figure on SPI clock phase and polarity control.
CPHA	Clock phase. The CPHA bit together with the CPOL bit controls the clock and data relationship between master and slave. Please refer to figure on SPI clock phase and polarity control.

Symbol	Function
SPR0 SPR1	SPI clock rate select. These two bits control the SCK rate of the device configured as master. SPR1 and SPR0 have no effect on the slave. The relationship between SCK and the oscillator frequency, $F_{OSC.}$, is as follows: SPR1 SPR0 SCK (TSCK = 0) SCK (TSCK = 1) 0 0 $f_{OSC}/4$ $f_{T1OVF}/4$ 0 1 $f_{OSC}/8$ $f_{T1OVF}/8$ 1 0 $f_{OSC}/32$ $f_{T1OVF}/32$ 1 1 $f_{OSC}/64$ $f_{T1OVF}/64$

Notes: 1. Set up the clock mode before enabling the SPI: set all bits needed in SPCR except the SPE bit, then set SPE.
2. Enable the master SPI prior to the slave device.
3. Slave echoes master on the next Tx if not loaded with new data.

Table 17-3. SPDR – SPI Data Register

SPDR Address = EAH

Not Bit Addressable

Reset Value = 00H (after cold reset)
unchanged (after warm reset)

	SPD7	SPD6	SPD5	SPD4	SPD3	SPD2	SPD1	SPD0
Bit	7	6	5	4	3	2	1	0

Table 17-4. SPSR – SPI Status Register

SPSR Address = E8H

Reset Value = 0000 X000B

Not Bit Addressable

	SPIF	WCOL	MODF	TXE	–	SSIG	DISSO	ENH
Bit	7	6	5	4	3	2	1	0

Symbol	Function
SPIF	SPI Transfer Complete Interrupt Flag. When a serial transfer is complete, the SPIF bit is set by hardware and an interrupt is generated if ESP = 1. The SPIF bit may be cleared by software or by reading the SPI status register followed by reading/writing the SPI data register.
WCOL	Write Collision Flag. The WCOL bit is set by hardware if SPDR is written while the transmit buffer is full. The ongoing transfer is not affected. WCOL may be cleared by software or by reading the SPI status register followed by reading/writing the SPI data register.
MODF	Mode Fault Flag. MODF is set by hardware when a master mode collision is detected (MSTR = 1, SSIG = 0 and $\overline{SS}$ = 0) and an interrupt is generated if ESP = 1. MODF must be cleared by software.
TXE	Transmit Buffer Empty Flag. Set by hardware when the transmit buffer is loaded into the shift register, allowing a new byte to be loaded. TXE must be cleared by software. When ENH = 1 and ESP = 1, TXE will generate an interrupt.

SSIG	Slave Select Ignore. If SSIG = 0, the SPI will only operate in slave mode if $\overline{SS}$ (P1.4) is pulled low. When SSIG = 1, the SPI ignores $\overline{SS}$ in slave mode and is active whenever SPE (SPCR.6) is set. When MSTR = 1 and SSIG = 0, $\overline{SS}$ is monitored for master mode collisions. Setting SSIG = 1 will ignore collisions on $\overline{SS}$. P1.4 may be used as a regular I/O pin when SSIG = 1.
DISSO	Disable slave output bit. When set, this bit causes the MISO pin to be tristated so that more than one slave device can share the same interface without multiple $\overline{SS}$ lines. Normally, the first byte in a transmission could be the slave address and only the selected slave should clear its DISSO bit.
ENH	TX Buffer Interrupt Enable. When ENH = 1, TXE will generate an SPI interrupt if ESP = 1. When ENH = 0, TXE does not generate an interrupt.

17.4 Serial Clock Timing

The CPHA, CPOL and SPR bits in SPCR control the shape and rate of SCK. The two SPR bits provide four possible clock rates when the SPI is in master mode. In slave mode, the SPI will operate at the rate of the incoming SCK as long as it does not exceed the maximum bit rate. There are also four possible combinations of SCK phase and polarity with respect to the serial data. CPHA and CPOL determine which format is used for transmission. The SPI data transfer formats are shown in Figures 17-3 and 17-4. To prevent glitches on SCK from disrupting the interface, CPHA, CPOL, and SPR should not be modified while the interface is enabled, and the master device should be enabled before the slave device(s).

Figure 17-3. SPI Transfer Format with CPHA = 0

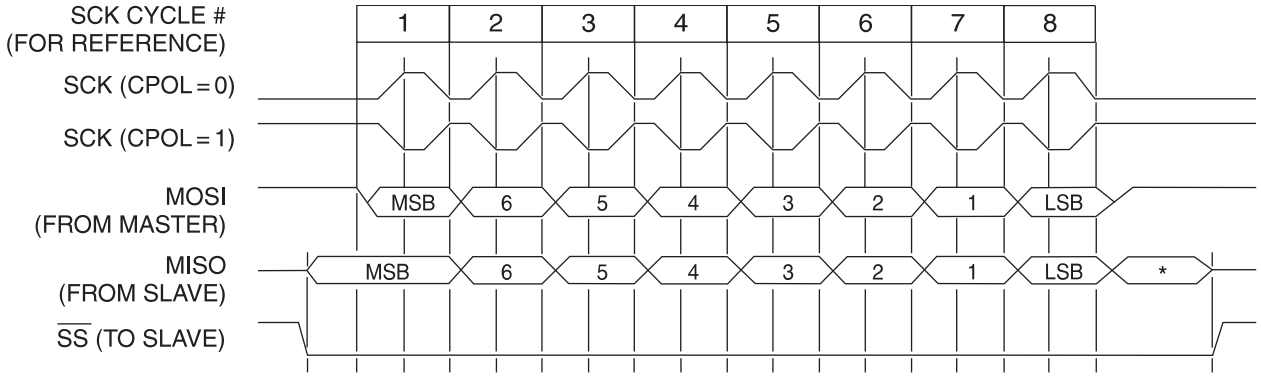

Note: *Not defined but normally MSB of character just received.

Figure 17-4. SPI Transfer Format with CPHA = 1

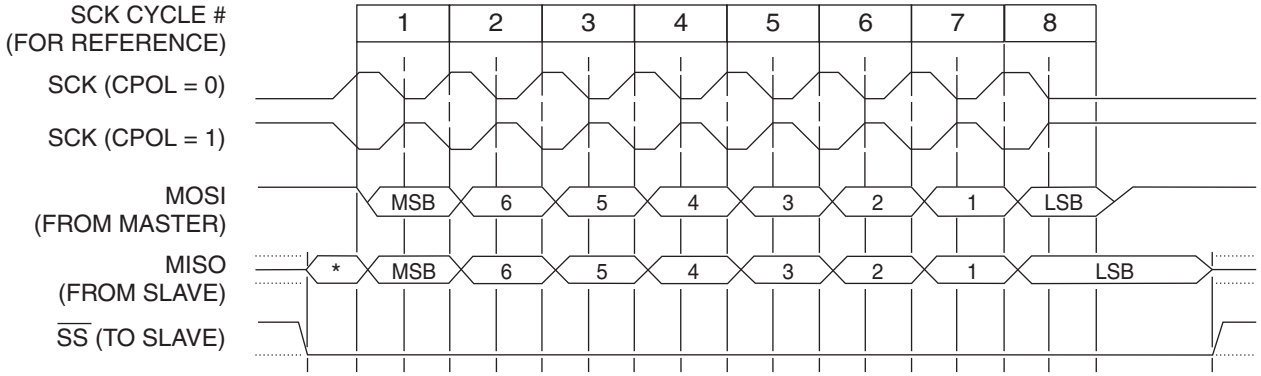

Note: *Not defined but normally LSB of previously transmitted character.

18. Two-Wire Serial Interface

The Two-Wire Interface (TWI) is a bi-directional 2-wire serial communication standard. It is designed primarily for simple but efficient integrated circuit (IC) control. The system is comprised of two lines, SCL (Serial Clock) and SDA (Serial Data) that carry information between the ICs connected to them. The only external hardware needed to implement the bus is a single pull-up resistor for each of the TWI bus lines. All devices connected to the bus have individual addresses, and mechanisms for resolving bus contention are inherent in the TWI protocol. The serial data transfer is limited to 400Kbit/s in standard mode. Various communication configurations can be designed using this bus. Figure 18-1 shows a typical 2-wire bus configuration. Any of the devices connected to the bus can be master or slave.

The Two-Wire Interface on the AT89LP provides the following features:

- Simple Yet Powerful and Flexible Communication Interface, only two Bus Lines Needed
- Both Master and Slave Operation Supported
- Device can Operate as Transmitter or Receiver
- 7-bit Address Space Allows up to 128 Different Slave Addresses
- Multi-master Arbitration Support
- Up to 400 kHz Data Transfer Speed
- Fully Programmable Slave Address with General Call Support

Figure 18-1. Two-Wire Bus Configuration

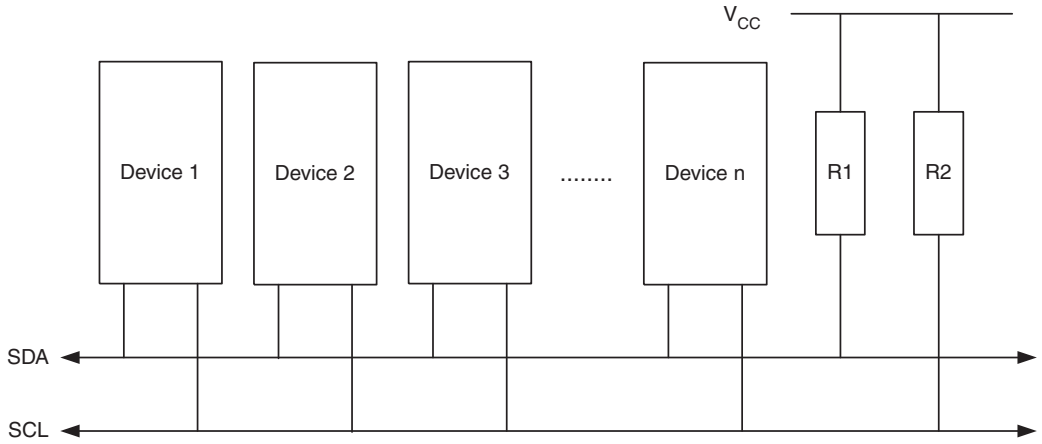

As depicted in Figure 18-1, both bus lines are connected to the positive supply voltage through pull-up resistors. The bus drivers of all TWI-compliant devices are open-drain or open-collector. This implements a wired-AND function which is essential to the operation of the interface. A low level on a TWI bus line is generated when one or more TWI devices output a zero. A high level is output when all TWI devices tristate their outputs, allowing the pull-up resistors to pull the line high. Note that all AT89LP devices connected to the TWI bus must be powered in order to allow any bus operation. The number of devices that can be connected to the bus is only limited by the bus capacitance limit of 400 pF and the 7-bit slave address space.

18.1 Data Transfer and Frame Format

18.1.1 Transferring Bits

Each data bit transferred on the TWI bus is accompanied by a pulse on the clock line. The level of the data line must be stable when the clock line is high. The only exception to this rule is for generating start and stop conditions.

Figure 18-2. Data Validity

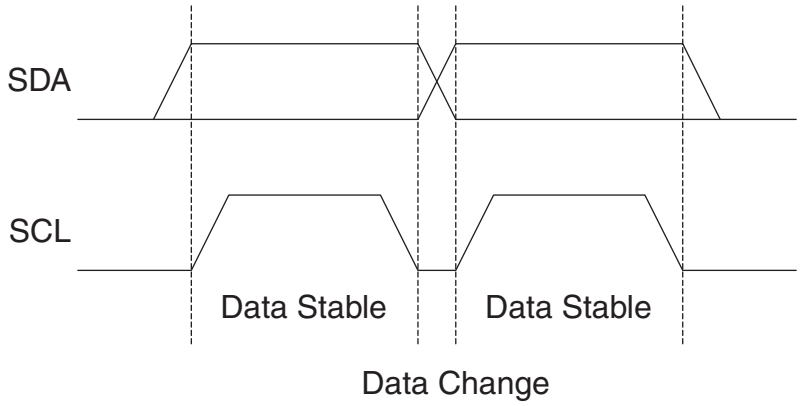

18.1.2 START and STOP Conditions

The Master initiates and terminates a data transmission. The transmission is initiated when the Master issues a START condition on the bus, and it is terminated when the Master issues a STOP condition. Between a START and a STOP condition, the bus is considered busy, and no other Master should try to seize control of the bus. A special case occurs when a new START condition is issued between a START and STOP condition. This is referred to as a REPEATED START condition, and is used when the Master wishes to initiate a new transfer without relinquishing control of the bus. After a REPEATED START, the bus is considered busy until the next STOP. This is identical to the START behavior, and therefore START is used to describe both START and REPEATED START for the remainder of this data sheet, unless otherwise noted. As depicted below, START and STOP conditions are signalled by changing the level of the SDA line when the SCL line is high.

Figure 18-3. START, REPEATED START, and STOP Conditions

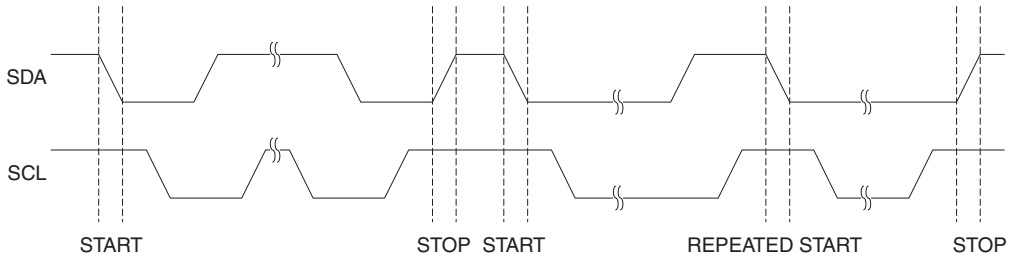

18.1.3 Address Packet Format

All address packets transmitted on the TWI bus are nine bits long, consisting of seven address bits, one READ/$\overline{\text{WRITE}}$ control bit and an acknowledge bit. If the READ/$\overline{\text{WRITE}}$ bit is set, a read operation is to be performed, otherwise a write operation should be performed. When a slave recognizes that it is being addressed, it should acknowledge by pulling SDA low in the ninth SCL (ACK) cycle. If the addressed Slave is busy, or for some other reason can not service the Mas-

ter's request, the SDA line should be left high in the ACK clock cycle. The Master can then transmit a STOP condition, or a REPEATED START condition to initiate a new transmission. An address packet consisting of a slave address and a READ or a $\overline{\text{WRITE}}$ bit is called SLA+R or SLA+W, respectively.

The MSB of the address byte is transmitted first. Slave addresses can freely be allocated by the designer, but the address 0000 000 is reserved for a general call.

When a general call is issued, all slaves should respond by pulling the SDA line low in the ACK cycle. A general call is used when a Master wishes to transmit the same message to several slaves in the system. When the general call address followed by a write bit is transmitted on the bus, all slaves set up to acknowledge the general call will pull the SDA line low in the ACK cycle. The following data packets will then be received by all the slaves that acknowledged the general call. Note that transmitting the general call address followed by a Read bit is meaningless, as this would cause contention if several slaves started transmitting different data.

All addresses of the format 1111 xxx should be reserved for future purposes.

Figure 18-4. Address Packet Format

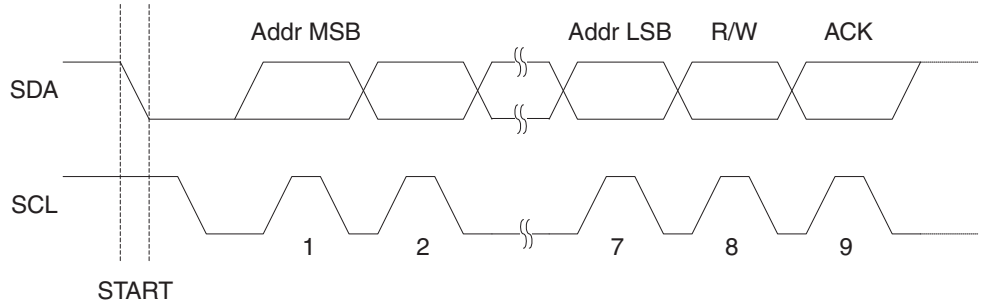

18.1.4 Data Packet Format

All data packets transmitted on the TWI bus are nine bits long, consisting of one data byte and an acknowledge bit. During a data transfer, the Master generates the clock and the START and STOP conditions, while the Receiver is responsible for acknowledging the reception. An Acknowledge (ACK) is signalled by the Receiver pulling the SDA line low during the ninth SCL cycle. If the Receiver leaves the SDA line high, a NACK is signalled. When the Receiver has received the last byte, or for some reason cannot receive any more bytes, it should inform the Transmitter by sending a NACK after the final byte. The MSB of the data byte is transmitted first.

Figure 18-5. Data Packet Format

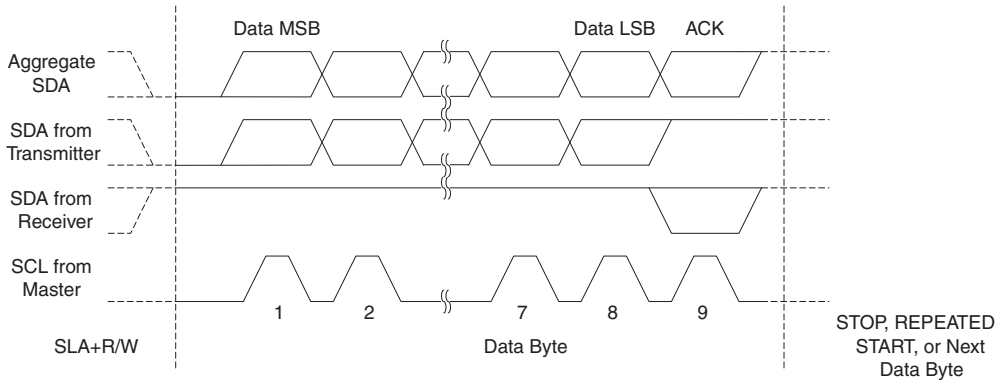

18.1.5 Combining Address and Data Packets Into a Transmission

A transmission basically consists of a START condition, a SLA+R/W, one or more data packets and a STOP condition. An empty message, consisting of a START followed by a STOP condition, is illegal. Note that the wired-ANDing of the SCL line can be used to implement handshaking between the Master and the Slave. The Slave can extend the SCL low period by pulling the SCL line low. This is useful if the clock speed set up by the Master is too fast for the Slave, or the Slave needs extra time for processing between the data transmissions. The Slave extending the SCL low period will not affect the SCL high period, which is determined by the Master. As a consequence, the Slave can reduce the TWI data transfer speed by prolonging the SCL duty cycle.

Figure 18-6 shows a typical data transmission. Note that several data bytes can be transmitted between the SLA+R/W and the STOP condition, depending on the software protocol implemented by the application software.

Figure 18-6. Typical Data Transmission

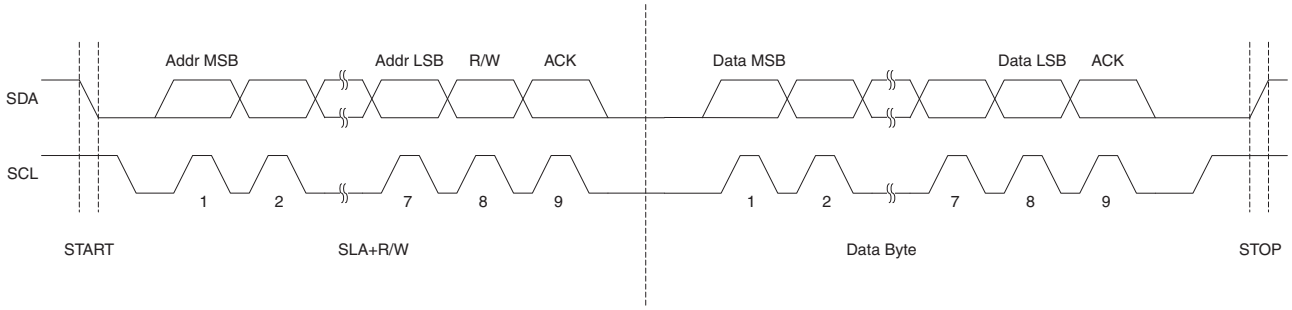

18.2 Multi-master Bus Systems, Arbitration and Synchronization

The TWI protocol allows bus systems with several masters. Special concerns have been taken in order to ensure that transmissions will proceed as normal, even if two or more masters initiate a transmission at the same time. Two problems arise in multi-master systems:

- An algorithm must be implemented allowing only one of the masters to complete the transmission. All other masters should cease transmission when they discover that they have lost the selection process. This selection process is called arbitration. When a contending master discovers that it has lost the arbitration process, it should immediately switch to Slave mode to check whether it is being addressed by the winning master. The fact that multiple masters have started transmission at the same time should not be detectable to the slaves (i.e., the data being transferred on the bus must not be corrupted).
- Different masters may use different SCL frequencies. A scheme must be devised to synchronize the serial clocks from all masters, in order to let the transmission proceed in a lockstep fashion. This will facilitate the arbitration process.

The wired-ANDing of the bus lines is used to solve both these problems. The serial clocks from all masters will be wired-ANDed, yielding a combined clock with a high period equal to the one from the master with the shortest high period. The low period of the combined clock is equal to the low period of the master with the longest low period. Note that all masters listen to the SCL line, effectively starting to count their SCL high and low Time-out periods when the combined SCL line goes high or low, respectively.

Figure 18-7. SCL Synchronization between Multiple Masters

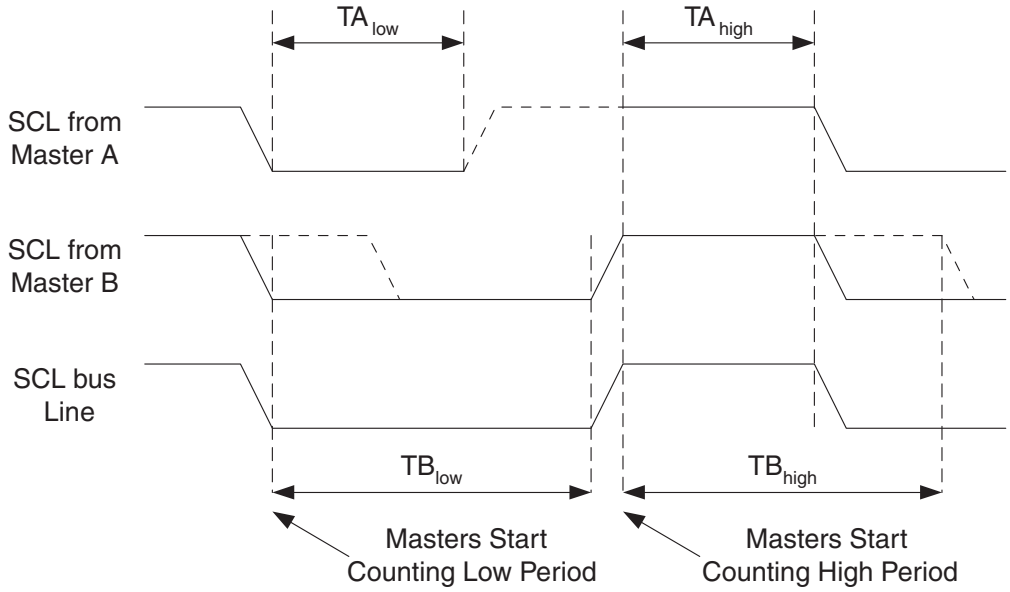

Arbitration is carried out by all masters continuously monitoring the SDA line after outputting data. If the value read from the SDA line does not match the value the master had output, it has lost the arbitration. Note that a master can only lose arbitration when it outputs a high SDA value while another master outputs a low value. The losing master should immediately go to Slave mode, checking if it is being addressed by the winning master. The SDA line should be left high, but losing masters are allowed to generate a clock signal until the end of the current data or address packet. Arbitration will continue until only one master remains, and this may take many bits. If several masters are trying to address the same slave, arbitration will continue into the data packet.

Figure 18-8. Arbitration between Two Masters

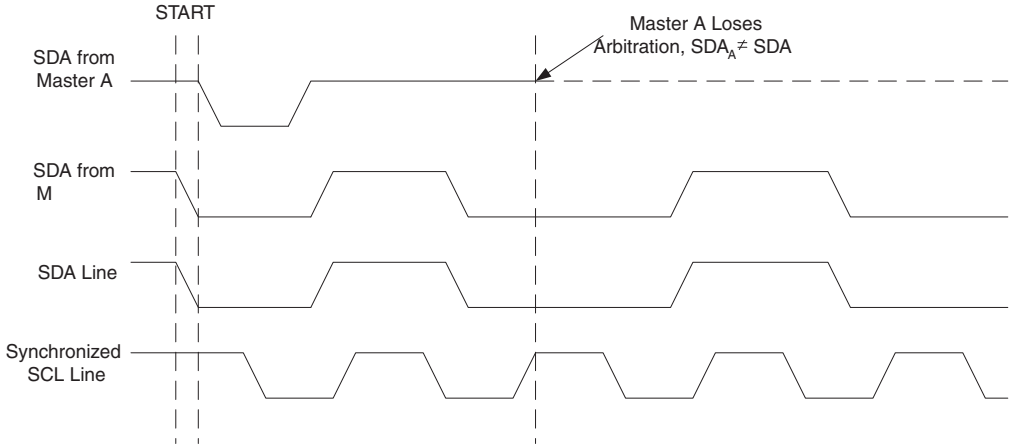

Note that arbitration is not allowed between:

- A REPEATED START condition and a data bit.
- A STOP condition and a data bit.
- A REPEATED START and a STOP condition.

It is the user software's responsibility to ensure that these illegal arbitration conditions never occur. This implies that in multi-master systems, all data transfers must use the same composition of SLA+R/W and data packets. In other words: All transmissions must contain the same number of data packets, otherwise the result of the arbitration is undefined.

18.3 Overview of the TWI Module

The TWI module is comprised of several submodules, as shown in Figure 18-9. All registers drawn in a thick line are accessible through the AT89LP data bus.

Figure 18-9. Overview of the TWI Module

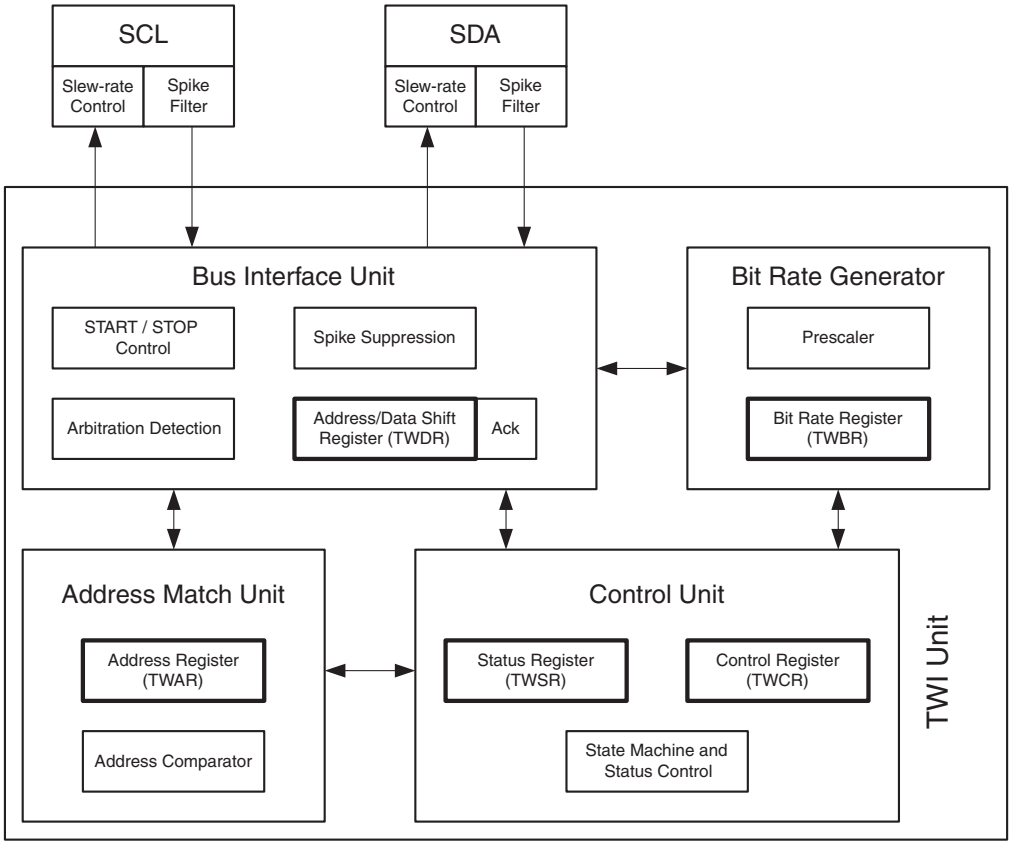

18.3.1 SCL and SDA Pins

These pins interface the AT89LP TWI with the rest of the MCU system. The output drivers contain a slew-rate limiter in order to conform to the TWI specification. The input stages contain a spike suppression unit removing spikes shorter than 50 ns.

18.3.2 Bit Rate Generator Unit

This unit controls the period of SCL when operating in a Master mode. The SCL period is controlled by settings in the TWI Bit Rate Register (TWBR). Slave operation does not depend on the Bit Rate setting, but the CPU clock frequency in the slave must be at least 16 times higher than the SCL frequency. Note that slaves may prolong the SCL low period, thereby reducing the

average TWI bus clock period. The SCL frequency is generated according to the following equation:

$$\text{SCL frequency} = \frac{\text{System Clock}}{16 \times (\text{TWBR} + 1)}$$

18.3.3 Bus Interface Unit

This unit contains the Data and Address Shift Register (TWDR), a START/STOP Controller and Arbitration detection hardware. The TWDR contains the address or data bytes to be transmitted, or the address or data bytes received. In addition to the 8-bit TWDR, the Bus Interface Unit also contains a register containing the (N)ACK bit to be transmitted or received. This (N)ACK Register is not directly accessible by the application software. However, when receiving, it can be set or cleared by manipulating the TWI Control Register (TWCR). When in Transmitter mode, the value of the received (N)ACK bit can be determined by the value in the TWSR. The START/STOP Controller is responsible for generation and detection of START, REPEATED START, and STOP conditions.

If the TWI has initiated a transmission as Master, the Arbitration Detection hardware continuously monitors the transmission trying to determine if arbitration is in process. If the TWI has lost an arbitration, the Control Unit is informed. Correct action can then be taken and appropriate status codes generated.

18.3.4 Address Match Unit

The Address Match unit checks if received address bytes match the 7-bit address in the TWI Address Register (TWAR). If the TWI General Call Recognition Enable (GC) bit in the TWAR is written to one, all incoming address bits will also be compared against the General Call address. Upon an address match, the Control unit is informed, allowing correct action to be taken. The TWI may or may not acknowledge its address, depending on settings in the TWCR.

18.3.5 Control Unit

The Control unit monitors the TWI bus and generates responses corresponding to settings in the TWI Control Register (TWCR). When an event requiring the attention of the application occurs on the TWI bus, the TWI Interrupt Flag (TWIF) is asserted. In the next clock cycle, the TWI Status Register (TWSR) is updated with a status code identifying the event. The TWSR only contains relevant status information when the TWI interrupt flag is asserted. At all other times, the TWSR contains a special status code indicating that no relevant status information is available. As long as the TWIF flag is set, the SCL line is held low. This allows the application software to complete its tasks before allowing the TWI transmission to continue.

The TWIF flag is set in the following situations:

- After the TWI has transmitted a START/REPEATED START condition.
- After the TWI has transmitted SLA+R/W.
- After the TWI has transmitted an address byte.
- After the TWI has lost arbitration.
- After the TWI has been addressed by own slave address or general call.
- After the TWI has received a data byte.
- After a STOP or REPEATED START has been received while still addressed as a Slave.
- When a bus error has occurred due to an illegal START or STOP condition.

18.4 Register Overview

Table 18-1. TWCR – Two-Wire Control Register

TWCR Address = AAH — Reset Value = X000 00XXB

Not Bit Addressable

	–	TWEN	STA	STO	TWIF	AA	–	–
Bit	7	6	5	4	3	2	1	0

Symbol	Function
TWEN	Two-wire Serial Interface Enable. Set to enable the TWI. Clear to disable the TWI.
STA	Start Flag. Set to send a START condition on the bus. Must be cleared by software.
STO	Stop Flag. Set to send a STOP condition on the bus. Cleared automatically by hardware when the STOP occurs.
TWIF	Two-wire Interface Interrupt Flag. Set by hardware when the TWI requests an interrupt. TWIF must be cleared by software. While TWIF is set, the SCL low period is stretched. Note that clearing this flag starts the operation of the TWI, so all accesses to the other TWI registers (TWAR, TWSR and TWDR) must be complete before clearing this flag.
AA	Assert Acknowledge Flag. Clear in master and slave receiver modes, to force a not acknowledge (high level on SDA). Clear to disable SLA or GCA recognition. Set to recognize SLA or GCA (if GC set) for entering slave receiver or transmitter modes. Set in master and slave receiver modes, to force an acknowledge (low level on SDA). This bit has no effect when in master transmitter mode. By clearing AA to zero, the device can be virtually disconnected from the Two-wire Serial Bus temporarily. Address recognition can then be resumed by setting the AA bit to one again.

Table 18-2. TWSR – Two-Wire Status Register

TWSR Address = ABH — Reset Value = 1111 1000B

Not Bit Addressable

	TWS7	TWS6	TWS5	TWS4	TWS3	0	0	0
Bit	7	6	5	4	3	2	1	0

Symbol	Function
TWS_{7-0}	Two-wire Interface Status. The current status code of the TWI logic and serial bus. See Table 18-6 through Table 18-10 for a description of the status codes. Note that the three least significant bits always read as zero. The Status code is valid only while TWIF remains set.

Table 18-3. TWAR – Two-Wire Address Register

TWAR Address = ACH — Reset Value = 1111 1110B

Not Bit Addressable

	TWA6	TWA5	TWA4	TWA3	TWA2	TWA1	TWA0	GC
Bit	7	6	5	4	3	2	1	0

Symbol	Function
TWA_{6-0}	Two-wire Interface Slave Address. The TWI will only respond to slave addresses that match this 7-bit address.
GC	General Call Enable. Set to enable General Call address (00h) recognition. Clear to disable General Call address recognition.

Table 18-4. TWDR – Two-Wire Data Register

TWDR Address = ADH — Reset Value = 1111 1111B

Not Bit Addressable

	TWD7	TWD6	TWD5	TWD4	TWD3	TWD2	TWD1	TWD0
Bit	7	6	5	4	3	2	1	0

Symbol	Function
TWD_{7-0}	Two-wire Interface Data. Writes to TWDR queue the next address or data byte for transmission. Reads from TWDR return the last address or data byte present on the bus. Writes/reads to/from TWDR must occur only while TWIF is set. Writes to TWDR while TWIF = 0 are ignored. Reads from TWDR while TWIF = 0 may return random data.

Table 18-5. TWBR – Two-Wire Bit Rate Register

TWBR Address = AEH — Reset Value = 0000 0000B

Not Bit Addressable

	TWB7	TWB6	TWB5	TWB4	TWB3	TWB2	TWB1	TWB0
Bit	7	6	5	4	3	2	1	0

Symbol	Function
TWB_{7-0}	Two-wire Interface Serial Bit Rate. TWBR is an 8-bit down counter that selects the division factor (÷1–256) for the bit rate generator. The bit rate generator is a frequency divider which generates the SCL clock frequency from the system clock in Master mode.

18.5 Using the TWI

The AT89LP TWI is byte-oriented and interrupt based. Interrupts are issued after all bus events, like reception of a byte or transmission of a START condition. Because the TWI is interrupt-based, the application software is free to carry on other operations during a TWI byte transfer. Note that the TWI Interrupt Enable (TWE) bit in IE2 together with the Global Interrupt Enable bit in EA allow the application to decide whether or not assertion of the TWIF flag should generate an interrupt request. If the TWE bit is cleared, the application must poll the TWIF flag in order to detect actions on the TWI bus.

When the TWIF flag is asserted, the TWI has finished an operation and awaits application response. In this case, the TWI Status Register (TWSR) contains a value indicating the current state of the TWI bus. The application software can then decide how the TWI should behave in the next TWI bus cycle by manipulating the TWCR and TWDR registers.

Figure 18-10 is a simple example of how the application can interface to the TWI hardware. In this example, a Master wishes to transmit a single data byte to a Slave. This description is quite abstract, a more detailed explanation follows later in this section. A simple code example implementing the desired behavior is also presented.

Figure 18-10. Interfacing the Application to the TWI in a Typical Transmission

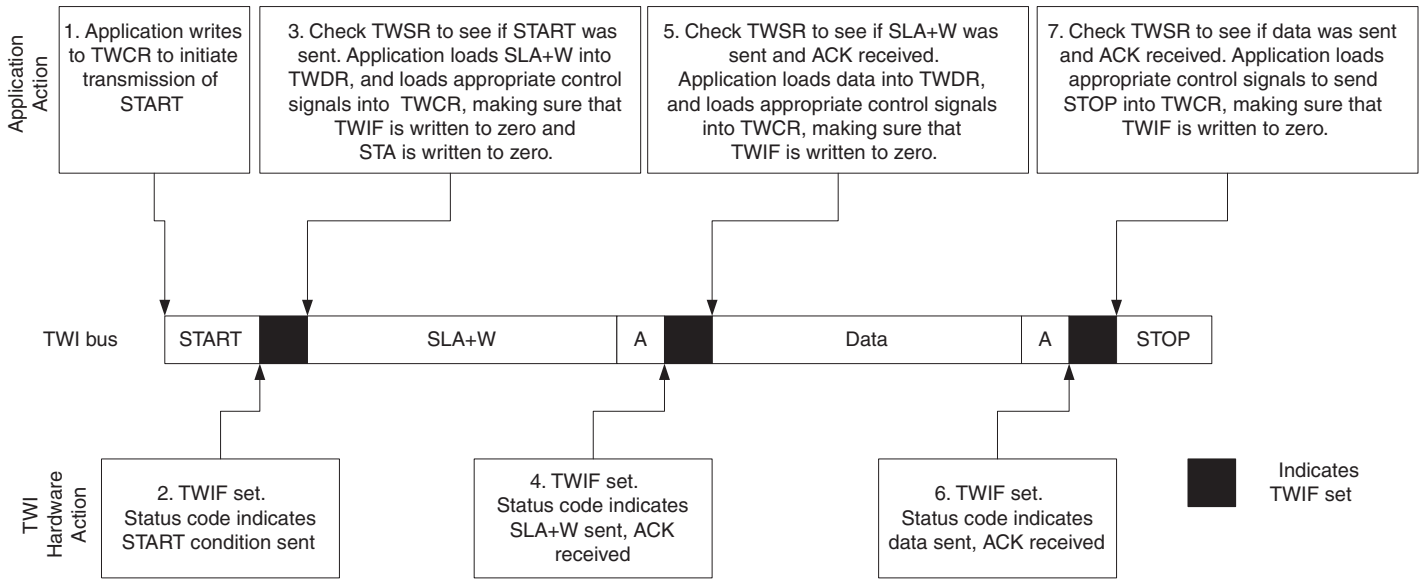

1. The first step in a TWI transmission is to transmit a START condition. This is done by writing a specific value into TWCR, instructing the TWI hardware to transmit a START condition. Which value to write is described later on. However, it is important that the TWIF bit is cleared in the value written. The TWI will not start any operation as long as the TWIF bit in TWCR is set. Immediately after the application has cleared TWIF, the TWI will initiate transmission of the START condition.
2. When the START condition has been transmitted, the TWIF flag in TWCR is set, and TWSR is updated with a status code indicating that the START condition has successfully been sent.
3. The application software should now examine the value of TWSR, to make sure that the START condition was successfully transmitted. If TWSR indicates otherwise, the application software might take some special action, like calling an error routine. Assuming that the status code is as expected, the application must load SLA+W into TWDR. Remember that TWDR is used both for address and data. After TWDR has been loaded with the desired SLA+W, a specific value must be written to TWCR, instructing the TWI hardware to transmit the SLA+W present in TWDR. Which value to write is described later on. However, it is important that the TWIF bit is cleared in the value written. The TWI will not start any operation as long as the TWIF bit in TWCR is set. Immediately after the application has cleared TWIF, the TWI will initiate transmission of the address packet.
4. When the address packet has been transmitted, the TWIF flag in TWCR is set, and TWSR is updated with a status code indicating that the address packet has successfully been sent. The status code will also reflect whether a slave acknowledged the packet or not.
5. The application software should now examine the value of TWSR, to make sure that the address packet was successfully transmitted, and that the value of the ACK bit was as expected. If TWSR indicates otherwise, the application software might take some special action, like calling an error routine. Assuming that the status code is as expected, the application must load a data packet into TWDR. Subsequently, a specific value must be written to TWCR, instructing the TWI hardware to transmit the data packet present in TWDR. Which value to write is described later on. However, it is important that the TWIF bit is cleared in the value written. The TWI will not start any operation as

long as the TWIF bit in TWCR is set. Immediately after the application has cleared TWIF, the TWI will initiate transmission of the data packet.

6. When the data packet has been transmitted, the TWIF flag in TWCR is set, and TWSR is updated with a status code indicating that the data packet has successfully been sent. The status code will also reflect whether a slave acknowledged the packet or not.
7. The application software should now examine the value of TWSR, to make sure that the data packet was successfully transmitted, and that the value of the ACK bit was as expected. If TWSR indicates otherwise, the application software might take some special action, like calling an error routine. Assuming that the status code is as expected, the application must write a specific value to TWCR, instructing the TWI hardware to transmit a STOP condition. Which value to write is described later on. However, it is important that the TWIF bit is cleared in the value written. The TWI will not start any operation as long as the TWIF bit in TWCR is set. Immediately after the application has cleared TWIF, the TWI will initiate transmission of the STOP condition. Note that TWIF is NOT set after a STOP condition has been sent.

Even though this example is simple, it shows the principles involved in all TWI transmissions. These can be summarized as follows:

- When the TWI has finished an operation and expects application response, the TWIF flag is set. The SCL line is pulled low until TWIF is cleared.
- When the TWIF flag is set, the user must update all TWI registers with the value relevant for the next TWI bus cycle. As an example, TWDR must be loaded with the value to be transmitted in the next bus cycle.
- After all TWI Register updates and other pending application software tasks have been completed, TWCR is written. When writing TWCR, the TWIF bit should be cleared. The TWI will then commence executing whatever operation was specified by the TWCR setting.

18.6 Transmission Modes

The TWI can operate in one of four major modes. These are named Master Transmitter (MT), Master Receiver (MR), Slave Transmitter (ST) and Slave Receiver (SR). Several of these modes can be used in the same application. As an example, the TWI can use MT mode to write data into a TWI EEPROM, MR mode to read the data back from the EEPROM. If other masters are present in the system, some of these might transmit data to the TWI, and then SR mode would be used. It is the application software that decides which modes are legal.

The following sections describe each of these modes. Possible status codes are described along with figures detailing data transmission in each of the modes. These figures contain the following abbreviations:

S: START condition

Rs: REPEATED START condition

R: Read bit (high level at SDA)

W: Write bit (low level at SDA)

A: Acknowledge bit (low level at SDA)

$\overline{A}$: Not acknowledge bit (high level at SDA)

Data: 8-bit data byte

P: STOP condition

SLA: Slave Address

In Figure 18-11 to Figure 18-14, circles are used to indicate that the TWIF flag is set. The numbers in the circles show the status code held in TWSR. At these points, actions must be taken by the application to continue or complete the TWI transfer. The TWI transfer is suspended until the TWIF flag is cleared by software.

When the TWIF flag is set, the status code in TWSR is used to determine the appropriate software action. For each status code, the required software action and details of the following serial transfer are given in Table 18-6 to Table 18-9.

18.6.1 Master Transmitter Mode

In the Master Transmitter mode, a number of data bytes are transmitted to a Slave Receiver. In order to enter a Master mode, a START condition must be transmitted. The format of the following address packet determines whether Master Transmitter or Master Receiver mode is to be entered. If SLA+W is transmitted, MT mode is entered, if SLA+R is transmitted, MR mode is entered.

A START condition is sent by writing the following value to TWCR:

TWCR	–	TWEN	STA	STO	TWIF	AA	–	–
Value	X	1	1	0	0	X	X	X

TWEN must be set to enable the Two-wire Serial Interface, STA must be written to one to transmit a START condition and TWIF must be cleared. The TWI will then test the Two-wire Serial Bus and generate a START condition as soon as the bus becomes free. After a START condition has been transmitted, the TWIF flag is set by hardware, and the status code in TWSR will be 08h (see Table 18-6). In order to enter MT mode, SLA+W must be transmitted. This is done by writing SLA+W to TWDR. Thereafter the TWIF bit should be cleared to continue the transfer.

When SLA+W has been transmitted and an acknowledgment bit has been received, TWIF is set again and a number of status codes in TWSR are possible. Possible status codes in Master mode are 18h, 20h, or 38h. The appropriate action to be taken for each of these status codes is detailed in Table 18-6.

After SLA+W has been successfully transmitted, a data packet should be transmitted. This is done by writing the data byte to TWDR. TWDR must only be written when TWIF is high. If not, the access will be discarded and the previous value will be transmitted. After updating TWDR, the TWIF bit should be cleared to continue the transfer. This scheme is repeated until the last byte has been sent and the transfer is ended by generating a STOP condition or a repeated START condition. A STOP condition is generated by writing the following value to TWCR:

TWCR	–	TWEN	STA	STO	TWIF	AA	–	–
Value	X	1	0	1	0	X	X	X

A REPEATED START condition is generated by writing the following value to TWCR:

TWCR	–	TWEN	STA	STO	TWIF	AA	–	–
Value	X	1	1	0	0	X	X	X

After a repeated START condition (status 10h) the Two-wire Serial Interface can access the same slave again, or a new slave without transmitting a STOP condition. Repeated START enables the master to switch between slaves, Master Transmitter mode and Master Receiver mode without losing control of the bus.

Table 18-6. Status Codes for Master Transmitter Mode

Status Code (TWSR)	Status of the Two-wire Serial Bus and Two-wire Serial Interface Hardware	Application Software Response					Next Action Taken by TWI Hardware
		To/from TWDR	To TWCR				
			STA	STO	TWIF	AA	
0x08	A START condition has been transmitted	Load SLA+W	0	0	1	X	SLA+W will be transmitted; ACK or NOT ACK will be received
10h	A repeated START condition has been transmitted	Load SLA+W	0	0	1	X	SLA+W will be transmitted; ACK or NOT ACK will be received
		Load SLA+R	0	0	1	X	SLA+R will be transmitted; Logic will switch to Master Receiver mode
18h	SLA+W has been transmitted; ACK has been received	Load data byte	0	0	1	X	Data byte will be transmitted and ACK or NOT ACK will be received
		No action	1	0	1	X	Repeated START will be transmitted
		No action	0	1	1	X	STOP condition will be transmitted andSTO flag will be reset
		No action	1	1	1	X	STOP condition followed by a START condition will be transmitted and STO flag will be reset
20h	SLA+W has been transmitted; NOT ACK has been received	Load data byte	0	0	1	X	Data byte will be transmitted and ACK or NOT ACK will be received
		No action	1	0	1	X	Repeated START will be transmitted
		No action	0	1	1	X	STOP condition will be transmitted and STO flag will be reset
		No action	1	1	1	X	STOP condition followed by a START condition will be transmitted and STO flag will be reset
28h	Data byte has been transmitted; ACK has been received	Load data byte	0	0	1	X	Data byte will be transmitted and ACK or NOT ACK will be received
		No action	1	0	1	X	Repeated START will be transmitted
		No action	0	1	1	X	STOP condition will be transmitted and STO flag will be reset
		No action	1	1	1	X	STOP condition followed by a START condition will be transmitted and STO flag will be reset
30h	Data byte has been transmitted; NOT ACK has been received	Load data byte	0	0	1	X	Data byte will be transmitted and ACK or NOT ACK will be received
		No actio	1	0	1	X	Repeated START will be transmitted
		No actio	0	1	1	X	STOP condition will be transmitted and STO flag will be reset
		No actio	1	1	1	X	STOP condition followed by a START condition will be transmitted and STO flag will be reset
38h	Arbitration lost in SLA+W or data bytes	No action	0	0	1	X	Two-wire Serial Bus will be released and not addressed slave mode entered
		No action	1	0	1	X	A START condition will be transmitted when the bus becomes free

Figure 18-11. Format and States in Master Transmitter Mode

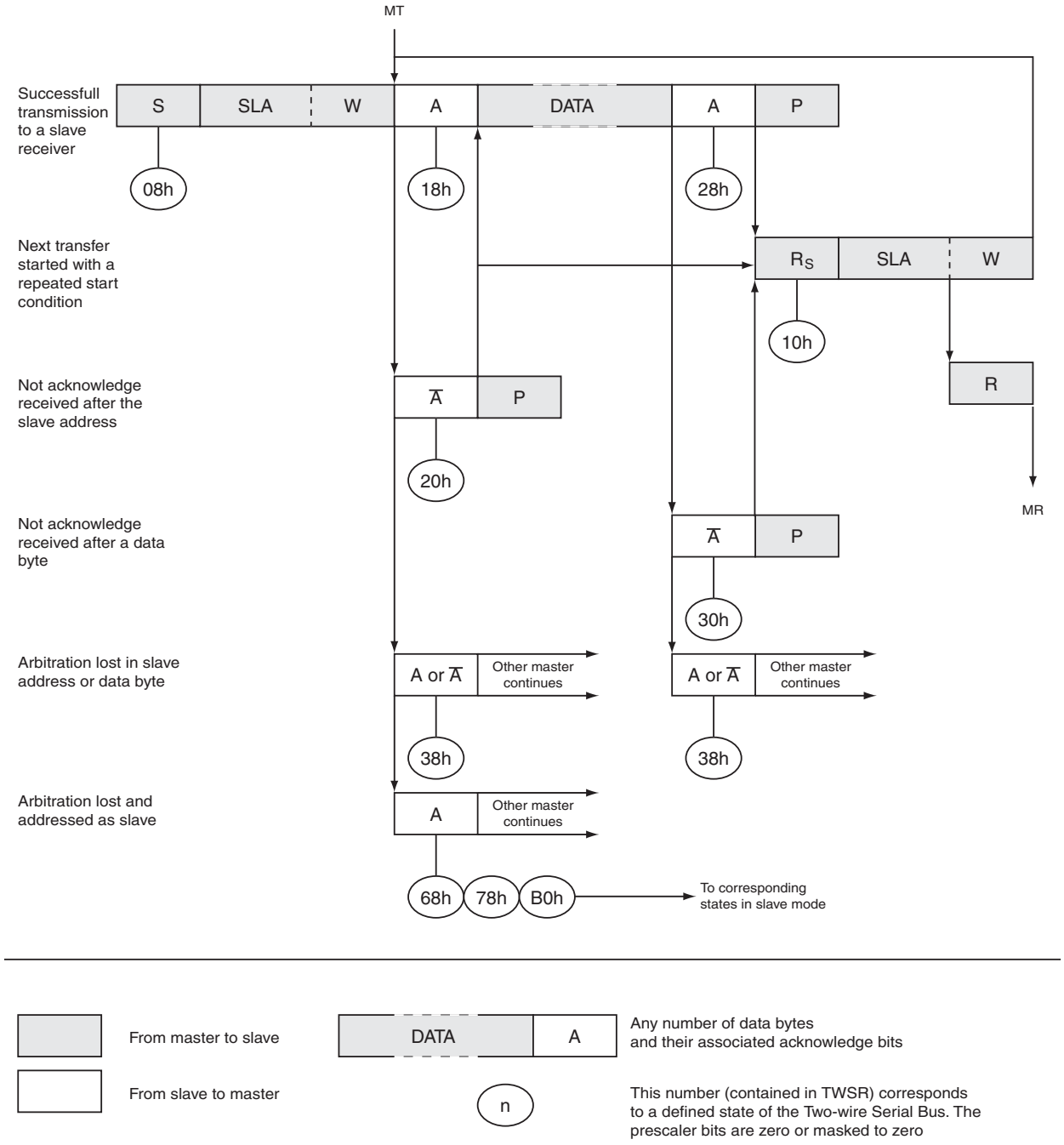

18.6.2 Master Receiver Mode

In the Master Receiver mode, a number of data bytes are received from a slave transmitter. In order to enter a Master mode, a START condition must be transmitted. The format of the following address packet determines whether Master Transmitter or Master Receiver mode is to be entered. If SLA+W is transmitted, MT mode is entered, if SLA+R is transmitted, MR mode is entered.

TWEN must be written to one to enable the Two-wire Serial Interface, STA must be written to one to transmit a START condition and TWIF must be cleared. The TWI will then test the Two-wire Serial Bus and generate a START condition as soon as the bus becomes free. After a START condition has been transmitted, the TWIF flag is set by hardware, and the status code in TWSR will be 08h (see Table 18-7). In order to enter MR mode, SLA+R must be transmitted. This is done by writing SLA+R to TWDR. Thereafter the TWIF bit should be cleared to continue the transfer.

When SLA+R has been transmitted and an acknowledgment bit has been received, TWIF is set again and a number of status codes in TWSR are possible. Possible status codes in Master mode are 38h, 40h or 48h. The appropriate action to be taken for each of these status codes is detailed in Table 18-7. Received data can be read from the TWDR Register when the TWIF flag is set high by hardware. This scheme is repeated until the last byte has been received. After the last byte has been received, the MR should inform the ST by sending a NACK after the last received data byte. The transfer is ended by generating a STOP condition or a repeated START condition.

Table 18-7. Status Codes for Master Receiver Mode

Status Code (TWSR)	Status of the Two-wire Serial Bus and Two-wire Serial Interface Hardware	Application Software Response					Next Action Taken by TWI Hardware
		To/from TWDR	To TWCR				
			STA	STO	TWIF	AA	
08h	A START condition has been transmitted	Load SLA+R	0	0	1	X	SLA+R will be transmitted; ACK or NOT ACK will be received
10h	A repeated START condition has been transmitted	Load SLA+R	0	0	1	X	SLA+R will be transmitted; ACK or NOT ACK will be received
		Load SLA+W	0	0	1	X	SLA+W will be transmitted; Logic will switch to Master Transmitter mode
38h	Arbitration lost in SLA+R or NOT ACK bit	No action	0	0	1	X	Two-wire Serial Bus will be released and not addressed Slave mode will be entered
		No action	1	0	1	X	A START condition will be transmitted when the bus becomes free
40h	SLA+R has been transmitted; ACK has been received	No action	0	0	1	0	Data byte will be received and NOT ACK will be returned
		No action	0	0	1	1	Data byte will be received and ACK will be returned
48h	SLA+R has been transmitted; NOT ACK has been received	No action	1	0	1	X	Repeated START will be transmitted
		No action	0	1	1	X	STOP condition will be transmitted and STO flag will be reset
		No action	1	1	1	X	STOP condition followed by a START condition will be transmitted and STO flag will be reset
50h	Data byte has been received; ACK has been returned	Read data byte	0	0	1	0	Data byte will be received and NOT ACK will be returned
		Read data byte	0	0	1	1	Data byte will be received and ACK will be returned
58h	Data byte has been received; NOT ACK has been returned	Read data byte	1	0	1	X	Repeated START will be transmitted
		Read data byte	0	1	1	X	STOP condition will be transmitted and STO flag will be reset
		Read data byte	1	1	1	X	STOP condition followed by a START condition will be transmitted and STO flag will be reset

Figure 18-12. Format and States in Master Receiver Mode

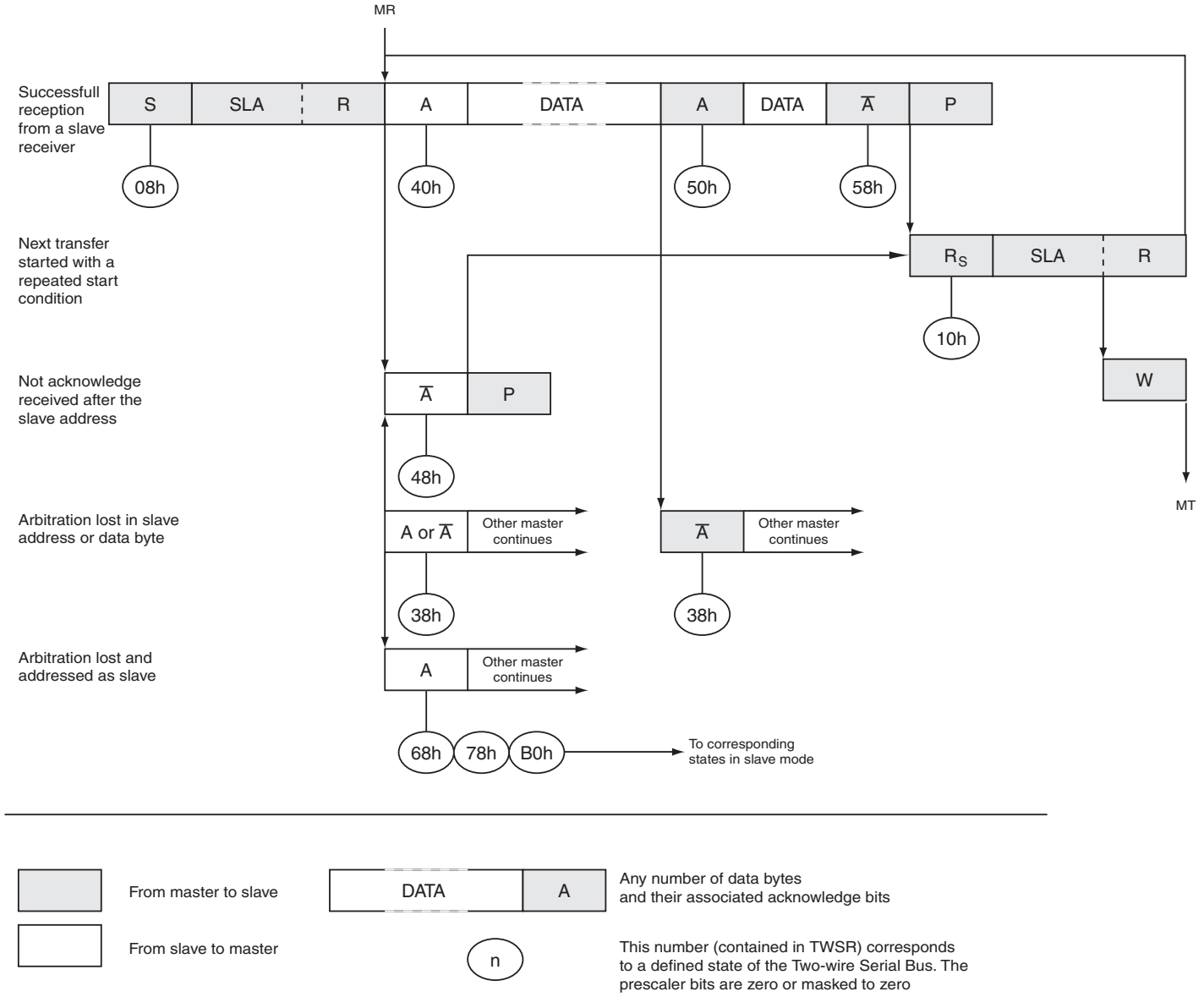

18.6.3 Slave Receiver Mode

In the Slave Receiver mode, a number of data bytes are received from a master transmitter. To initiate the Slave Receiver mode, TWAR and TWCR must be initialized as follows:

TWAR	TWA6	TWA5	TWA4	TWA3	TWA2	TWA1	TWA0	GC
Value	Device's own Slave Address							X

The upper seven bits are the address to which the Two-wire Serial Interface will respond when addressed by a master. If the LSB is set, the TWI will respond to the general call address (00h), otherwise it will ignore the general call address.:

TWCR	–	TWEN	STA	STO	TWIF	AA	–	–
Value	X	1	0	0	0	1	X	X

TWEN must be written to one to enable the TWI. The AA bit must be written to one to enable the acknowledgment of the device's own slave address or the general call address. STA and STO must be written to zero.

When TWAR and TWCR have been initialized, the TWI waits until it is addressed by its own slave address (or the general call address if enabled) followed by the data direction bit. If the direction bit is "0" (write), the TWI will operate in SR mode, otherwise ST mode is entered. After its own slave address and the write bit have been received, the TWIF flag is set and a valid status code can be read from TWSR. The status code is used to determine the appropriate software action. The appropriate action to be taken for each status code is detailed in Table 18-8. The Slave Receiver mode may also be entered if arbitration is lost while the TWI is in the Master mode (see states 68h and 78h).

If the AA bit is reset during a transfer, the TWI will return a "Not Acknowledge" ("1") to SDA after the next received data byte. This can be used to indicate that the slave is not able to receive any more bytes. While AA is zero, the TWI does not acknowledge its own slave address. However, the Two-wire Serial Bus is still monitored and address recognition may resume at any time by setting AA. This implies that the AA bit may be used to temporarily isolate the TWI from the Two-wire Serial Bus.

.

Table 18-8. Status Codes for Slave Receiver Mode

Status Code (TWSR)	Status of the Two-wire Serial Bus and Two-wire Serial Interface Hardware	Application Software Response					Next Action Taken by TWI Hardware
		To/from TWDR	To TWCR				
			STA	STO	TWIF	AA	
60h	Own SLA+W has been received; ACK has been returned	No action	X	0	1	0	Data byte will be received and NOT ACK will be returned
		No action	X	0	1	1	Data byte will be received and ACK will be returned
68h	Arbitration lost in SLA+R/W as master; own SLA+W has been received; ACK has been returned	No action	X	0	1	0	Data byte will be received and NOT ACK will be returned
		No action	X	0	1	1	Data byte will be received and ACK will be returned
70h	General call address has been received; ACK has been returned	No action	X	0	1	0	Data byte will be received and NOT ACK will be returned
		No action	X	0	1	1	Data byte will be received and ACK will be returned
78h	Arbitration lost in SLA+R/W as master; General call address has been received; ACK has been returned	No action	X	0	1	0	Data byte will be received and NOT ACK will be returned
		No action	X	0	1	1	Data byte will be received and ACK will be returned
80h	Previously addressed with own SLA+W; data has been received; ACK has been returned	Read data byte	X	0	1	0	Data byte will be received and NOT ACK will be returned
		Read data byte	X	0	1	1	Data byte will be received and ACK will be returned

Table 18-8. Status Codes for Slave Receiver Mode

88h	Previously addressed with own SLA+W; data has been received; NOT ACK has been returned	Read data byte	0	0	1	0	Switched to the not addressed Slave mode; no recognition of own SLA or GCA
		Read data byte	0	0	1	1	Switched to the not addressed Slave mode; own SLA will be recognized; GCA will be recognized if GC = “1”
		Read data byte	1	0	1	0	Switched to the not addressed Slave mode; no recognition of own SLA or GCA; a START condition will be transmitted when the bus becomes free
		Read data byte	1	0	1	1	Switched to the not addressed Slave mode; own SLA will be recognized; GCA will be recognized if GC = “1”; a START condition will be transmitted when the bus becomes free
90h	Previously addressed with general call; data has been received; ACK has been returned	Read data byte	X	0	1	0	Data byte will be received and NOT ACK will be returned
		Read data byte	X	0	1	1	Data byte will be received and ACK will be returned
98h	Previously addressed with general call; data has been received; NOT ACK has been returned	Read data byte	0	0	1	0	Switched to the not addressed Slave mode; no recognition of own SLA or GCA
		Read data byte	0	0	1	1	Switched to the not addressed Slave mode; own SLA will be recognized; GCA will be recognized if GC = “1”
		Read data byte	1	0	1	0	Switched to the not addressed Slave mode; no recognition of own SLA or GCA; a START condition will be transmitted when the bus becomes free
		Read data byte	1	0	1	1	Switched to the not addressed Slave mode; own SLA will be recognized; GCA will be recognized if GC = “1”; a START condition will be transmitted when the bus becomes free
A0h	A STOP condition or repeated START condition has been received while still addressed as slave	No Action	0	0	1	0	Switched to the not addressed Slave mode; no recognition of own SLA or GCA
		No Action	0	0	1	1	Switched to the not addressed Slave mode; own SLA will be recognized; GCA will be recognized if GC = “1”
		No Action	1	0	1	0	Switched to the not addressed Slave mode; no recognition of own SLA or GCA; a START condition will be transmitted when the bus becomes free
		No Action	1	0	1	1	Switched to the not addressed Slave mode; own SLA will be recognized; GCA will be recognized if GC = “1”; a START condition will be transmitted when the bus becomes free

Figure 18-13. Format and States in Slave Receiver Mode

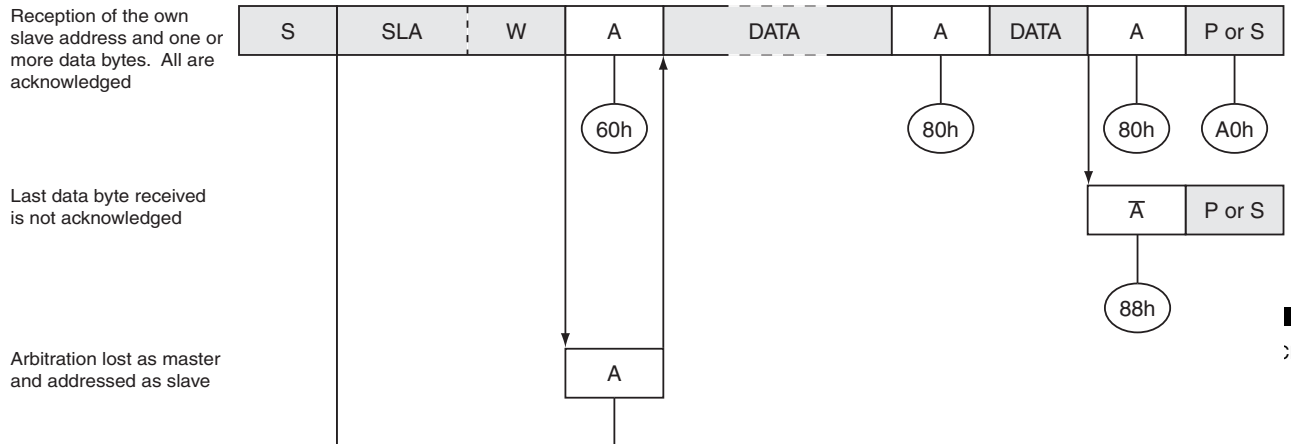

18.6.4 Slave Transmitter Mode

In the Slave Transmitter mode, a number of data bytes are transmitted to a master receiver. To initiate the Slave Transmitter mode, upper 7 bits of TWAR must be initialized with the address to which the Two-wire Serial Interface will respond when addressed by a master. If the LSB is set, the TWI will respond to the general call address (00h), otherwise it will ignore the general call address. TWEN must be written to one to enable the TWI. The AA bit must be written to one to enable the acknowledgment of the device's own slave address or the general call address. STA and STO must be written to zero.

When TWAR and TWCR have been initialized, the TWI waits until it is addressed by its own slave address (or the general call address if enabled) followed by the data direction bit. If the direction bit is "1" (read), the TWI will operate in ST mode, otherwise SR mode is entered. After its own slave address and the write bit have been received, the TWINT flag is set and a valid status code can be read from TWSR. The status code is used to determine the appropriate software action. The appropriate action to be taken for each status code is detailed in Table 18-9. The Slave Transmitter mode may also be entered if arbitration is lost while the TWI is in the Master mode (see state B0h).

If the AA bit is written to zero during a transfer, the TWI will transmit the last byte of the transfer. State C0h or state C8h will be entered, depending on whether the master receiver transmits a NACK or ACK after the final byte. The TWI is switched to the not addressed Slave mode, and will ignore the master if it continues the transfer. Thus the master receiver receives all "1s" as serial data. State C8h is entered if the master demands additional data bytes (by transmitting ACK), even though the slave has transmitted the last byte (AA zero and expecting NACK from the master). While AA is zero, the TWI does not respond to its own slave address. However, the Two-wire Serial Bus is still monitored and address recognition may resume at any time by setting AA. This implies that the AA bit may be used to temporarily isolate the TWI from the Two-wire Serial Bus.

Figure 18-14. Format and States in Slave Transmitter Mode

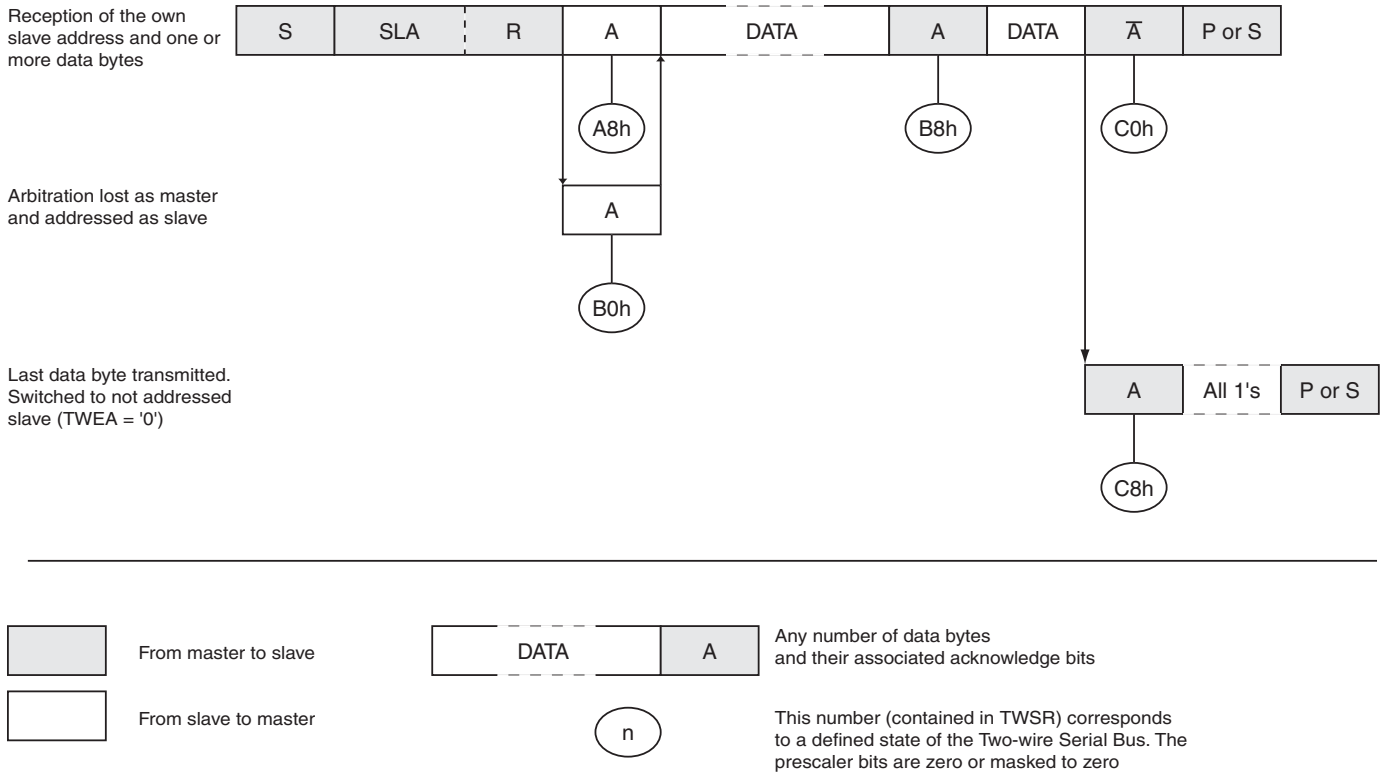

Table 18-9. Status Codes for Slave Transmitter Mode

Status Code (TWSR)	Status of the Two-wire Serial Bus and Two-wire Serial Interface Hardware	Application Software Response					Next Action Taken by TWI Hardware
		To/from TWDR	To TWCR				
			STA	STO	TWIF	AA	
A8h	Own SLA+R has been received; ACK has been returned	Load data byte	X	0	1	0	Last data byte will be transmitted and NOT ACK should be received
		Load data byte	X	0	1	1	Data byte will be transmitted and ACK should be received
B0h	Arbitration lost in SLA+R/W as master; own SLA+R has been received; ACK has been returned	Load data byte	X	0	1	0	Last data byte will be transmitted and NOT ACK should be received
		Load data byte	X	0	1	1	Data byte will be transmitted and ACK should be received
B8h	Data byte in TWDR has been transmitted; ACK has been received	Load data byte	X	0	1	0	Last data byte will be transmitted and NOT ACK should be received
		Load data byte	X	0	1	1	Data byte will be transmitted and ACK should be received
C0h	Data byte in TWDR has been transmitted; NOT ACK has been received	No action	0	0	1	0	Switched to the not addressed Slave mode; no recognition of own SLA or GCA
		No action	0	0	1	1	Switched to the not addressed Slave mode; own SLA will be recognized; GCA will be recognized if GC = “1”
		No action	1	0	1	0	Switched to the not addressed Slave mode; no recognition of own SLA or GCA; a START condition will be transmitted when the bus becomes free
		No action	1	0	1	1	Switched to the not addressed Slave mode; own SLA will be recognized; GCA will be recognized if GC = “1”; a START condition will be transmitted when the bus becomes free
C8h	Last data byte in TWDR has been transmitted (AA = “0”); ACK has been received	No action	0	0	1	0	Switched to the not addressed Slave mode; no recognition of own SLA or GCA
		No action	0	0	1	1	Switched to the not addressed Slave mode; own SLA will be recognized; GCA will be recognized if GC = “1”
		No action	1	0	1	0	Switched to the not addressed Slave mode; no recognition of own SLA or GCA; a START condition will be transmitted when the bus becomes free
		No action	1	0	1	1	Switched to the not addressed Slave mode; own SLA will be recognized; GCA will be recognized if GC = “1”; a START condition will be transmitted when the bus becomes free

18.6.5 Miscellaneous States

There are two status codes that do not correspond to a defined TWI state, see Table 18-10.

Status F8h indicates that no relevant information is available because the TWIF flag is not set. This occurs between other states, and when the TWI is not involved in a serial transfer.

Status 00h indicates that a bus error has occurred during a Two-wire Serial Bus transfer. A bus error occurs when a START or STOP condition occurs at an illegal position in the format frame. Examples of such illegal positions are during the serial transfer of an address byte, a data byte, or an acknowledge bit. When a bus error occurs, TWIF is set. To recover from a bus error, the STO flag must set and TWIF must be cleared. This causes the TWI to enter the not addressed Slave mode and to clear the STO flag (no other bits in TWCR are affected). The SDA and SCL lines are released, and no STOP condition is transmitted.

Table 18-10. Miscellaneous States

Status Code (TWSR)	Status of the Two-wire Serial Bus and Two-wire Serial Interface hardware	Application Software Response					Next Action Taken by TWI Hardware
		To/from TWDR	To TWCR				
			STA	STO	TWIF	AA	
F8h	No relevant state information available; TWIF = “0”	No action	No action				Wait or proceed current transfer
00h	Bus error due to an illegal START or STOP condition	No action	0	1	1	X	Only the internal hardware is affected, no STOP condition is sent on the bus. In all cases, the bus is released and STO is cleared.

18.6.6 Combining Several TWI Modes

In some cases, several TWI modes must be combined in order to complete the desired action. Consider for example reading data from a serial EEPROM. Typically, such a transfer involves the following steps:

1. The transfer must be initiated.
2. The EEPROM must be instructed what location should be read.
3. The reading must be performed.
4. The transfer must be finished.

Note that data is transmitted both from Master to Slave and vice versa. The Master must instruct the Slave what location it wants to read, requiring the use of the MT mode. Subsequently, data must be read from the Slave, implying the use of the MR mode. Thus, the transfer direction must be changed. The Master must keep control of the bus during all these steps, and the steps should be carried out as an atomic operation. If this principle is violated in a multi-master system, another Master can alter the data pointer in the EEPROM between steps 2 and 3, and the Master will read the wrong data location. Such a change in transfer direction is accomplished by transmitting a REPEATED START between the transmission of the address byte and reception of the data. After a REPEATED START, the Master keeps ownership of the bus. The following figure shows the flow in this transfer.

Figure 18-15. Combining Several TWI Modes to Access a Serial EEPROM

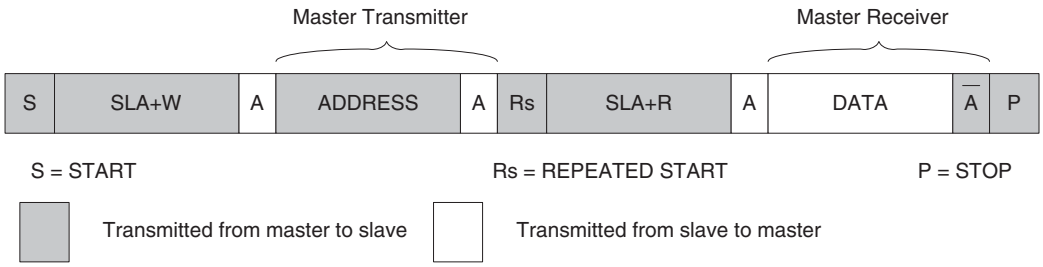

19. Dual Analog Comparators

The AT89LP3240/6440 provides two analog comparators. The analog comparators have the following features:

- Internal 3-level Voltage Reference (1.2V, 1.3V, 1.4V)
- Four Shared Analog Input Channels
  - Configure as Multiple Input Window Comparator
- Selectable Interrupt Conditions
  - High- or Low-level
  - Rising- or Falling-edge
  - Output Toggle
- Hardware Debouncing Modes

Figure 19-1. Dual Comparator Block Diagram

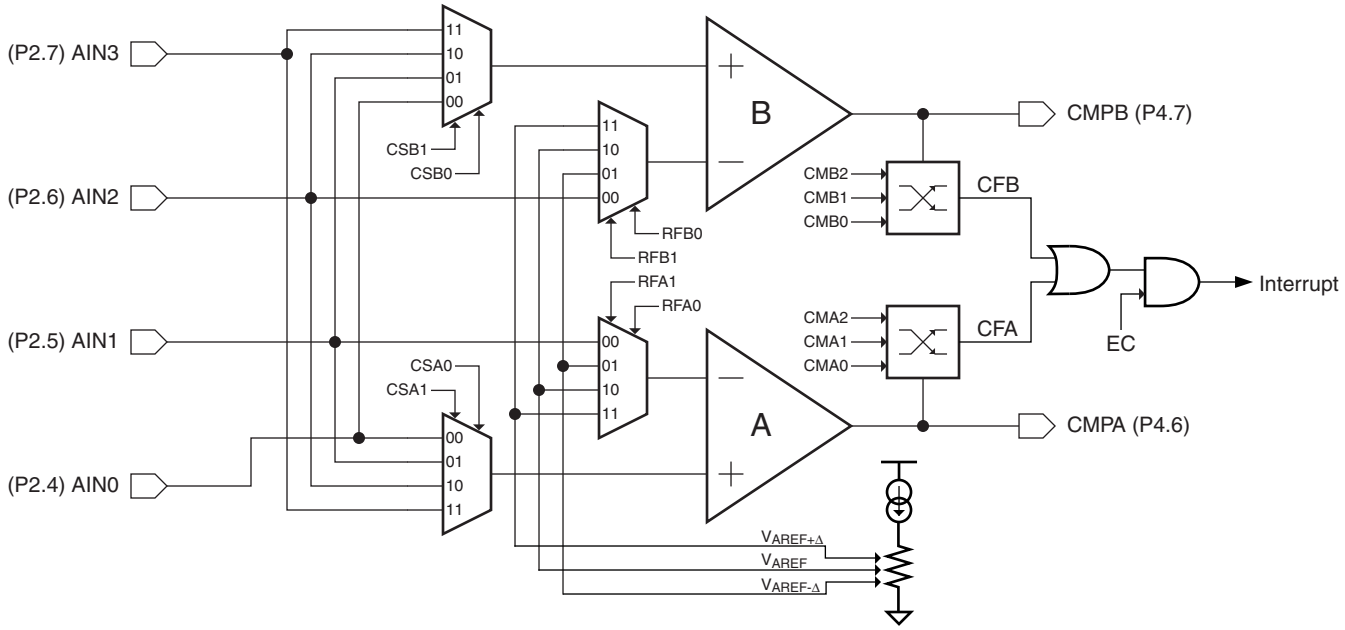

A block diagram of the dual analog comparators with relevant connections is shown in Figure 19-1. Input options allow the comparators to function in a number of different configurations as shown in Figure 19-4. Comparator operation is such that the output is a logic “1” when the positive input is greater than the negative input. Otherwise the output is a zero. Setting the CENA (ACSRA.3) and CENB (ACSRB.3) bits enable Comparator A and B respectively. The user must

also set the CONA (ACSRA.5) or CONB (ACSRB.5) bits to connect the comparator inputs before using a comparator. When a comparator is first enabled, the comparator output and interrupt flag are not guaranteed to be stable for 10 µs. The corresponding comparator interrupt should not be enabled during that time, and the comparator interrupt flag must be cleared before the interrupt is enabled in order to prevent an immediate interrupt service. Before enabling the comparators, the analog inputs should be tristated by putting P2.4, P2.5, P2.6 and P2.7 into input-only mode. See "Port Analog Functions" on page 48.

Each comparator may be configured to cause an interrupt under a variety of output value conditions by setting the CMx_{2-0} bits in ACSR*x*. The comparator interrupt flags CF*x* in ACSR*x* are set whenever the comparator outputs match the conditions specified by $CMx_{2-0.}$ The flags may be polled by software or may be used to generate an interrupt and must be cleared by software. Both comparators share a common interrupt vector. If both comparators are enabled, the user needs to read the flags after entering the interrupt service routine to determine which comparator caused the interrupt.

The CAC_{1-0} and CBC_{1-0} bits in AREF control when the comparator interrupts sample the comparator outputs. Normally the outputs are sampled every clock system; however, the outputs may also be sampled whenever Timer 0, Timer 1 or Timer 2 overflows. These settings allow the comparators to be sampled at a specific time or to reduce the number of comparator events seen by the system when using level sensitive modes. The comparators will continue to function during Idle mode. If this is not the desired behavior, the comparators should be disabled before entering Idle. The comparators are always disabled during Power-down mode.

19.1 Analog Input Muxes

The positive input terminal of each comparator may be connected to any of the four analog input pins by changing the CSA_{1-0} or CSB_{1-0} bits in ACSRA and ACSRB. When changing the analog input pins, the comparator must be disconnected from its inputs by clearing the CONA or CONB bits. The connection is restored by setting the bits again after the muxes have been modified.

```
    CLR   EC            ; Disable comparator interrupts
    ANL   ACSRA, #0DFh  ; Clear CONA to disconnect COMP A
    ...                 ; Modify CSA or RFA bits
    ORL   ACSRA, #020h  ; Set CONA to connect COMP A
    ANL   ACSRA, #0EFh  ; Clear any spurious interrupt
  SETB    EC            ; Re-enable comparator interrupts
```

The corresponding comparator interrupt should not be enabled while the inputs are being changed, and the comparator interrupt flag must be cleared before the interrupt is re-enabled in order to prevent an unintentional interrupt request.

The equivalent model for the analog input circuitry is illustrated in Figure 20-3. An analog source applied to AINn is subjected to the pin capacitance and input leakage of that pin, regardless of whether that channel is selected as input to the comparator. When the channel is selected, the source must drive the input capacitance of the comparator through the series resistance (combined resistance in the input path).

Figure 19-2. Equivalent Analog Input Model

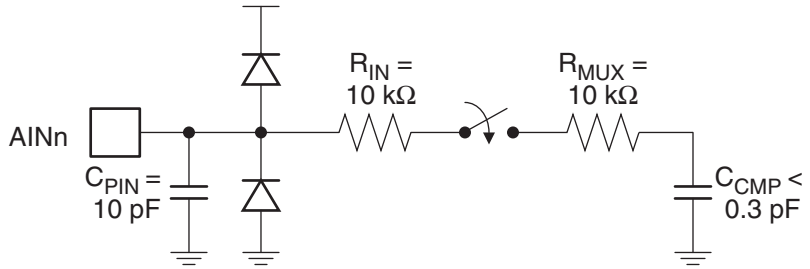

19.2 Internal Reference Voltage

The negative input terminal of each comparator may be connected to an internal voltage reference by changing the RFB_{1-0} or RFA_{1-0} bits in AREF. The internal reference voltage, V_{AREF}, is set to 1.3 V ±5%. The voltage reference also provides two additional voltage levels approximately 100 mV above and below V_{AREF}. These levels may be used to configure the comparators as an internally referenced window comparator with up to four input channels. Changing the reference input must follow the same routine used for changing the positive input as described in "Analog Input Muxes" above.

19.3 Comparator Interrupt Debouncing

The comparator output is normally sampled every clock cycle. The conditions on the analog inputs may be such that the comparator output will toggle excessively. This is especially true if applying slow moving analog inputs. Three debouncing modes are provided to filter out this noise for edge-triggered interrupts. In debouncing mode, the comparator uses Timer 1 to modulate its sampling time when CxC_{1-0} = 00B. When a relevant transition occurs, the comparator waits until two Timer 1 overflows have occurred before resampling the output. If the new sample agrees with the expected value, CF*x* is set. Otherwise, the event is ignored. The filter may be tuned by adjusting the time-out period of Timer 1. Because Timer 1 is free running, the debouncer must wait for two overflows to guarantee that the sampling delay is at least 1 time-out period. Therefore, after the initial edge event, the interrupt may occur between 1 and 2 time-out periods later. See Figure 19-3. When the comparator clock is provided by one of the timer overflows, i.e. CxC_{1-0} != 00B, any change in the comparator output must be valid after 4 samples to be accepted as an edge event.

Figure 19-3. Negative Edge with Debouncing Example

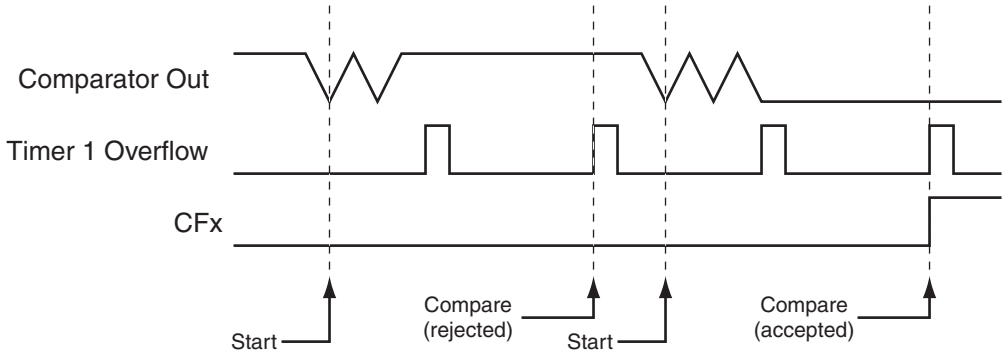

Figure 19-4. Dual Comparator Configuration Examples

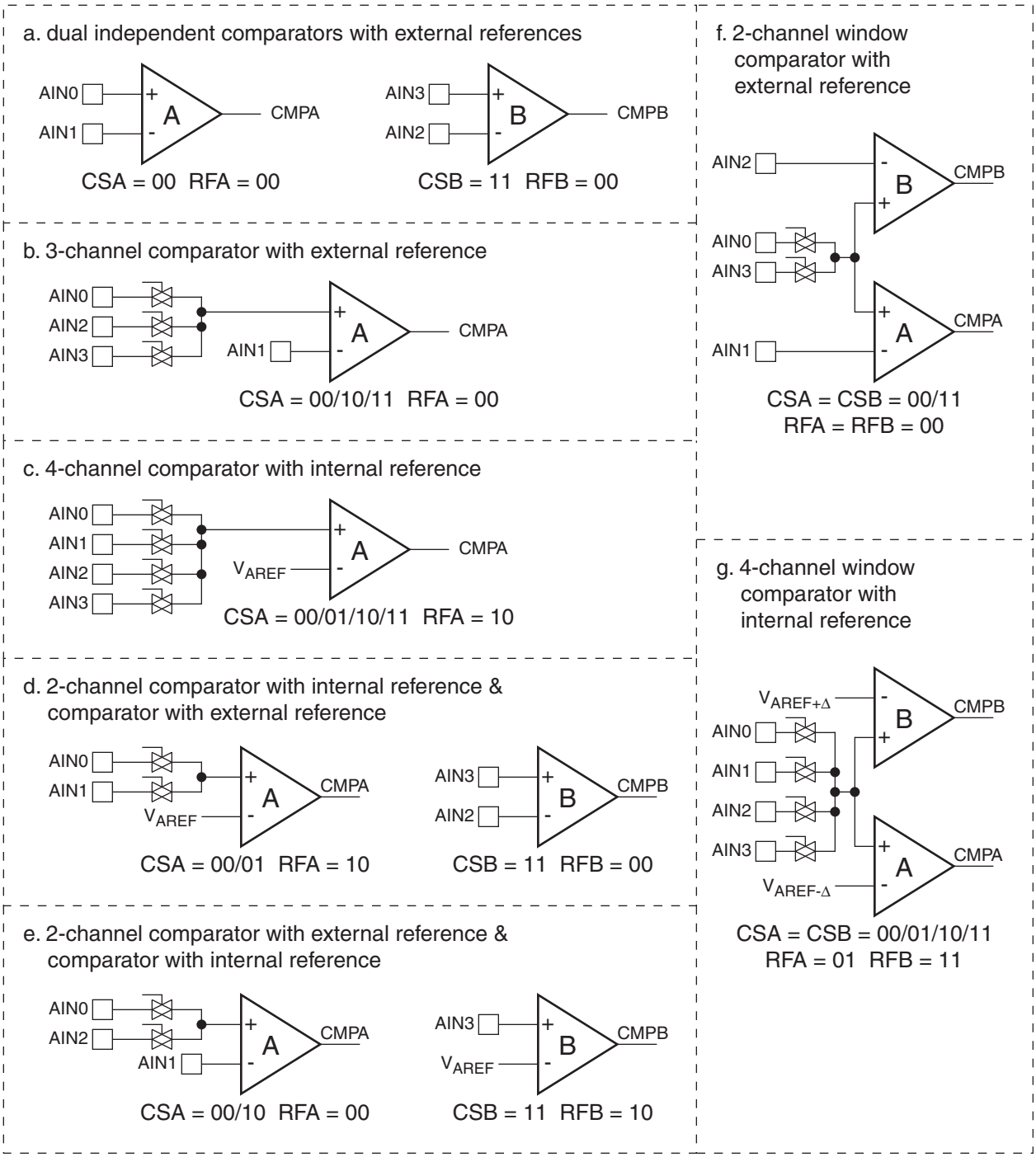

Table 19-1. ACSRA – Analog Comparator A Control & Status Register

ACSRA = 97H — Reset Value = 0000 0000B

Not Bit Addressable

	CSA1	CSA0	CONA	CFA	CENA	CMA2	CMA1	CMA0
Bit	7	6	5	4	3	2	1	0

Symbol	Function
CSA [1-0]	Comparator A Positive Input Channel Select[1] **CSA1** **CSA0** **A+ Channel** 0 0 AIN0 (P2.4) 0 1 AIN1 (P2.5) 1 0 AIN2 (P2.6) 1 1 AIN3 (P2.7)
CONA	Comparator A Input Connect. When CONA = 1 the analog input pins are connected to the comparator. When CONA = 0 the analog input pins are disconnected from the comparator. CONA must be cleared to 0 before changing CSA[1-0] or RFA[1-0].
CFA	Comparator A Interrupt Flag. Set when the comparator output meets the conditions specified by the CMA [2-0] bits and CENA is set. The flag must be cleared by software. The interrupt may be enabled/disabled by setting/clearing bit 6 of IE.
CENA	Comparator A Enable. Set this bit to enable the comparator. Clearing this bit will force the comparator output low and prevent further events from setting CFA. When CENA = 1 the analog input pins, P2.4—P2.7, have their digital inputs disabled if they are configured in input-only mode.
CMA [2-0]	Comparator A Interrupt Mode **CMA2** **CMA1** **CMA0** **Interrupt Mode** 0 0 0 Negative (Low) level 0 0 1 Positive edge 0 1 0 Toggle with debouncing[2] 0 1 1 Positive edge with debouncing[2] 1 0 0 Negative edge 1 0 1 Toggle 1 1 0 Negative edge with debouncing[2] 1 1 1 Positive (High) level

Notes: 1. CONA must be cleared to 0 before changing CSA[1-0].
2. Debouncing modes require the use of Timer 1 to generate the sampling delay.

Table 19-2. ACSRB – Analog Comparator B Control & Status Register

ACSRB = 9FH — Reset Value = 1100 0000B

Not Bit Addressable

	CSB1	CSB0	CONB	CFB	CENB	CMB2	CMB1	CMB0
Bit	7	6	5	4	3	2	1	0

Symbol	Function
CSB [1-0]	Comparator B Positive Input Channel Select[1] **CSB1 / CSB0 / B+ Channel** 0 0 AIN0 (P2.4) 0 1 AIN1 (P2.5) 1 0 AIN2 (P2.6) 1 1 AIN3 (P2.7)
CONB	Comparator B Input Connect. When CONB = 1 the analog input pins are connected to the comparator. When CONB = 0 the analog input pins are disconnected from the comparator. CONB must be cleared to 0 before changing CSB[1-0] or RFB[1-0].
CFB	Comparator B Interrupt Flag. Set when the comparator output meets the conditions specified by the CMB [2-0] bits and CENB is set. The flag must be cleared by software. The interrupt may be enabled/disabled by setting/clearing bit 6 of IE.
CENB	Comparator B Enable. Set this bit to enable the comparator. Clearing this bit will force the comparator output low and prevent further events from setting CFB. When CENB = 1 the analog input pins, P2.4—P2.7, have their digital inputs disabled if they are configured in input-only mode.
CMB [2-0]	Comparator B Interrupt Mode **CMB2 / CMB1 / CMB0 / Interrupt Mode** 0 0 0 Negative (Low) level 0 0 1 Positive edge 0 1 0 Toggle with debouncing[2] 0 1 1 Positive edge with debouncing[2] 1 0 0 Negative edge 1 0 1 Toggle 1 1 0 Negative edge with debouncing[2] 1 1 1 Positive (High) level

Notes: 1. CONB must be cleared to 0 before changing CSB[1-0].
2. Debouncing modes require the use of Timer 1 to generate the sampling delay.

Table 19-3. AREF – Analog Comparator Reference Control Register

AREF = AFH — Reset Value = 0000 0000B

Not Bit Addressable

	CBC1	CBC0	RFB1	RFB0	CAC1	CAC0	RFA1	RFA0
Bit	7	6	5	4	3	2	1	0

Symbol	Function
CSC [1-0]	Comparator B Clock Select **CBC1 CBC0 Clock Source** 0 0 System Clock 0 0 Timer 0 Overflow 0 1 Timer 1 Overflow 0 1 Timer 2 Overflow
RFB [1-0]	Comparator B Negative Input Channel Select(1) **CRF1 RFB0 B- Channel** 0 0 AIN2 (P2.6) 0 0 Internal $V_{AREF-\Delta}$ (~1.2V) 0 1 Internal V_{AREF} (~1.3V) 0 1 Internal $V_{AREF+\Delta}$ (~1.4V)
CAC [1-0]	Comparator A Clock Select **CAC1 CAC0 Clock Source** 0 0 System Clock 0 0 Timer 0 Overflow 0 1 Timer 1 Overflow 0 1 Timer 2 Overflow
RFA [1-0]	Comparator A Negative Input Channel Select(2) **RFA1 RFA0 A- Channel** 0 0 AIN1 (P2.5) 0 0 Internal $V_{AREF-\Delta}$ (~1.2V) 0 1 Internal V_{AREF} (~1.3V) 0 1 Internal $V_{AREF+\Delta}$ (~1.4V)

Notes: 1. CONB (ACSRB.5) must be cleared to 0 before changing RFB[1-0].
2. CONA (ACSRA.5) must be cleared to 0 before changing RFA[1-0].

20. Digital-to-Analog/Analog-to-Digital Converter

The AT89LP3240/6440 includes a 10-bit Data Converter (DADC) with the following features:

- Digital-to-Analog (DAC) or Analog-to-Digital (ADC) Mode
- 10-bit Resolution
- 6.5 µs Conversion Time
- 8 Multiplexed Single-ended Channels or 4 Differential Channels
- Selectable 1.0V±10% Internal Reference Voltage
- Optional Left-Adjust of Conversion Results
- Single Conversion or Timer-triggered Mode
- Interrupt on Conversion Complete

The AT89LP3240/6440 features a 10-bit successive approximation data converter that functions in either Analog-to-Digital (ADC) or Digital-to-Analog (DAC) mode. A block diagram of the converter is shown in Figure 20-1. An 8-channel Analog Multiplexer connects eight single-ended or four differential voltage inputs from the pins of Port 0 to a sample-and-hold circuit that in turn provides an input to the successive approximation block. The Sample-and-Hold circuit ensures that the input voltage to the ADC is held at a constant level during conversion. The SAR block digitizes the analog voltage into a 10-bit value accessible through a data register. The SAR block also operates in reverse to generate an analog voltage on Port 2 from a 10-bit digital value.

ADC results are available in the DADL and DADH register pair. The ADC result scale is determined by the reference voltage (V_{REF}) generated either internally from a 1.0V reference or externally from $V_{DD}/2$. The ADC results are always represented in signed 2's complement form, with single-ended voltage channels referring to the level above or below $V_{DD}/2$. The 10-bit results may be right or left adjusted within the 16-bit register. The sign is extended through the 6 MSBs of right-adjusted results and the 6 LSBs of left-adjusted results are zeroed. If only 8-bit precision is required, the user should select left-adjusted by setting LADJ in DADC and read only the DADH register. Example results are listed in Table 20-1.

The conversion formulas are as follows:

$$\text{(Singled-Ended)} \qquad ADC = 511 \times \frac{V_{IN} - V_{DD}/2}{V_{REF}}$$

$$\text{(Differential)} \qquad ADC = 511 \times \frac{V_{IN+} - V_{IN-}}{V_{REF}}$$

Conversion results can be converted into unsigned binary by adding 02h to DADH in right-adjusted mode or 80h to DADH in left-adjusted mode. When using the external reference ($V_{DD}/2$) in single-ended mode this is equivalent to:

$$\text{(Unsigned Singled-Ended)} \qquad ADC = 1023 \times \frac{V_{IN}}{V_{DD}}$$

To convert the unsigned binary value back to 2's complement, subtract 02h from DADH in right-adjusted mode or 80h from DADH in left-adjusted mode. Note that the DADH/DADL registers cannot be directly manipulated as they are read-only in ADC mode and write-only in DAC mode.

Table 20-1. Example ADC Conversion Codes

Right Adjust	Left Adjust	Single-Ended Mode (V_{IN})	Differential Mode ($V_{IN+} – V_{IN-}$)
0	0	$V_{DD}/2$	0
0100h	4000h	$V_{DD}/2 + 1/2 \times V_{REF}$	$1/2 \times V_{REF}$
01FFh	7FC0h	$V_{DD}/2 + 511/512 \times V_{REF}$	$511/512 \times V_{REF}$
FF00h	C000h	$V_{DD}/2 – 1/2 \times V_{REF}$	$–1/2 \times V_{REF}$
FE01h	8040h	$V_{DD}/2 – 511/512 \times V_{REF}$	$–511/512 \times V_{REF}$

Figure 20-1. DADC Block Diagram

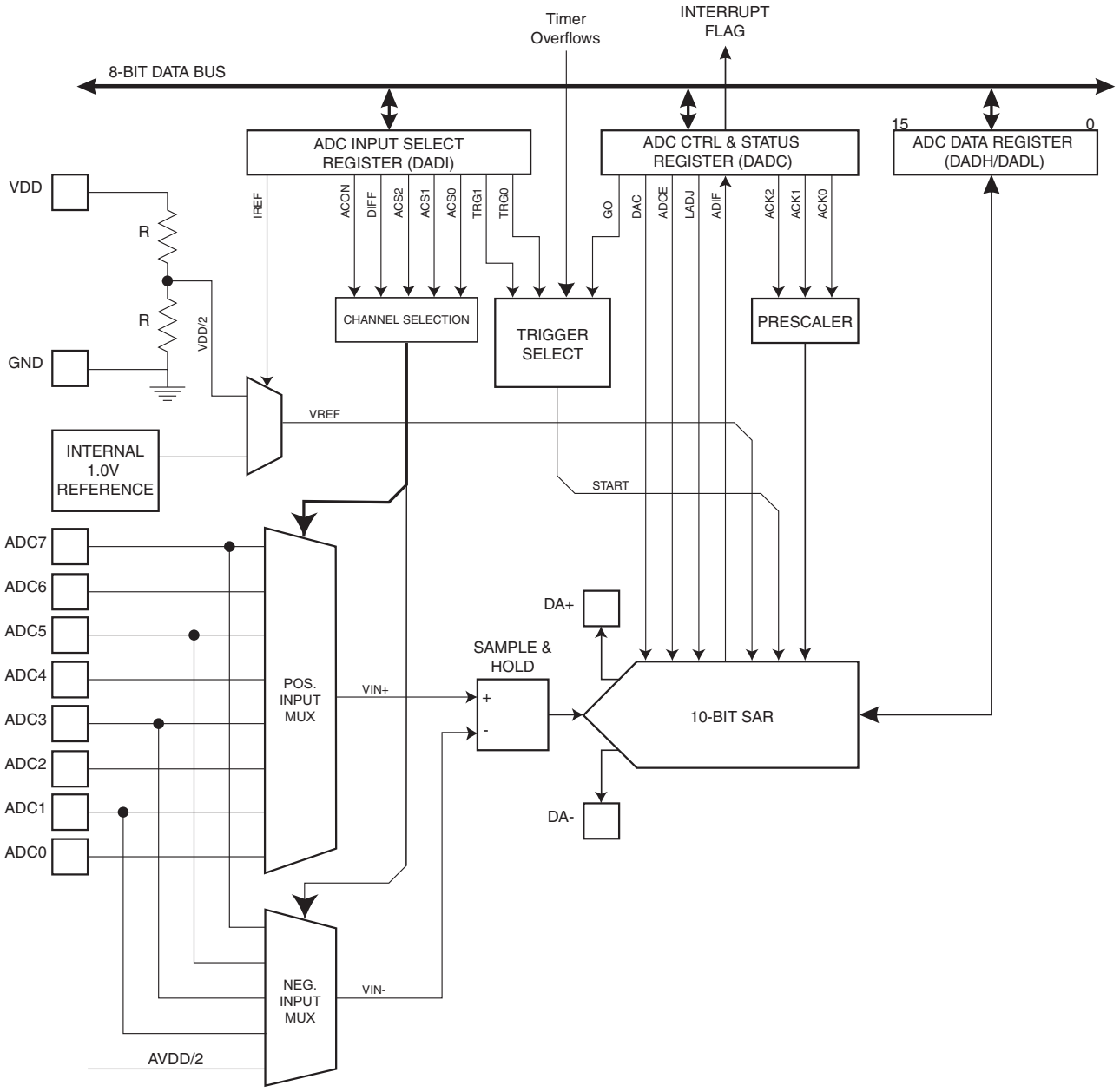

20.1 ADC Operation

The ADC converts an analog input voltage to a 10-bit signed digital value through successive approximation. When DIFF (DADI.3) is zero, the ADC operates in single-ended mode and the input voltage is the difference between the voltage at the input pin and $V_{DD}/2$. In differential mode (DIFF = 1) the input voltage is the difference between the positive and negative input pins. The minimum value represents zero difference and the maximum values represent a difference of positive or negative V_{REF} minus 1 LSB.

The analog input channel is selected by writing to the ACS bits in DADI. Any of the eight Port 0 input pins can be selected as single-ended inputs to the ADC. Four pairs of Port 0 pins can be selected as differential inputs. The ACON bit (DADI.7) must be set to one to connect the input pins to the ADC. Prior to changing ACS, ACON must be cleared to zero. This ensures that crosstalk between channels is limited. ACON must be set back to one after ACS is updated. ACON and ACS should not be changed while a conversion is in progress. ADC input channels must have their port pins configured for input-only mode.

The ADC is enabled by setting the ADCE bit in DADC. Some settling time is required for the reference circuits to stabilize after the ADC is enabled. The ADC does not consume power when ADCE is cleared, so it is recommended to switch off the ADC before entering power saving modes.

A timing diagram of an ADC conversion is shown in Figure 20-2. The conversion requires 13 ADC clock cycles to complete. The analog input is sampled during the third cycle of the conversion and is held constant for the remainder of the conversion. At the end of the conversion, the interrupt flag, ADIF, is set and the result is written to the data registers. An additional 1 ADC clock cycle and up to 2 system clock cycles may be required to synchronize ADIF with the rest of the system. The results in DADH/DADL remain valid until the next conversion completes. DADH and DADL are read-only registers during ADC mode.

Figure 20-2. ADC Timing Diagram

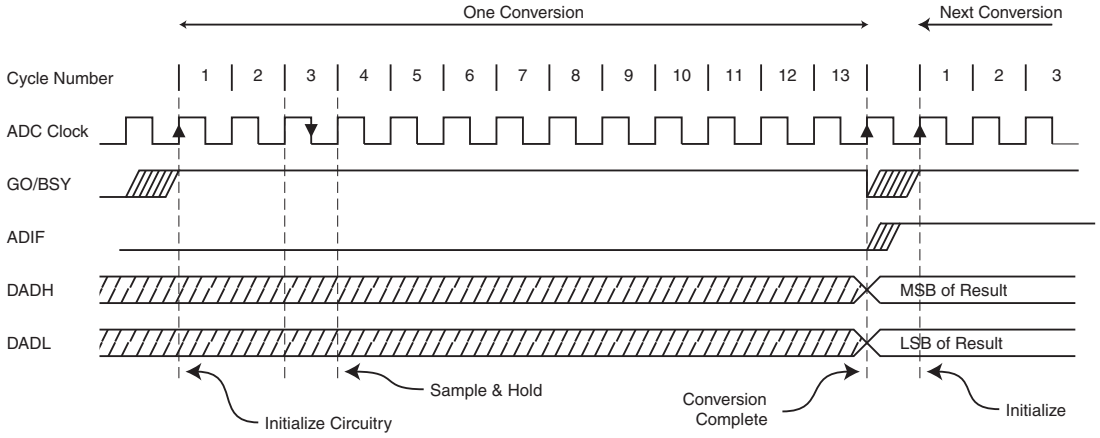

The equivalent model for the analog input circuitry is illustrated in Figure 20-3. An analog source applied to ADCn is subjected to the pin capacitance and input leakage of that pin, regardless of whether that channel is selected as input to the ADC. When the channel is selected, the source must drive the S/H capacitor through the series resistance (combined resistance in the input path). To achieve 10-bit resolution the S/H capacitor must be charged to within 1/2 LSB of the expected value within the 1 ADC clock period sample time. High impedance sources may require a reduction in the ADC clock frequency to achieve full resolution.

Figure 20-3. Equivalent Analog Input Model

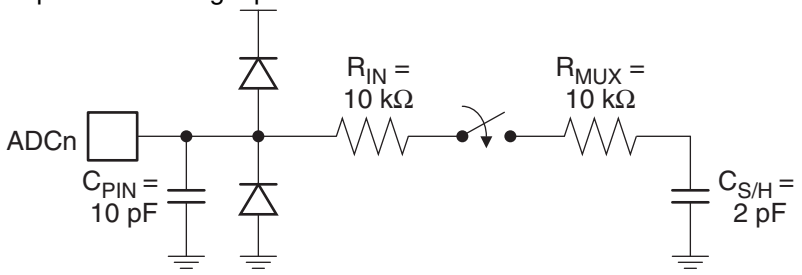

20.2 DAC Operation

The DAC converts a 10-bit signed digital value to an analog output current through successive approximation. The DAC always operates in differential mode, outputting a differential current between its positive (P2.2) and negative (P2.3) outputs with a common mode voltage of $V_{DD}/2$. The minimum value represents zero difference and the maximum values represent a difference of positive or negative V_{REF} minus 1 LSB. An external transimpedance amplifier is required to convert the current into a voltage suitable for driving other circuits.

The DAC is enabled by setting the ADCE and DAC bits in DADC. Some settling time is required for the reference circuits to stabilize after the DAC is enabled. The DAC does not have multiple output channels and the DIFF, ACON and ACS bits have no effect in DAC mode. P2.2 and P2.3 are automatically forced to input-only mode while the DAC is enabled.

A timing diagram of a DAC conversion is shown in Figure 20-4. The conversion requires 11 ADC clock cycles to complete. Construction of the analog output starts in the second cycle of the conversion and the DAC will allow the new value to propagate to the outputs during cycle 7, after the 5 MSBs are complete. At the end of the conversion, the interrupt flag is set. An additional 1 ADC clock cycle and up to 2 system clock cycles may be required to synchronize ADIF with the rest of the system. The DADL and DADH registers hold the value to be output and are write-only during DAC mode. An internal buffer samples DADH/DADL at the start of the conversion and holds the value constant for the remainder of the conversion. One system clock cycle is required to transfer the contents of DADH/DADL into the buffer at the start of the conversion and therefore the ADC clock frequency must always be equal to or less than the system clock frequency during DAC mode to ensure that the buffer is updated before the second cycle.

Figure 20-4. DAC Timing Diagram

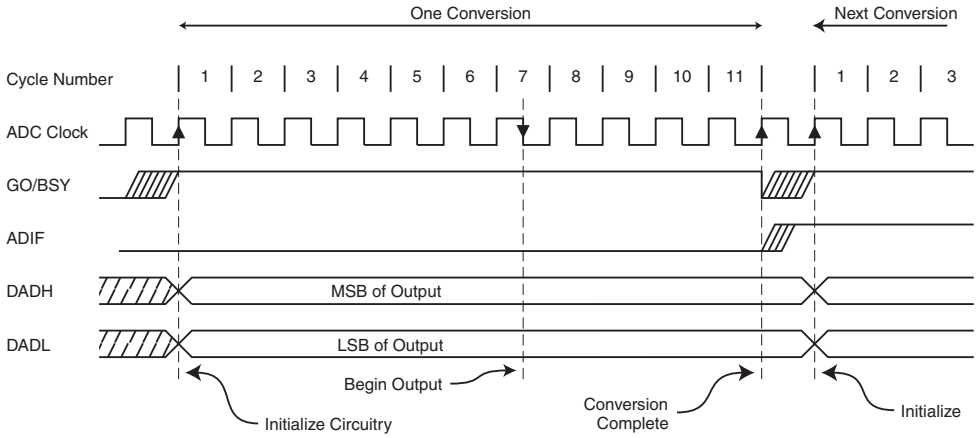

The equivalent model for the analog output circuitry is illustrated in Figure 20-5. The series output resistance of the DAC must drive the pin capacitance and any external load on the pin.

Figure 20-5. Equivalent Analog Output Model

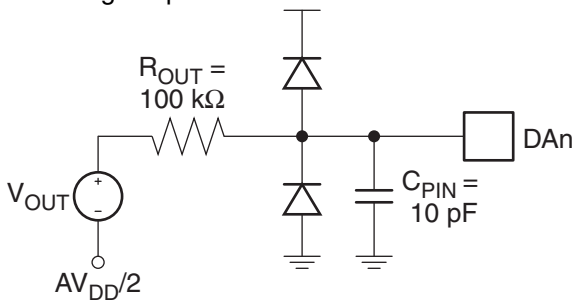

20.3 Clock Selection

The DADC requires a clock of 2 MHz or less to achieve full resolution. By default the DADC will use an internal 2 MHz clock generated from the 8 MHz internal oscillator. The internal oscillator will be enabled even if it is not supplying the system clock. This may result in higher power consumption. Conversely, the DADC clock can be generated directly from the system clock using a 7-bit prescaler. The prescaler output is controlled by the ACK bits in DADC as shown in Figure 20-6.

In ADC mode, there are no requirements on the clock frequency with respect to the system clock. The ADC prescaler selection is independent of the system clock divider and the ADC may operate at both higher or lower frequencies than the CPU. However, in DAC mode the ADC clock frequency must not be higher than the CPU clock, including any clock division from the system clock.

Figure 20-6. DADC Clock Selection

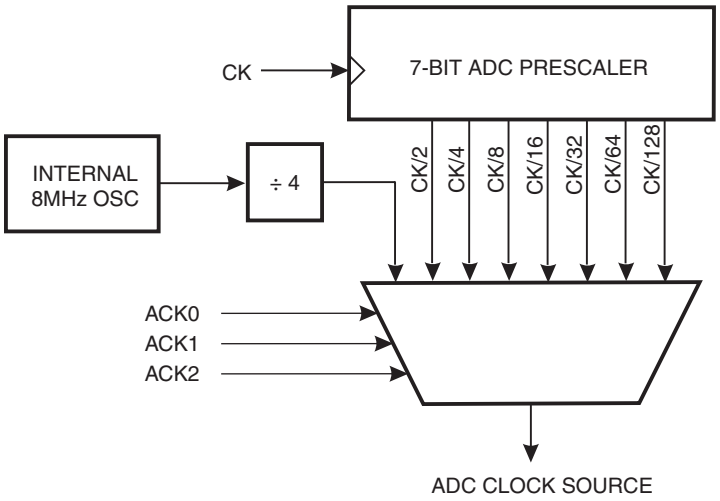

20.4 Starting a Conversion

Setting the GO/BSY bit (DADC.6) when ADCE = 1 starts a single conversion in both ADC and DAC modes. The bit remains set while the conversion is in progress and is cleared by hardware when the conversion completes. The ADC channel should not be changed while a conversion is in progress.

Alternatively, a conversion can be started automatically by various timer sources. Conversion trigger sources are selected by the TRG bits in DADI. A conversion is started every time the selected timer overflows, allowing for conversions to occur at fixed intervals. The GO/BSY bit will

be set by hardware while the conversion is in progress. Note that the timer overflow rate must be slower than the conversion time.

20.5 Noise Considerations

Digital circuitry inside and outside the device generates EMI which might affect the accuracy of analog measurements. If conversion accuracy is critical, the noise level can be reduced by applying the following techniques:

- Connect a decoupling capacitor between the V_{DD} pin and GND as shown in Figure 20-7. This capacitor should be located as close to the package as possible.
- Keep analog signal paths as short as possible. Make sure to run analog signals tracks over an analog ground plane, and keep them well away from high-speed digital tracks.
- Place the CPU in Idle during a conversion.
- If any Port 0 pins are used as digital outputs, it is essential that these do not switch while a conversion is in progress.

Figure 20-7. Example ADC Power Connections (TQFP Package)

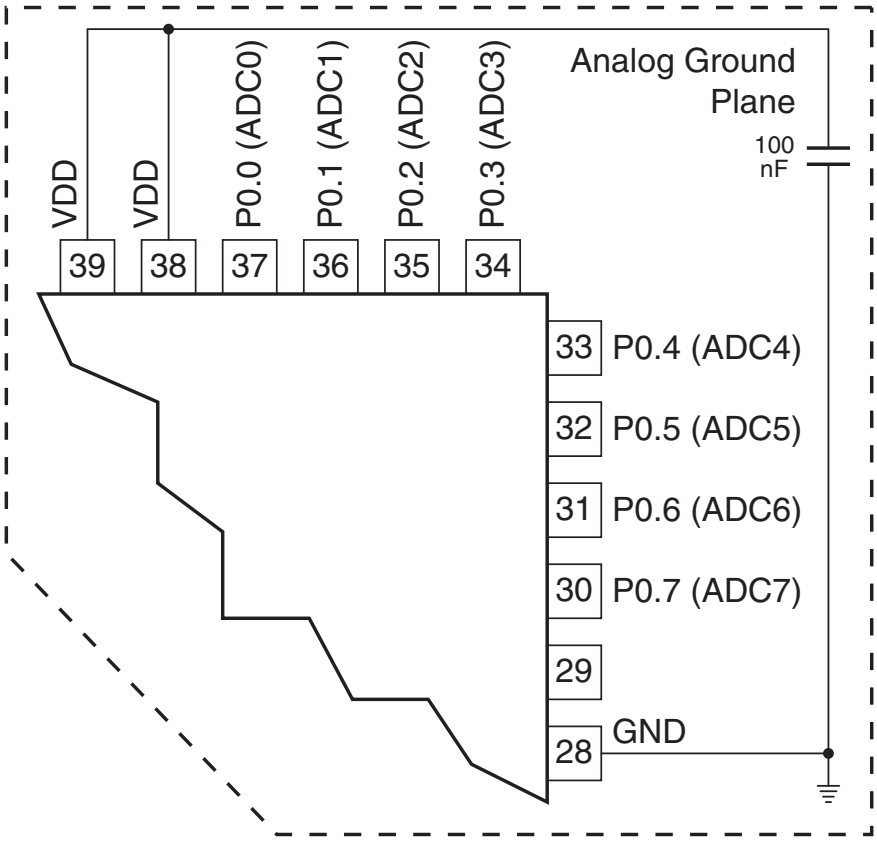

Table 20-2. DADC – DADC Control Register

DADC = D9H — Reset Value = 0000 0000B

Not Bit Addressable

	ADIF	GO/BSY	DAC	ADCE	LADJ	ACK2	ACK1	ACK0
Bit	7	6	5	4	3	2	1	0

Symbol	Function
ADIF	ADC Interrupt Flag. Set by hardware when a conversion completes. Cleared by hardware when calling the interrupt service routine.
GO/BSY	Conversion Start/Busy Flag. In software triggered mode, writing a 1 to this bit starts a conversion. The bit remains high while the conversion is in progress and is cleared by hardware when the conversion completes. In hardware triggered mode, this bit is set and cleared by hardware to flag when the DADC is busy.
DAC	Digital-to-Analog Conversion Enable. Set to configure the DADC in Digital-to-Analog (DAC) mode. Clear to configure the DADC in Analog-to-Digital (ADC) mode.
ADCE	DADC Enable. Set to enable the DADC. Clear to disable the DADC.
LADJ	Left Adjust Enable. When cleared, the ADC results are right adjusted and the MSBs are sign extended. When set, the ADC results are left adjusted and the LSBs are zeroed.
ACK [2-0]	DADC Clock Select

ACK3	ACK1	ACK0	Clock Source
0	0	0	Internal RC Oscillator/4 (2MHz)
0	0	1	$f_{sys}/2$
0	1	0	$f_{sys}/4$
0	1	1	$f_{sys}/8$
1	0	0	$f_{sys}/16$
1	0	1	$f_{sys}/32$
1	1	0	$f_{sys}/64$
1	1	1	$f_{sys}/128$

Table 20-3. DADL – DADC Data Low Register

DADL = DCH — Reset Value = 0000 0000B

Not Bit Addressable

	ADC.7	ADC.6	ADC.5	ADC.4	ADC.3	ADC.2	ADC.1	ADC.0
Bit	7	6	5	4	3	2	1	0

Table 20-4. DADH – DADC Data High Register

DADH = DDH — Reset Value = 0000 0000B

Not Bit Addressable

	ADC.15	ADC.14	ADC.13	ADC.12	ADC.11	ADC.10	ADC.9	ADC.8
Bit	7	6	5	4	3	2	1	0

Table 20-5. DADI – DADC Input Control Register

DADI = DAH — Reset Value = 0000 0000B

Not Bit Addressable

	ACON	IREF	TRG1	TRG0	DIFF	ACS2	ACS1	ACS0
Bit	7	6	5	4	3	2	1	0

Symbol	Function
ACON	Analog Input Connect. When cleared, the analog inputs are disconnected from the ADC. When set, the analog inputs selected by ACS_{2-0} are connected to the ADC. ACON must be zero when changing the input channel multiplexor (ACS_{2-0}).
IREF	Internal Reference Enable. When set, the DADC uses the internal voltage reference. When cleared the DADC uses VDD for its reference.
DIFF	Differential Mode Enable. Set to configure the ADC in differential mode. Clear to configure the ADC in single-ended mode.
TRG[1-0]	Trigger Select.

TRG1	TRG0	Trigger
0	0	Software (GO bit)
0	1	Timer 0 Overflow
1	0	Timer 1 Overflow
1	1	Timer 2 Overflow

ACS [2-0] DADC Channel Select

DIFF	ACS2	ACS1	ACS0	V+	V-
0	0	0	0	P0.0	VDD/2
0	0	0	1	P0.1	VDD/2
0	0	1	0	P0.2	VDD/2
0	0	1	1	P0.3	VDD/2
0	1	0	0	P0.4	VDD/2
0	1	0	1	P0.5	VDD/2
0	1	1	0	P0.6	VDD/2
0	1	1	1	P0.7	VDD/2
1	0	0	0	P0.0	P0.1
1	0	0	1	P0.2	P0.3
1	0	1	0	P0.4	P0.5
1	0	1	1	P0.6	P0.7
1	1	0	0	reserved	
1	1	0	1	reserved	
1	1	1	0	reserved	
1	1	1	1	reserved	

21. Programmable Watchdog Timer

The programmable Watchdog Timer (WDT) protects the system from incorrect execution by triggering a system reset when it times out after the software has failed to feed the timer prior to the timer overflow. By Default the WDT counts CPU clock cycles. The prescaler bits, PS0, PS1 and PS2 in SFR WDTCON are used to set the period of the Watchdog Timer from 16K to 2048K clock cycles. The Timer Prescaler can also be used to lengthen the time-out period (see Table 6-2 on page 33) The WDT is disabled by Reset and during Power-down mode. When the WDT times out without being serviced, an internal RST pulse is generated to reset the CPU. See Table 21-1 for the available WDT period selections.

Table 21-1. Watchdog Timer Time-out Period Selection

WDT Prescaler Bits			Period[1] (Clock Cycles)
PS2	PS1	PS0	
0	0	0	16K
0	0	1	32K
0	1	0	64K
0	1	1	128K
1	0	0	256K
1	0	1	512K
1	1	0	1024K
1	1	1	2048K

Note: 1. The WDT time-out period is dependent on the system clock frequency.

$$\text{Time-out Period} = \frac{2^{(PS+14)}}{\text{Oscillator Frequency}} \times (TPS+1)$$

The Watchdog Timer consists of a 14-bit timer with 7-bit programmable prescaler. Writing the sequence 1EH/E1H to the WDTRST register enables the timer. When the WDT is enabled, the WDTEN bit in WDTCON will be set to “1”. To prevent the WDT from generating a reset when if overflows, the watchdog feed sequence must be written to WDTRST before the end of the time-out period. To feed the watchdog, two write instructions must be sequentially executed successfully. Between the two write instructions, SFR reads are allowed, but writes are not allowed. The instructions should move 1EH to the WDTRST register and then 1EH to the WDTRST register. An incorrect feed or enable sequence will cause an immediate watchdog reset. The program sequence to feed or enable the watchdog timer is as follows:

```
MOV WDTRST, #01Eh
MOV WDTRST, #0E1h
```

21.1 Software Reset

A Software Reset of the AT89LP3240/6440 is accomplished by writing the software reset sequence 5AH/A5H to the WDTRST SFR. The WDT does not need to be enabled to generate the software reset. A normal software reset will set the SWRST flag in WDTCON. However, if at any time an incorrect sequence is written to WDTRST (i.e. anything other than 1EH/E1H or 5AH/A5H), a software reset will immediately be generated and both the SWRST and WDTOVF flags will be set. In this manner an intentional software reset may be distinguished from a software error-generated reset. The program sequence to generate a software reset is as follows:

```
MOV WDTRST, #05Ah
MOV WDTRST, #0A5h
```

Table 21-2. WDTCON – Watchdog Control Register

WDTCON Address = A7H — Reset Value = 0000 X000B

Not Bit Addressable

	PS2	PS1	PS0	WDIDLE	–	SWRST	WDTOVF	WDTEN
Bit	7	6	5	4	3	2	1	0

Symbol	Function
PS2 PS1 PS0	Prescaler bits for the watchdog timer (WDT). When all three bits are cleared to 0, the watchdog timer has a nominal period of 16K clock cycles. When all three bits are set to 1, the nominal period is 2048K clock cycles.
WDIDLE	Disable/enable the Watchdog Timer in IDLE mode. When WDIDLE = 0, WDT continues to count in IDLE mode. When WDIDLE = 1, WDT freezes while the device is in IDLE mode.
SWRST	Software Reset Flag. Set when a software reset is generated by writing the sequence 5AH/A5H to WDTRST. Also set when an incorrect sequence is written to WDTRST. Must be cleared by software.
WDTOVF	Watchdog Overflow Flag. Set when a WDT rest is generated by the WDT timer overflow. Also set when an incorrect sequence is written to WDTRST. Must be cleared by software.
WDTEN	Watchdog Enable Flag. This bit is READ-ONLY and reflects the status of the WDT (whether it is running or not). The WDT is disabled after any reset and must be re-enabled by writing 1EH/E1H to WDTRST

Table 21-3. WDTRST – Watchdog Reset Register

WDTCON Address = A6H — **(Write-Only)**

Not Bit Addressable

	–	–	–	–	–	–	–	–
Bit	7	6	5	4	3	2	1	0

The WDT is enabled by writing the sequence 1EH/E1H to the WDTRST SFR. The current status may be checked by reading the WDTEN bit in WDTCON. To prevent the WDT from resetting the device, the same sequence 1EH/E1H must be written to WDTRST before the time-out interval expires. A software reset is generated by writing the sequence 5AH/A5H to WDTRST.

22. Instruction Set Summary

The AT89LP3240/6440 is fully binary compatible with the 8051 instruction set. The difference between the AT89LP3240/6440 and the standard 8051 is the number of cycles required to execute an instruction. Instructions in the AT89LP3240/6440 may take 1 to 9 clock cycles to complete. The execution times of most instructions may be computed using Table 22-1.

Table 22-1. Instruction Execution Times and Exceptions

Generic Instruction Types	Cycle Count Formula
Most arithmetic, logical, bit and transfer instructions	# bytes
Branches and Calls	# bytes + 1
Single Byte Indirect (i.e. ADD A, @Ri, etc.)	2
RET, RETI	4/5[(4)]
MOVC	3
MOVX	2/4[(2)]
MUL	2
DIV	4
MAC	9
INC DPTR	2

Arithmetic	Bytes	Clock Cycles		Hex Code
		8051	AT89LP	
ADD A, Rn	1	12	1	28-2F
ADD A, direct	2	12	2	25
ADD A, @Ri	1	12	2	26-27
ADD A, #data	2	12	2	24
ADDC A, Rn	1	12	1	38-3F
ADDC A, direct	2	12	2	35
ADDC A, @Ri	1	12	2	36-37
ADDC A, #data	2	12	2	34
SUBB A, Rn	1	12	1	98-9F
SUBB A, direct	2	12	2	95
SUBB A, @Ri	1	12	2	96-97
SUBB A, #data	2	12	2	94
INC Rn	1	12	1	08-0F
INC direct	2	12	2	05
INC @Ri	1	12	2	06-07
INC A	2	12	2	04
DEC Rn	1	12	1	18-1F
DEC direct	2	12	2	15
DEC @Ri	1	12	2	16-17
DEC A	2	12	2	14
INC DPTR	1	24	2	A3

Table 22-1. Instruction Execution Times and Exceptions (Continued)

INC /DPTR[1]	2	–	3	A5 A3
MUL AB	1	48	2	A4
DIV AB	1	48	4	84
DA A	1	12	1	D4
MAC AB[1]	2	–	9	A5 A4
CLR M[1]	2	–	2	A5 E4
ASR M[1]	2	–	2	A5 03
LSL M[1]	2	–	2	A5 23
		Clock Cycles		
Bit Operations	**Bytes**	**8051**	**AT89LP**	**Hex Code**
CLR C	1	12	1	C3
CLR bit	2	12	2	C2
SETB C	1	12	1	D3
SETB bit	2	12	2	D2
CPL C	1	12	1	B3
CPL bit	2	12	2	B2
ANL C, bit	2	24	2	82
ANL C, bit	2	24	2	B0
ORL C, bit	2	24	2	72
ORL C, /bit	2	24	2	A0
MOV C, bit	2	12	2	A2
MOV bit, C	2	24	2	92
		Clock Cycles		
Logical	**Bytes**	**8051**	**AT89LP**	**Hex Code**
CLR A	1	12	1	E4
CPL A	1	12	1	F4
ANL A, Rn	1	12	1	58-5F
ANL A, direct	2	12	2	55
ANL A, @Ri	1	12	2	56-57
ANL A, #data	2	12	2	54
ANL direct, A	2	12	2	52
ANL direct, #data	3	24	3	53
ORL A, Rn	1	12	1	48-4F
ORL A, direct	2	12	2	45
ORL A, @Ri	1	12	2	46-47
ORL A, #data	2	12	2	44
ORL direct, A	2	12	2	42
ORL direct, #data	3	24	3	43
XRL A, Rn	1	12	1	68-6F

Table 22-1. Instruction Execution Times and Exceptions (Continued)

XRL A, direct	2	12	2	65
XRL A, @Ri	1	12	2	66-67
XRL A, #data	2	12	2	64
XRL direct, A	2	12	2	62
XRL direct, #data	3	24	3	63
RL A	1	12	1	23
RLC A	1	12	1	33
RR A	1	12	1	03
RRC A	1	12	1	13
SWAP A	1	12	1	C4
		Clock Cycles		
Data Transfer	**Bytes**	**8051**	**AT89LP**	**Hex Code**
MOV A, Rn	1	12	1	E8-EF
MOV A, direct	2	12	2	E5
MOV A, @Ri	1	12	2	E6-E7
MOV A, #data	2	12	2	74
MOV Rn, A	1	12	1	F8-FF
MOV Rn, direct	2	24	2	A8-AF
MOV Rn, #data	2	12	2	78-7F
MOV direct, A	2	12	2	F5
MOV direct, Rn	2	24	2	88-8F
MOV direct, direct	3	24	3	85
MOV direct, @Ri	2	24	2	86-87
MOV direct, #data	3	24	3	75
MOV @Ri, A	1	12	1	F6-F7
MOV @Ri, direct	2	24	2	A6-A7
MOV @Ri, #data	2	12	2	76-77
MOV DPTR, #data16	3	24	3	90
MOV /DPTR, #data16[(1)]	4	–	4	A5 90
MOVC A, @A+DPTR	1	24	3	93
MOVC A, @A+/DPTR[(1)]	2	–	4	A5 93
MOVC A, @A+PC	1	24	3	83
MOVX A, @Ri	1	24	2	E2-E3
MOVX A, @DPTR	1	24	2/4[(2)]	E0
MOVX A, @/DPTR[(1)]	2	–	3/5[(2)]	A5 E0
MOVX @Ri, A	1	24	2	F2-F3
MOVX @DPTR, A	1	24	2/4[(2)]	F0
MOVX @/DPTR, A[(1)]	2	–	3/5[(2)]	A5 F0
PUSH direct	2	24	2/3[(4)]	C0

Table 22-1. Instruction Execution Times and Exceptions (Continued)

POP direct	2	24	2/3[4]	D0
XCH A, Rn	1	12	1	C8-CF
XCH A, direct	2	12	2	C5
XCH A, @Ri	1	12	2	C6-C7
XCHD A, @Ri	1	12	2	D6-D7
		Clock Cycles		
Branching	**Bytes**	**8051**	**AT89LP**	**Hex Code**
JC rel	2	24	3	40
JNC rel	2	24	3	50
JB bit, rel	3	24	4	20
JNB bit, rel	3	24	4	30
JBC bit, rel	3	24	4	10
JZ rel	2	24	3	60
JNZ rel	2	24	3	70
SJMP rel	2	24	3	80
ACALL addr11	2	24	3/5[4]	11,31,51,71,91, B1,D1,F1
LCALL addr16	3	24	4/6[4]	12
RET	1	24	4/5[4]	22
RETI	1	24	4/5[4]	32
AJMP addr11	2	24	3	01,21,41,61,81, A1,C1,E1
LJMP addr16	3	24	4	02
JMP @A+DPTR	1	24	2	73
JMP @A+PC[1]	2	–	3	A5 73
CJNE A, direct, rel	3	24	4	B5
CJNE A, #data, rel	3	24	4	B4
CJNE Rn, #data, rel	3	24	4	B8-BF
CJNE @Ri, #data, rel	3	24	4	B6-B7
CJNE A, @R0, rel[1]	3	–	4	A5 B6
CJNE A, @R1, rel[1]	3	–	4	A5 B7
DJNZ Rn, rel	2	24	3	D8-DF
DJNZ direct, rel	3	24	4	D5
NOP	1	12	1	00
BREAK[1][3]	2	–	2	A5 00

Notes:
1. This escaped instruction is an extension to the instruction set. See Section 22.1 on page 147.
2. MOVX @DPTR instructions take 2 clock cycles when accessing ERAM and 4 clock cycles when accessing FDATA, XDATA or CODE. (3 and 5 cycles for MOVX @/DPTR).
3. The BREAK instruction acts as a 2 cycle NOP.
4. Instructions accessing the stack require additional cycles when using the extended stack.

22.1 Instruction Set Extensions

The following instructions are extensions to the standard 8051 instruction set that provide enhanced capabilities not found in standard 8051 devices. All extended instructions start with an A5H escape code. For this reason random A5H reserved codes should not be placed in the instruction stream even though other devices may have treated these as NOPs.

Other AT89LP devices may not support all of these instructions.

22.1.1 ASR M

Function: Shift MAC Accumulator Right Arithmetically

Description: The forty bits in the M register are shifted one bit to the right. Bit 39 retains its value to preserve the sign of the value. No flags are affected.

Example: The M register holds the value 0C5B1A29384H . The following instruction,

ASR M

leaves the M register holding the value 0E2D8D149C2H.

Bytes: 2

Cycles: 2

Encoding:

A5	0	0	0	0	0	0	1	1

Operation: ASR
$(M_n) \leftarrow (M_{n+1})$ n = 0 - 38
$(M_{39}) \leftarrow (M_{39})$

22.1.2 BREAK

Function: Software Breakpoint (Halt execution)

Description: BREAK transfers control from normal execution to the On-Chip Debug (OCD) handler if OCD is enabled. The PC is left pointing to the following instruction. If OCD is disabled, BREAK acts as a double NOP. No flags are affected.

Example: If On-Chip Debugging is allowed, the following instruction,

BREAK

will halt instruction execution prior to the immediately following instruction. If debugging is not allowed, the BREAK is treated as a double NOP.

Bytes: 2

Cycles: 2

Encoding:

A5	0	0	0	0	0	0	0	0

Operation: BREAK
(PC) ←(PC) + 2

22.1.3 CJNE A, @R_i, rel

Function: Compare and Jump if Not Equal

Description: CJNE compares the magnitudes of the Accumulator and indirect RAM location and branches if their values are not equal. The branch destination is computed by adding the signed relative-displacement in the last instruction byte to the PC, after incrementing the PC to the start of the next instruction. The carry flag is set if the unsigned integer value of ACC is less than the unsigned integer value of the indirect location; otherwise, the carry is cleared. Neither operand is affected.

Example: The Accumulator contains 34H. Register 0 contains 78H and 78H contains 56H. The first instruction in the sequence,

```
      CJNE    A, @R0, NOT_EQ
;           . . . . . .    ..... ..... ; ACC = @R0.
NOT_EQ:
        JC      REQ_LOW .. ;IF ACC< @R0.
;           . . . . . .    ..... ..... ;ACC > @R0.
```

sets the carry flag and branches to the instruction at label NOT_EQ. By testing the carry flag, the second instruction determines whether ACC is greater or less than the location pointed to by R0.

Bytes: 2

Cycles: 9

Encoding:

A5	1	0	1	1	0	1	1	i	rel. address

Operation: CJNE
(PC) ← (PC) + 3
IF (A) ≠ ((R$_i$))
THEN
    (PC) ← (PC) + relative offset
IF (A) < ((R$_i$))
THEN
    (C) ← 1
ELSE
    (C) ← 0

22.1.4 CLR M

Function: Clear MAC Accumulator

Description: CLR M clears the 40-bit M register. No flags are affected.

Example: The M registercontains 123456789AH. The following instruction,

CLR M

leaves the M register set to 0000000000H.

Bytes: 2

Cycles: 2

Encoding:

A5	1	1	1	0	0	1	0	0

Operation: JMP
(M) ←0

22.1.5 INC /DPTR

Function: Increment Alternate Data Pointer

Description: INC /DPTR increments the unselected 16-bit data pointer by 1. A 16-bit increment (modulo 2^{16}) is performed, and an overflow of the low-order byte of the data pointer from 0FFH to 00H increments the high-order byte. No flags are affected.

Example: Registers DP1H and DP1L contain 12H and 0FEH, respectively, and DPS = 0. The following instruction sequence,

```
INC     /DPTR
INC     /DPTR
INC     /DPTR
```

changes DP1H and DP1L to 13H and 01H.

Bytes: 2

Cycles: 3

Encoding:

A5	1	0	1	0	0	0	1	1

Operation:

```
INC
IF (DPS) = 0
THEN
    (DPTR1) ← (DPTR1) + 1
ELSE
    (DPTR0) ← (DPTR0) + 1
```

22.1.6 JMP @A+PC

Function: Jump indirect relative to PC

Description: JMP @A+PC adds the eight-bit unsigned contents of the Accumulator to the program counter, which is first incremented by two. This is the address for subsequent instruction fetches. Sixteen-bit addition is performed (modulo 2^{16}): a carry-out from the low-order eight bits propagates through the higher-order bits. The Accumulator is not altered. No flags are affected.

Example: An even number from 0 to 6 is in the Accumulator. The following sequence of instructions branches to one of four AJMP instructions in a jump table starting at JMP_TBL.

```
        JMP    @A + PC
JMP_TBL:
        AJMP   LABEL0
        AJMP   LABEL1
        AJMP   LABEL2
        AJMP   LABEL3
```

If the Accumulator equals 04H when starting this sequence, execution jumps to label LABEL2. Because AJMP is a 2-byte instruction, the jump instructions start at every other address.

Bytes: 2

Cycles: 3

Encoding:

A5	0	1	1	1	0	0	1	1

Operation:

```
JMP
(PC) ←(A) + (PC) + 2
```

22.1.7 LSL M

Function: Shift MAC Accumulator Left Logically

Description: The forty bits in the M register are shifted one bit to the left. Bit 0 is cleared. No flags are affected.

Example: The M register holds the value 0C5B1A29384H. The following instruction,

```
LSL   M
```

leaves the M register holding the value 8B63452708H.

Bytes: 2

Cycles: 2

Encoding:

A5	0	0	1	0	0	0	1	1

Operation: LSL
$(M_{n+1}) \leftarrow (M_n)$ n = 0 - 38
$(M_0) \leftarrow 0$

22.1.8 MOVC A, @A+/DPTR

Function: Move code byte relative to Alternate Data Pointer

Description: The MOVC instructions load the Accumulator with a code byte or constant from program memory. The address of the byte fetched is the sum of the original unsigned 8-bit Accumulator contents and the contents of the unselected Data Pointer. The base register is not altered. Sixteen-bit addition is performed so a carry-out from the low-order eight bits may propagate through higher-order bits. No flags are affected.

Example: A value between 0 and 3 is in the Accumulator. The following instructions will translate the value in the Accumulator to one of four values defined by the DB (define byte) directive.

```
    MOV     /DPTR, #TABLE
    MOVC    A, @A+PC
    RET

TABLE:
    DB      66H
    DB      77H
    DB      88H
    DB      99H
```

If the subroutine is called with the Accumulator equal to 01H, it returns with 77H in the Accumulator.

Bytes: 2

Cycles: 4

Encoding:

A5	1	0	0	1	0	0	1	1

Operation: MOVC
IF (DPS) = 0
THEN
    (A) ←((A) + (DPTR1))
ELSE
    (A) ←((A) + (DPTR0))

22.1.9 MAC AB

Function: Multiply and Accumulate

Description: MAC AB multiplies the signed 16-bit integers in the register pairs {AX, A} and {BX, B} and adds the 32-bit product to the 40-bit M register. The low-order bytes of the 16-bit operands are stored in A and B, and the high-order bytes in AX and BX respectively. The four operand registers are unaffected by the operation. If the addition of the product to the accumulated sum in M results in a two's complement overflow, the overflow flag is set; otherwise it is not cleared. The carry flag is set if the result is negative and cleared if positive.

Example: Originally the Accumulator holds the value 80 (50H). Register B holds the value 160 (0A0H). The instruction,

```
MAC   AB
```

will give the product 12, 800 (3200H), so B is changed to 32H (00110010B) and the Accumulator is cleared. The overflow flag is set, carry is cleared.

Bytes: 2

Cycles: 9

Encoding:

A5	1	0	1	0	0	1	0	0

Operation: MAC
$(M_{39\text{-}0}) \leftarrow (M) + \{ (AX), (A) \} X \{ (BX), (B) \}$

22.1.10 MOV /DPTR, #data16

Function: Load Alternate Data Pointer with a 16-bit constant

Description: MOV /DPTR, #data16 loads the unselected Data Pointer with the 16-bit constant indicated. The third byte is the high-order byte, while the fourth byte holds the lower-order byte. No flags are affected.

Example: When DPS = 0, the instruction sequence,

```
MOV    DPTR, # 1234H
MOV   /DPTR, # 5678H
```

loads the value 1234H into the first Data Pointer: DPH0 holds 12H and DPL0 holds 34H; and loads the value 5678H into the second Data Pointer: DPH1 hold 56H and DPL1 holds 78H.

Bytes: 2

Cycles: 3

Encoding:

A5	90	immed. data 15-8	immed. data 7-0

Operation: MOV
IF (DPS) = 0
THEN
    (DP1H) $\leftarrow$ #data$_{15\text{-}8}$
    (DP1L) $\leftarrow$ #data$_{7\text{-}0}$
ELSE
    (DP0H) $\leftarrow$ #data$_{15\text{-}8}$
    (DP0L) $\leftarrow$ #data$_{7\text{-}0}$

22.1.11 MOVX A, @/DPTR

Function: Move External using Alternate Data Pointer

Description: The MOVX instruction transfesr data from external data memory to the Accumulator. The unselected Data Pointer generates a 16-bit address which targets EDATA, FDATA or XDATA.

Example: DPS = 0, DPTR0 contains 0123H and DPTR1 contains 4567H. The following instruction sequence,

```
MOVX    A, @DPTR
MOVX    @/DPTR, A
```

copies the data from address 0123H to 4567H.

Bytes: 2

Cycles: 3 (EDATA)
5 (FDATA or XDATA)

Encoding:

A5	1	1	1	0	0	0	0	0

Operation:
MOVX
IF (DPS) = 0
    (A) ← ((DPTR1))
ELSE
    (A) ← ((DPTR0))

22.1.12 MOVX @/DPTR, A

Function: Move External using Alternate Data Pointer

Description: The MOVX instruction transfesr data from the Accumulator to external data memory. The unselected Data Pointer generates a 16-bit address which targets EDATA, FDATA or XDATA.

Example: DPS = 0, DPTR0 contains 0123H and DPTR1 contains 4567H. The following instruction sequence,

```
MOVX    A, @DPTR
MOVX    @/DPTR, A
```

copies the data from address 0123H to 4567H.

Bytes: 2

Cycles: 3 (EDATA)
5 (FDATA or XDATA)

Encoding:

A5	1	1	1	1	0	0	0	0

Operation:
MOVX
IF (DPS) = 0
THEN
    ((DPTR1)) ← (A)
ELSE
    ((DPTR0)) ← (A)

23. Register Index

Table 23-1. Special Function Register Cross Reference

Name	Address	Description Index
ACC	E0H	
ACSRA	97H	Table 19-1 on page 130
ACSRB	9FH	Table 19-2 on page 131
AREF	AFH	Table 19-3 on page 132
AUXR	8EH	Table 3-4 on page 18
AX	E1H	Section 5.1 on page 24
B	F0H	
BX	F7H	Section 5.1 on page 24
CLKREG	8FH	Table 6-2 on page 33
DADC	D9H	Table 20-2 on page 139
DADH	DDH	Table 20-4 on page 139
DADI	DAH	Table 20-3 on page 139
DADL	DCH	Table 20-3 on page 139
DPCF (AUXR1)	A2H	Table 5-5 on page 28
DPH0	83H	Section 5.2 on page 25
DPH1	85H	Section 5.2 on page 25
DPL0	82H	Section 5.2 on page 25
DPL1	83H	Section 5.2 on page 25
DSPR	E2H	Table 5-1 on page 26
FIRD	E3H	Section 5.2.2.3 on page 29
GPIEN	9CH	Table 15-3 on page 84
GPIF	9DH	Table 15-4 on page 84
GPLS	9BH	Table 15-2 on page 84
GPMOD	9AH	Table 15-1 on page 84
IE	A8H	Table 9-2 on page 42
IE2	B4H	Table 9-3 on page 43
IP	B8H	Table 9-4 on page 43
IP2	B5H	Table 9-5 on page 43
IPH	B7H	Table 9-6 on page 44
IPH2	B6H	Table 9-7 on page 44
MACH	E5H	Section 5.1 on page 24
MACL	E4H	Section 5.1 on page 24
MEMCON	96H	Table 3-3 on page 17
P0	80H	Table 10-3 on page 45
P0M0	BAH	Table 10-2 and Table 10-3 on page 45
P0M1	BBH	Table 10-2 and Table 10-3 on page 45

Table 23-1. Special Function Register Cross Reference

P1	90H	Table 10-3 on page 45
P1M0	C2H	Table 10-2 and Table 10-3 on page 45
P1M1	C3H	Table 10-2 and Table 10-3 on page 45
P2	A0H	Table 10-3 on page 45
P2M0	C4H	Table 10-2 and Table 10-3 on page 45
P2M1	C5H	Table 10-2 and Table 10-3 on page 45
P3	B0H	Table 10-3 on page 45
P3M0	C6H	Table 10-2 and Table 10-3 on page 45
P3M1	C7H	Table 10-2 and Table 10-3 on page 45
P4	C0H	Table 10-3 on page 45
P4M0	BEH	Table 10-2 and Table 10-3 on page 45
P4M1	BFH	Table 10-2 and Table 10-3 on page 45
PAGE	86H	Table 3-2 on page 14
PCON	87H	Table 8-1 on page 37
PSW	D0H	
RCAP2H	CBH	Section 12.1 on page 61
RCAP2L	CAH	Section 12.1 on page 61
RH0	94H	Table 11-1 on page 51
RH1	95H	Table 11-1 on page 51
RL0	92H	Table 11-1 on page 51
RL1	93H	Table 11-1 on page 51
SADDR	A9H	Section 16.7 on page 97
SADEN	B9H	Section 16.7 on page 97
SBUF	99H	Section 16.3 on page 89
SCON	98H	Table 16-1 on page 86
SP	81H	Section 3.4 on page 20
SPCR	E9H	Table 17-2 on page 102
SPDR	EAH	Table 17-3 on page 103
SPSR	E8H	Table 17-4 on page 103
SPX	9EH	Section 3.4 on page 20
T2CCA	D1H	Table 13-1 on page 71
T2CCC	D4H	Table 13-5 on page 74
T2CCF	D5H	Table 13-4 on page 72
T2CCH	D3H	Table 13-2 on page 71
T2CCL	D2H	Table 13-3 on page 71
T2CON	C8H	Table 12-3 on page 61
T2MOD	C9H	Table 12-4 on page 61
TCON	88H	Table 11-2 on page 54
TCONB	91H	Table 11-4 on page 56

Table 23-1. Special Function Register Cross Reference

TH0	8CH	Table 11-1 on page 51
TH1	8DH	Table 11-1 on page 51
TH2	CDH	Section 12.1 on page 61
TL0	8AH	Table 11-1 on page 51
TL1	8BH	Table 11-1 on page 51
TL2	CCH	Section 12.1 on page 61
TMOD	89H	Table 11-3 on page 55
TWAR	ACH	Table 18-3 on page 112
TWBR	AEH	Table 18-5 on page 113
TWCR	AAH	Table 18-1 on page 112
TWDR	ADH	Table 18-4 on page 113
TWSR	ABH	Table 18-2 on page 112
WDTCON	A7H	Table 21-2 on page 142
WDTRST	A6H	Table 21-3 on page 142

24. On-Chip Debug System

The AT89LP3240/6440 On-Chip Debug (OCD) System uses a two-wire serial interface to control program flow; read, modify, and write the system state; and program the nonvolatile memory. The OCD System has the following features:

- Complete program flow control
- Read-Modify-Write access to all internal SFRs and data memories
- Four hardware program address breakpoints, plus four program/data address breakpoints
- Unlimited program software breakpoints using BREAK instruction
- Break on change in program memory flow
- Break on stack overflow/underflow
- Break on Watchdog overflow
- Break on reset
- Non-intrusive operation
- Programming of nonvolatile memory

24.1 Physical Interface

The On-Chip Debug System uses a two-wire synchronous serial interface to establish communication between the target device and the controlling emulator system. The OCD interface is enabled by clearing the OCD $\overline{\text{Enable}}$ Fuse. The OCD device connections are shown in Figure 24-1. When OCD is enabled, the $\overline{\text{RST}}$ port pin is configured as an input for the Debug Clock (DCL). Either the XTAL1, XTAL2 or P4.3 pin is configured as a bi-directional data line for the Debug Data (DDA) depending on the clock source selected. If the Internal RC Oscillator is selected, XTAL1 is configured as DDA (A).If the External Clock is selected, XTAL2 is configured as DDA (B). If the Crystal Oscillator is selected, P4.3 is configured as DDA (C).

When designing a system where On-Chip Debug will be used, the following observations must be considered for correct operation:

- P4.2/$\overline{RST}$ cannot be connected directly to V_{DD} and any external capacitors connected to $\overline{RST}$ must be removed.
- All external reset sources must be removed.
- If P4.3 needs to be debugged in systems using the crystal oscillator, the external clock option should be selected. The quartz crystal and any capacitors on XTAL1 or XTAL2 must be removed and an external clock signal must be driven on XTAL1. Some emulator systems may provide a user-configurable clock for this purpose.

Figure 24-1. AT89LP3240/6440 On-Chip Debug Connections

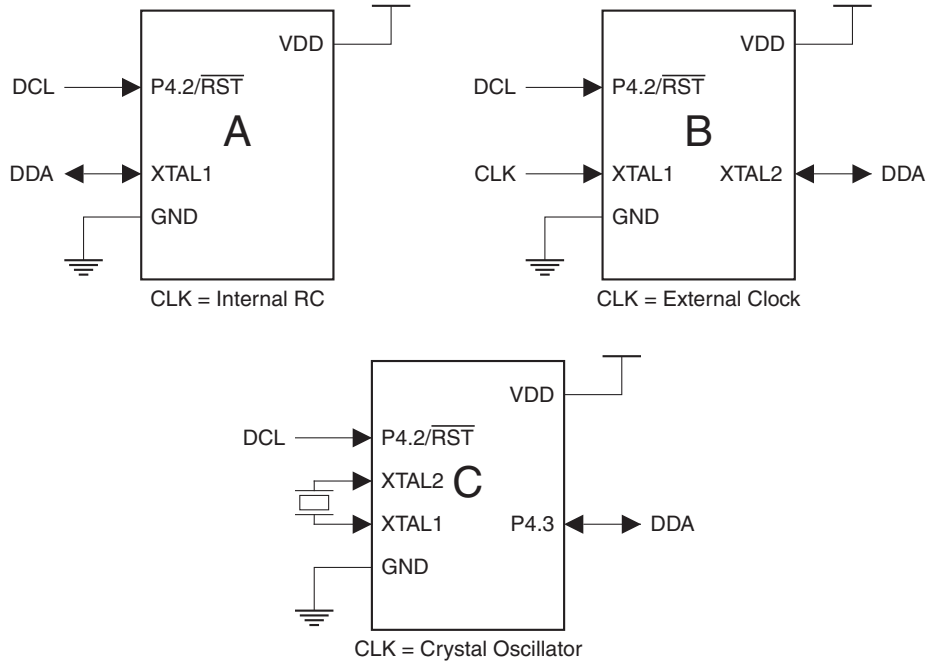

24.2 Software Breakpoints

The AT89LP3240/6440 microcontroller includes a BREAK instruction for implementing program memory breakpoints in software. A software breakpoint can be inserted manually by placing the BREAK instruction in the program code. Some emulator systems may allow for automatic insertion/deletion of software breakpoints. The Flash memory must be re-programmed each time a software breakpoint is changed. Frequent insertions/deletions of software breakpoints will reduce the endurance of the nonvolatile memory. Devices used for debugging purposes should not be shipped to end customers. The BREAK instruction is treated as a two-cycle NOP when OCD is disabled.

24.3 Limitations of On-Chip Debug

The AT89LP3240/6440 is a fully-featured microcontroller that multiplexes several functions on its limited I/O pins. Some device functionality must be sacrificed to provide resources for On-Chip Debugging. The On-Chip Debug System has the following limitations:

- The Debug Clock pin (DCL) is physically located on that same pin as Port Pin P4.2 and the External Reset ($\overline{RST}$). Therefore, neither P4.2 nor an external reset source may be emulated when OCD is enabled.

- When using the Internal RC Oscillator during debug, DDA is located on the XTAL1/P4.0 pin. The P4.0 I/O function cannot be emulated in this mode.
- When using the External Clock during debug, DDA is located on the XTAL2/P4.1 pin and the system clock drives XTAL1/P4.0. The P4.1 I/O and CLKOUT functions cannot be emulated in this mode.
- When using the Crystal Oscillator during debug, DDA is located on the P4.3 pin and the crystal connects to XTAL1/P4.0 and XTAL2/P4.1. The P4.3 I/O function cannot be emulated in this mode.

25. Programming the Flash Memory

The Atmel AT89LP3240/6440 microcontroller features 64K bytes of on-chip In-System Programmable Flash program memory and 8K bytes of nonvolatile Flash data memory. In-System Programming allows programming and reprogramming of the microcontroller positioned inside the end system. Using a simple 4-wire SPI interface, the programmer communicates serially with the AT89LP3240/6440 microcontroller, reprogramming all nonvolatile memories on the chip. In-System Programming eliminates the need for physical removal of the chips from the system. This will save time and money, both during development in the lab, and when updating the software or parameters in the field. The programming interface of the AT89LP3240/6440 includes the following features:

- Four-wire serial SPI Programming Interface or 11-pin Parallel Interface
- Active-low Reset Entry into Programming
- Slave Select allows multiple devices on same interface
- User Signature Array
- Flexible Page Programming
- Row Erase Capability
- Page Write with Auto-Erase Commands
- Programming Status Register

For more detailed information on In-System Programming, refer to the Application Note entitled “AT89LP In-System Programming Specification”.

25.1 Physical Interface

The AT89LP3240/6440 provides a standard programming command set with two physical interfaces: a bit-serial and a byte-parallel interface. Normal Flash programming utilizes the Serial Peripheral Interface (SPI) pins of an AT89LP3240/6440 microcontroller. The SPI is a full-duplex synchronous serial interface consisting of four wires: Serial Clock (SCK), Master-In/Slave-out (MISO), Master-out/Slave-in (MOSI), and an active-low chip select and frame signal ($\overline{SS}$). When programming an AT89LP3240/6440 device, the programmer always operates as the SPI master, and the target system always operates as the SPI slave. To enter or remain in Programming mode the device’s reset line ($\overline{RST}$) must be held active (low). With the addition of VDD and GND, an AT89LP3240/6440 microcontroller can be programmed with a minimum of seven connections as shown in Figure 25-1.

In addition to being a chip select, the $\overline{SS}$ pin also is used to frame a command packet. $\overline{SS}$ must go low before the start of a command and must return high to complete the command. **$\overline{SS}$ must NOT be tied to ground as this will prevent the interface from recognizing mutiple commands**. $\overline{SS}$ should be connected to the programming master for correct operation.

Figure 25-1. In-System Programming Device Connections

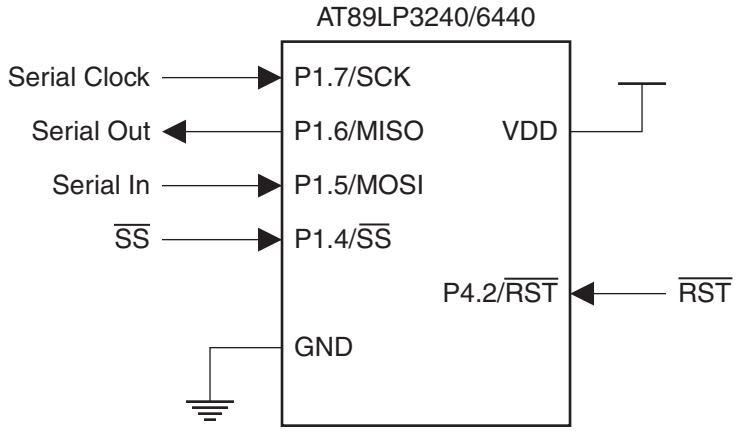

The Parallel interface is a special mode of the serial interface, i.e. the serial interface is used to enable the parallel interface. After enabling the interface serially over P1.7/SCK and P1.5/MOSI, P1.5 is reconfigured as an active-low output enable ($\overline{OE}$) for data on Port 0. When $\overline{OE}$ = 1, command, address and write data bytes are input on Port 0 and sampled at the rising edge of SCK. When $\overline{OE}$ = 0, read data bytes are output on Port 0 and should be sampled on the falling edge of SCK. The P1.7/SCK, P1.4/$\overline{SS}$ and P4.2/$\overline{RST}$ pins continue to function in the same manner. With the addition of VDD and GND, the parallel interface requires a minimum of fourteen connections as shown in Figure 25-2. Note that a connection to P1.6/MISO is not required for using the parallel interface.

Figure 25-2. Parallel Programming Device Connections

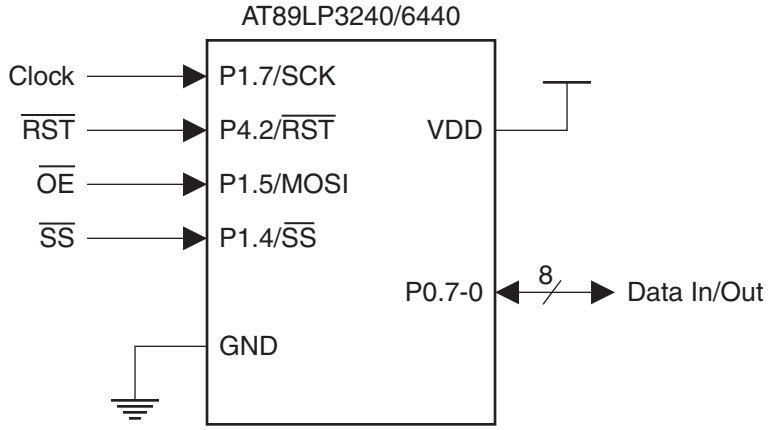

The Programming Interface is the only means of externally programming the AT89LP3240/6440 microcontroller. The Interface can be used to program the device both in-system and in a stand-alone serial programmer. The Interface does not require any clock other than SCK and is not limited by the system clock frequency. During Programming the system clock source of the target device can operate normally.

When designing a system where In-System Programming will be used, the following observations must be considered for correct operation:

- The ISP interface uses the SPI clock mode 0 (CPOL = 0, CPHA = 0) exclusively with a maximum frequency of 5 MHz.
- The AT89LP3240/6440 will enter programming mode only when its reset line ($\overline{RST}$) is active (low). To simplify this operation, it is recommended that the target reset can be controlled by the In-System programmer. To avoid problems, the In-System programmer should be able to keep the entire target system reset for the duration of the programming cycle. The target system should never attempt to drive the four SPI lines while reset is active.
- The $\overline{RST}$ input may be disabled to gain an extra I/O pin. In these cases the $\overline{RST}$ pin will always function as a reset during power up. To enter programming the $\overline{RST}$ pin must be driven low prior to the end of Power-On Reset (POR). After POR has completed the device will remain in ISP mode until $\overline{RST}$ is brought high. Once the initial ISP session has ended, the power to the target device must be cycled OFF and ON to enter another session.
- The $\overline{SS}$ pin should not be left floating during reset if ISP is enabled.
- The ISP Enable Fuse must be set to allow programming during any reset period. If the ISP Fuse is disabled, ISP may only be entered at POR.
- For standalone programmers, $\overline{RST}$ may be tied directly to GND to ensure correct entry into Programming mode regardless of the device settings.

25.2 Memory Organization

The AT89LP3240/6440 offers 64K bytes of In-System Programmable (ISP) nonvolatile Flash code memory and 8K bytes of nonvolatile Flash data memory. In addition, the device contains a 256-byte User Signature Array and a 128-byte read-only Atmel Signature Array. The memory organization is shown in Table 25-1 and Figure 25-3. The memory is divided into pages of 128 bytes each. A single read or write command may only access half a page (64 bytes) in the memory; however, write with auto-erase commands will erase an entire 128-byte page even though they can only write one half page. Each memory type resides in its own address space and is accessed by commands specific to that memory. However, all memory types share the same page size.

User configuration fuses are mapped as a row in the memory, with each byte representing one fuse. From a programming standpoint, fuses are treated the same as normal code bytes except they are not affected by Chip Erase. Fuses can be enabled at any time by writing 00h to the appropriate locations in the fuse row. However, to disable a fuse, i.e. set it to FFh, the **entire** fuse row must be erased and then reprogrammed. The programmer should read the state of all the fuses into a temporary location, modify those fuses which need to be disabled, then issue a Fuse Write with Auto-Erase command using the temporary data. Lock bits are treated in a similar manner to fuses except they may only be erased (unlocked) by Chip Erase.

Table 25-1. AT89LP3240/6440 Memory Organization

Memory	Capacity	Page Size	# Pages	Address Range
CODE	32KB (AT89LP3240)	128 bytes	256	0000H – 7FFFH
	64KB (AT89LP6440)	128 bytes	512	0000H – FFFFH
DATA	8192 bytes	128 bytes	64	1000H – 3FFFH
User Signature	256 bytes	128 bytes	2	0000H – 00FFH
Atmel Signature	128 bytes	128 bytes	1	0000H – 007FH

Figure 25-3. AT89LP6440 Memory Organization

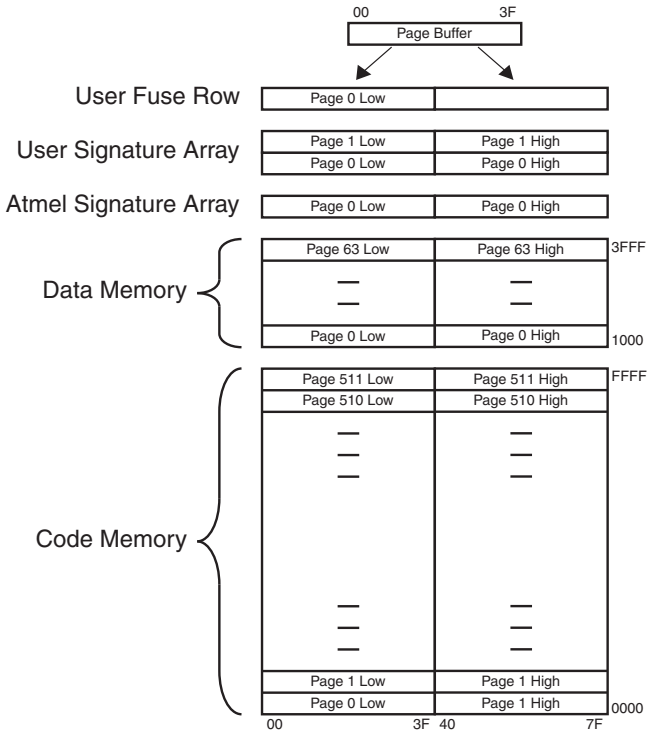

25.3 Command Format

Programming commands consist of an opcode byte, two address bytes, and zero or more data bytes. In addition, all command packets must start with a two-byte preamble of AAH and 55H. The preamble increases the noise immunity of the programming interface by making it more difficult to issue unintentional commands. Figure 25-4 on page 161 shows a simplified flow chart of a command sequence.

A sample command packet is shown in Figure 25-5 on page 161. The $\overline{SS}$ pin defines the packet frame. $\overline{SS}$ must be brought low before the first byte in a command is sent and brought back high after the final byte in the command has been sent. The command is not complete until $\overline{SS}$ returns high. Command bytes are issued serially on MOSI. Data output bytes are received serially on MISO. Packets of variable length are supported by returning $\overline{SS}$ high when the final required byte has been transmitted. In some cases command bytes have a don't care value. Don't care bytes in the middle of a packet must be transmitted. Don't care bytes at the end of a packet may be ignored.

Page oriented instructions always include a full 16-bit address. The higher order bits select the page and the lower order bits select the byte within that page. The AT89LP3240/6440 allocates 6 bits for byte address, 1 bit for low/high half page selection and 9 bits for page address. The half page to be accessed is always fixed by the page address and half select as transmitted. The byte address specifies the starting address for the first data byte. After each data byte has been transmitted, the byte address is incremented to point to the next data byte. This allows a page command to linearly sweep the bytes within a page. If the byte address is incremented past the last byte in the half page, the byte address will roll over to the first byte in the same half page. While loading bytes into the page buffer, overwriting previously loaded bytes will result in data corruption.

For a summary of available commands, see Table 25-2 on page 162.

Figure 25-4. Command Sequence Flow Chart

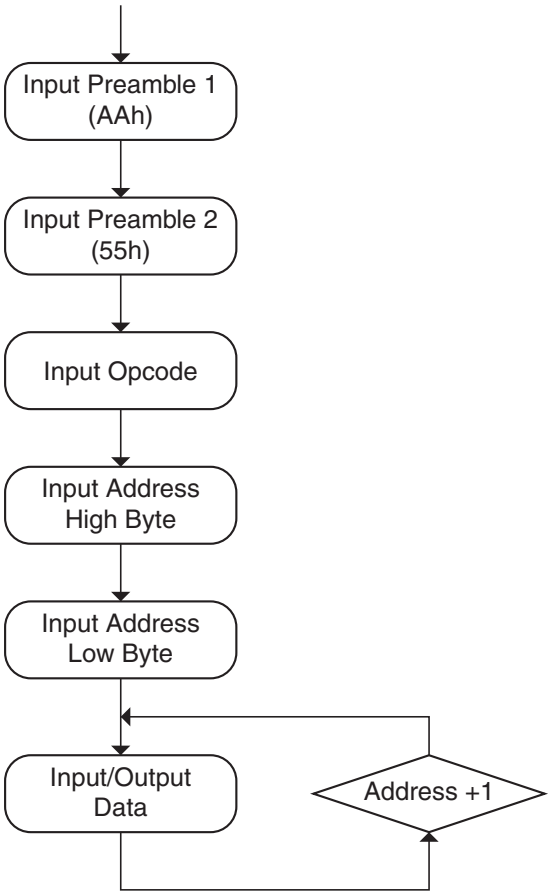

Figure 25-5. ISP Command Packet (Serial)

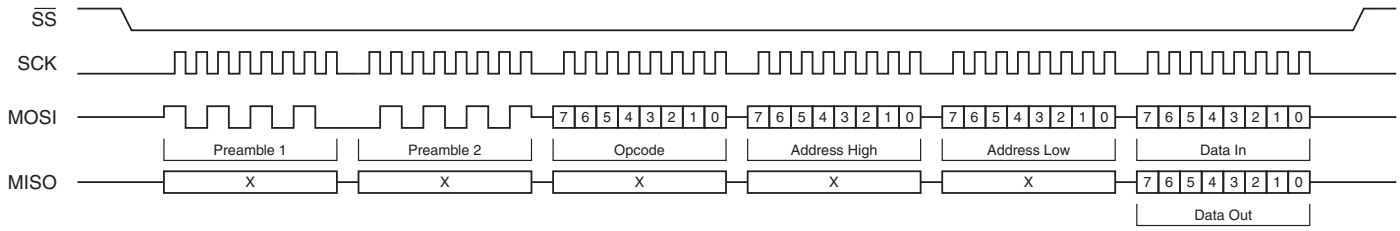

Figure 25-6. ISP Command Packet (Parallel)

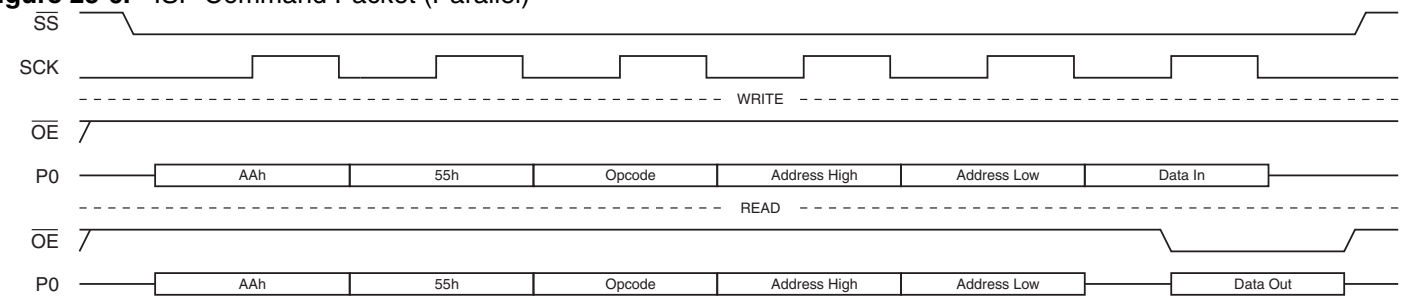

Table 25-2. Programming Command Summary

Command	Opcode	Addr High	Addr Low	Data 0	Data n
Program Enable[1]	1010 1100	0101 0011	–	–	–
Parallel Enable[2]	1010 1100	0011 0101	–	–	–
Chip Erase	1000 1010	–	–	–	–
Read Status	0110 0000	xxxx xxxx	xxxx xxxx	Status Out	
Load Page Buffer[3]	0101 0001	xxxx xxxx	00bb bbbb	Data In 0 ... Data In n	
Write Code Page[3]	0101 0000	aaaa aaaa	asbb bbbb	Data In 0 ... Data In n	
Write Code Page with Auto-Erase[3]	0111 0000	aaaa aaaa	asbb bbbb	Data In 0 ... Data In n	
Read Code Page[3]	0011 0000	aaaa aaaa	asbb bbbb	Data Out 0 ... Data Out n	
Write Data Page[3]	1101 0000	000a aaaa	asbb bbbb	Data In 0 ... Data In n	
Write Data Page with Auto-Erase[3]	1101 0010	000a aaaa	asbb bbbb	Data In 0 ... Data In n	
Read Data Page[3]	1011 0000	000a aaaa	asbb bbbb	Data Out 0 ... Data Out n	
Write User Fuses[3][4][5]	1110 0001	0000 0000	00bb bbbb	Data In 0 ... Data In n	
Write User Fuses with Auto-Erase[3][4][5]	1111 0001	0000 0000	00bb bbbb	Data In 0 ... Data In n	
Read User Fuses[3][4][5]	0110 0001	0000 0000	00bb bbbb	Data Out 0 ... Data Out n	
Write Lock Bits[3][4][6]	1110 0100	0000 0000	00bb bbbb	Data In 0 ... Data In n	
Read Lock Bits[3][4][6]	0110 0100	0000 0000	00bb bbbb	Data Out 0 ... Data Out n	
Write User Signature Page[3]	0101 0010	0000 0000	asbb bbbb	Data In 0 ... Data In n	
Write User Signature Page with Auto-Erase[3]	0111 0010	0000 0000	asbb bbbb	Data In 0 ... Data In n	
Read User Signature Page[3]	0011 0010	0000 0000	asbb bbbb	Data Out 0 ... Data Out n	
Read Atmel Signature Page[3][7]	0011 1000	0000 0000	0sbb bbbb	Data Out 0 ... Data Out n	

Notes:
1. Program Enable must be the **first** command issued after entering into programming mode.
2. Parallel Enable switches the interface from serial to parallel format until $\overline{RST}$ returns high.
3. Any number of Data bytes from 1 to 64 may be written/read. The internal address is incremented between each byte.
4. Each byte address selects one fuse or lock bit. Data bytes must be 00h or FFh.
5. See Table 25-5 on page 164 for Fuse definitions.
6. See Table 25-4 on page 163 for Lock Bit definitions.
7. **Atmel Signature Bytes**:

Address:	0000H	0001H	0002H
AT89LP3240:	1EH	32H	FCH
AT89LP6440:	1EH	64H	FFH

8. **Symbol Key**:

a: Page Address Bit

s: Half Page Select Bit

b: Byte Address Bit

x: Don't Care Bit

25.4 Status Register

The current state of the memory may be accessed by reading the status register. The status register is shown in Table 25-3.

Table 25-3. Status Register

	–	–	–	–	$\overline{\text{LOAD}}$	SUCCESS	$\overline{\text{WRTINH}}$	$\overline{\text{BUSY}}$
Bit	7	6	5	4	3	2	1	0

Symbol	Function
$\overline{\text{LOAD}}$	Load flag. Cleared low by the load page buffer command and set high by the next memory write. This flag signals that the page buffer was previously loaded with data by the load page buffer command.
SUCCESS	Success flag. Cleared low at the start of a programming cycle and will only be set high if the programming cycle completes without interruption from the brownout detector.
$\overline{\text{WRTINH}}$	Write Inhibit flag. Cleared low by the brownout detector (BOD) whenever programming is inhibited due to V_{DD} falling below the minimum required programming voltage. If a BOD episode occurs during programming, the SUCCESS flag will remain low after the cycle is complete.
$\overline{\text{BUSY}}$	Busy flag. Cleared low whenever the memory is busy programming or if write is currently inhibited.

25.5 $\overline{\text{DATA}}$ Polling

The AT89LP3240/6440 implements $\overline{\text{DATA}}$ polling to indicate the end of a programming cycle. While the device is busy, any attempted read of the last byte written will return the data byte with the MSB complemented. Once the programming cycle has completed, the true value will be accessible. During Erase the data is assumed to be FFH and $\overline{\text{DATA}}$ polling will return 7FH. When writing multiple bytes in a page, the $\overline{\text{DATA}}$ value will be the last data byte loaded before programming begins, not the written byte with the highest physical address within the page.

25.6 Flash Security

The AT89LP3240/6440 provides two Lock Bits for Flash Code and Data Memory security. Lock bits can be left unprogrammed (FFh) or programmed (00h) to obtain the protection levels listed in Table 25-4. Lock bits can only be erased (set to FFh) by Chip Erase. Lock bit mode 2 disables programming of all memory spaces, including the User Signature Array and User Configuration Fuses. User fuses must be programmed before enabling Lock bit mode 2 or 3. Lock bit mode 3 implements mode 2 and also blocks reads from the code and data memories; however, reads of the User Signature Array, Atmel Signature Array, and User Configuration Fuses are still allowed.

The Lock Bits will not disable FDATA or IAP programming initiated by the application software.

Table 25-4. Lock Bit Protection Modes

Program Lock Bits (by address)			
Mode	**00h**	**01h**	**Protection Mode**
1	FFh	FFh	No program lock features
2	00h	FFh	Further programming of the Flash is disabled
3	00h	00h	Further programming of the Flash is disabled and verify (read) is also disabled; OCD is disabled

25.7 User Configuration Fuses

The AT89LP3240/6440 includes 11 user fuses for configuration of the device. Each fuse is accessed at a separate address in the User Fuse Row as listed in Table 25-5. Fuses are cleared by programming 00h to their locations. Programming FFh to a fuse location will cause that fuse to maintain its previous state. To set a fuse (set to FFh) the fuse row must be erased and then reprogrammed using the Fuse Write with Auto-erase command. The default state for all fuses is FFh.

Table 25-5. User Configuration Fuse Definitions

Address	Fuse Name	Description
00 – 01h	Clock Source – CS[0:1][2]	Selects source for the system clock: CS1 CS0 Selected Source 00h 00h High Speed Crystal Oscillator (XTAL) 00h FFh Low Speed Crystal Oscillator (XTAL) FFh 00h External Clock on XTAL1 (XCLK) FFh FFh Internal RC Oscillator (IRC)
02 – 03h	Start-up Time – SUT[0:1]	Selects time-out delay for the POR/BOD/PWD wake-up period: SUT1 SUT0 Selected Time-out 00h 00h 1 ms (XTAL); 16 µs (XCLK/IRC) 00h FFh 2 ms (XTAL); 512 µs (XCLK/IRC) FFh 00h 4 ms (XTAL); 1 ms (XCLK/IRC) FFh FFh 16 ms (XTAL); 4 ms (XCLK/IRC)
04h	Reset Pin Enable[3]	FFh: $\overline{\text{RST}}$ pin functions as reset 00h: $\overline{\text{RST}}$ pin functions as general purpose I/O
05h	Brown-Out Detector Enable	FFh: Brown-out Detector Enabled 00h: Brown-out Detector Disabled
06h	On-Chip Debug $\overline{\text{Enable}}$	FFh: On-Chip Debug Disabled 00h: On-Chip Debug Enabled
07h	ISP Enable[3]	FFh: In-System Programming Enabled 00h: In-System Programming Disabled (Enabled at POR only)
08H	User Signature Programming	FFh: Programming of User Signature Disabled 00h: Programming of User Signature Enabled
09H	Tristate Ports	FFh: I/O Ports start in input-only mode (tristated) after reset 00h: I/O Ports start in quasi-bidirectional mode after reset
0AH	OCD Interface Select	FFh: Fast two-wire interface 00h: Do not use
0BH	In-Application Programming	FFh: In-Application Programming Disabled 00h: In-Application Programming Enabled

Notes: 1. The default state for all fuses is FFh.
2. Changes to these fuses will only take effect after a device POR.
3. Changes to these fuses will only take effect after the ISP session terminates by bringing $\overline{\text{RST}}$ high.

25.8 User Signature and Analog Configuration

The User Signature Array contains 256 bytes of non-volatile memory in two 128-byte pages. The first page of the User Signature Array (0000H–007FH) is available for serial numbers, firmware revision information, date codes or other user parameters. The User Signature Array may only be written by an external device when the User Signature Programming Fuse is enabled. When the fuse is enabled, Chip Erase will also erase the first page of the array. When the fuse is disabled, the array is not affected by write or erase commands. Programming of the Signature Array can also be disabled by the Lock Bits. However, reading the signature is always allowed and the array should not be used to store security sensitive information. The User Signature Array may be modified during execution through the In-Application Programming interface, regardless of the state of the User Signature Programming fuse or Lock Bits, provided that the IAP Fuse is enabled. Note that the address of the User Signature Array, as seen by the IAP interface, equals the User Signature address plus 256 (0100H–01FFH instead of 0000H–00FFH).

The second page of the User Signature Array (0080H–00FFH) contains analog configuration parameters for the AT89LP3240/6440. Each byte represents a parameter as listed in Table 25-6 and is preset in the factory. The parameters are read at POR and the device is configured accordingly. The second page of the array is not affected by Chip Erase. Other bytes in this page may be used as additional signature space; however, care should be taken to preserve the parameter values when modifying other bytes.

Table 25-6. Analog Configuration Definitions

Address	Parameter Name	Description
0080H	RC Oscillator Calibration Byte	The RC Calibration Byte controls the frequency of the internal RC oscillator. The frequency is inversely proportional to the calibration value such that higher values result in lower frequencies. A copy of the factory-set calibration value is stored at location 0008H of the Atmel Signature.

25.9 Programming Interface Timing

This section details general system timing sequences and constraints for entering or exiting In-System Programming as well as parameters related to the Serial Peripheral Interface during ISP. The general timing parameters for the following waveform figures are listed in section "Timing Parameters" on page 169.

25.9.1 Power-up Sequence

Execute this sequence to enter programming mode immediately after power-up. In the $\overline{RST}$ pin is disabled or if the ISP Fuse is disabled, this is the only method to enter programming (see "External Reset" on page 35).

1. Apply power between VDD and GND pins. $\overline{RST}$ should remain low.
2. Wait at least t_{PWRUP} and drive $\overline{SS}$ high.
3. Wait at least t_{SUT} for the internal Power-on Reset to complete. The value of t_{SUT} will depend on the current settings of the device.
4. Start programming session.

Figure 25-7. Serial Programming Power-up Sequence

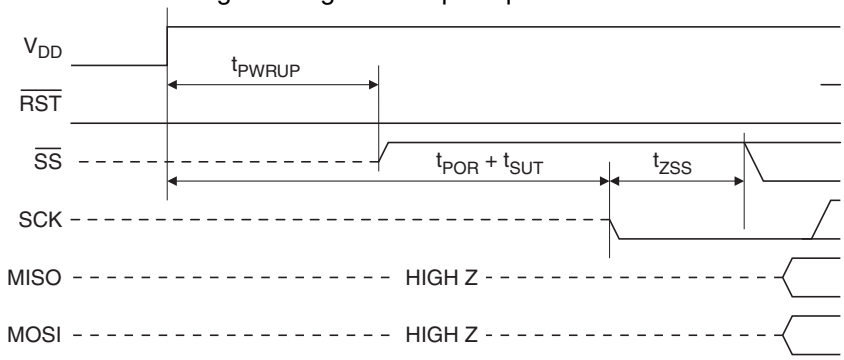

25.9.2 Power-down Sequence

Execute this sequence to power-down the device **after** programming.

1. Drive SCK low.
2. Wait at least t_{SSD} and bring $\overline{SS}$ high.
3. Tristate MOSI.
4. Wait at least t_{SSZ} and then tristate $\overline{SS}$ and SCK.
5. Wait no more than t_{PWRDN} and power off VDD.

Figure 25-8. Serial Programming Power-down Sequence

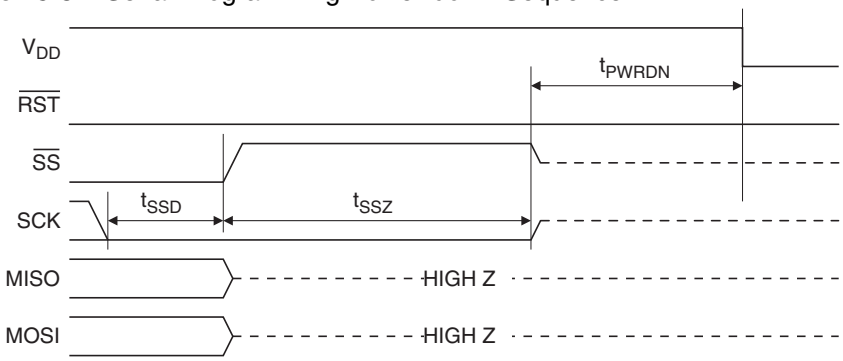

25.9.3 ISP Start Sequence

Execute this sequence to exit CPU execution mode and enter ISP mode when the device has passed Power-On Reset and is already operational.

1. Drive $\overline{RST}$ low.
2. Drive $\overline{SS}$ high.
3. Wait $t_{RLZ} + t_{STL}$.
4. Start programming session.

Figure 25-9. In-System Programming (ISP) Start Sequence

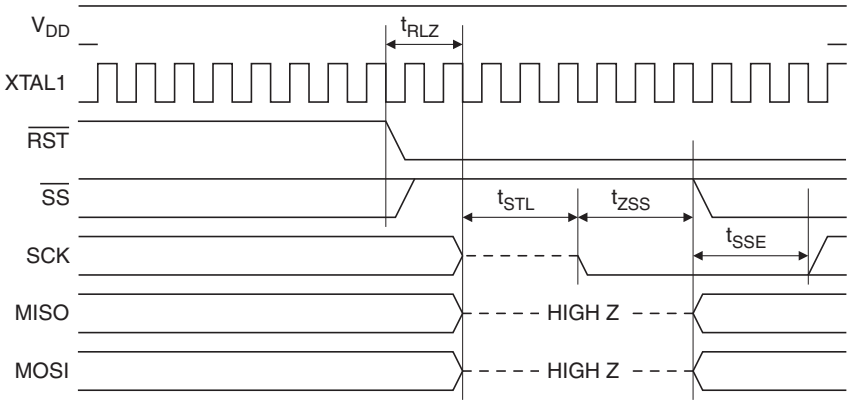

25.9.4 ISP Exit Sequence

Execute this sequence to exit ISP mode and resume CPU execution mode.

1. Drive SCK low.
1. Wait at least t_{SSD} and drive $\overline{SS}$ high.
2. Tristate MOSI.
3. Wait at least t_{SSZ} and bring $\overline{RST}$ high.
4. Tristate SCK.
5. Wait t_{RHZ} and tristate $\overline{SS}$.

Figure 25-10. In-System Programming (ISP) Exit Sequence

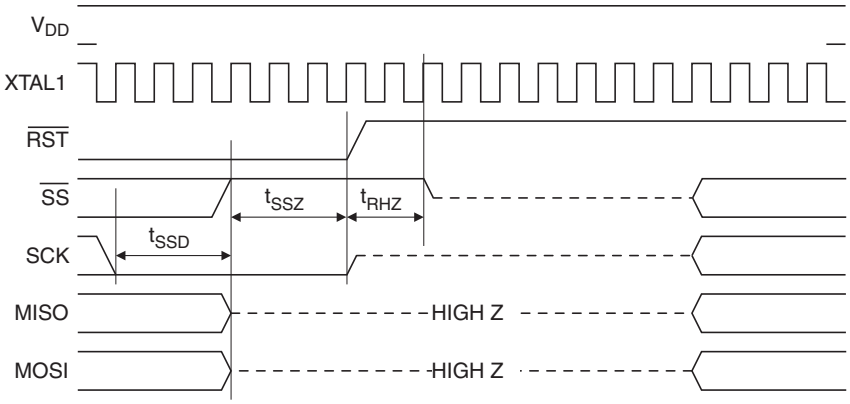

Note: The waveforms on this page are not to scale.

25.9.5 Serial Peripheral Interface

The Serial Peripheral Interface (SPI) is a byte-oriented full-duplex synchronous serial communication channel. During In-System Programming, the programmer always acts as the SPI master and the target device always acts as the SPI slave. The target device receives serial data on MOSI and outputs serial data on MISO. The Programming Interface implements a standard SPI Port with a fixed data order and For In-System Programming, bytes are transferred MSB first as shown in Figure 25-11. The SCK phase and polarity follow SPI clock mode 0 (CPOL = 0,

CPHA = 0) where bits are sampled on the rising edge of SCK and output on the falling edge of SCK. For more detailed timing information see Figure 25-12.

Figure 25-11. ISP Byte Sequence

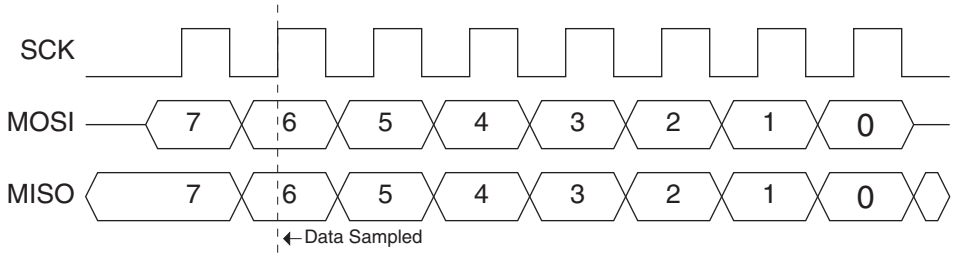

Figure 25-12. Serial Programming Interface Timing

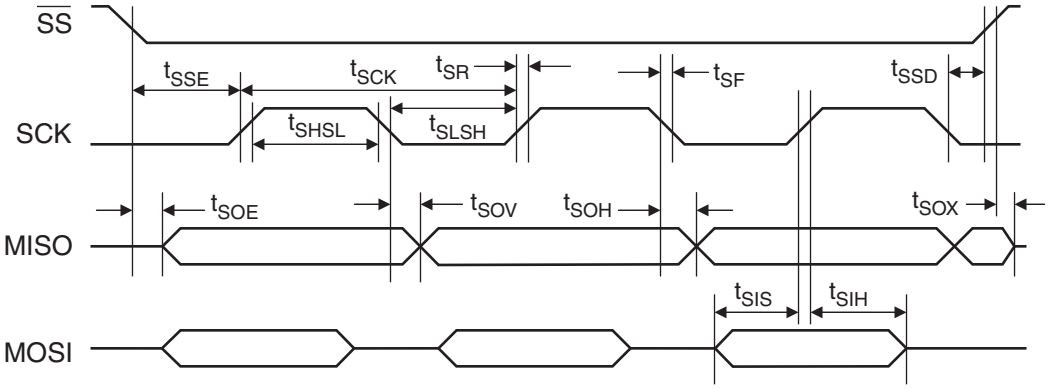

Figure 25-13. Parallel Programming Interface Timing

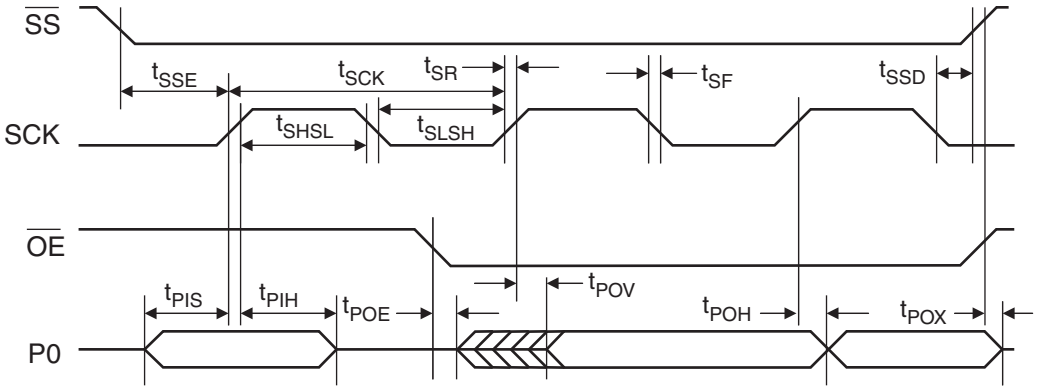

25.9.6 Timing Parameters

The timing parameters for Figure 25-7, Figure 25-8, Figure 25-9, Figure 25-10, Figure 25-12 and Figure 25-13 are shown in Table .

Table 25-7. Programming Interface Timing Parameters

Symbol	Parameter	Min	Max	Units
t_{CLCL}	System Clock Cycle Time	0	60	ns
t_{PWRUP}	Power On to $\overline{SS}$ High Time	10		µs
t_{POR}	Power-on Reset Time		100	µs
t_{PWRDN}	$\overline{SS}$ Tristate to Power Off		1	µs
t_{RLZ}	$\overline{RST}$ Low to I/O Tristate	t_{CLCL}	2 t_{CLCL}	ns
t_{STL}	$\overline{RST}$ Low Settling Time	100		ns
t_{RHZ}	$\overline{RST}$ High to $\overline{SS}$ Tristate	0	2 t_{CLCL}	ns
t_{SCK}	Serial Clock Cycle Time	200[1]		ns
t_{SHSL}	Clock High Time	75		ns
t_{SLSH}	Clock Low Time	50		ns
t_{SR}	Rise Time		25	ns
t_{SF}	Fall Time		25	ns
t_{SIS}	Serial Input Setup Time	10		ns
t_{SIH}	Serial Input Hold Time	10		ns
t_{SOH}	Serial Output Hold Time		10	ns
t_{SOV}	Serial Output Valid Time		35	ns
t_{PIS}	Parallel Input Setup Time	10		ns
t_{PIH}	Parallel Input Hold Time	10		ns
t_{POH}	Parallel Output Hold Time		10	ns
t_{POV}	Parallel Output Valid Time		35	ns
t_{SOE}	Serial Output Enable Time		10	ns
t_{SOX}	Serial Output Disable Time		25	ns
t_{POE}	Parallel Output Enable Time		10	ns
t_{POX}	Parallel Output Disable Time		25	ns
t_{SSE}	$\overline{SS}$ Enable Lead Time	t_{SLSH}		ns
t_{SSD}	$\overline{SS}$ Disable Lag Time	t_{SLSH}		ns
t_{ZSS}	SCK Setup to $\overline{SS}$ Low	25		ns
t_{SSZ}	SCK Hold after $\overline{SS}$ High	25		ns
t_{WR}	Write Cycle Time	2.5		ms
t_{AWR}	Write Cycle with Auto-Erase Time	5		ms
t_{ERS}	Chip Erase Cycle Time	7.5		ms

Note: 1. t_{SCK} is independent of t_{CLCL}.

26. Electrical Characteristics

26.1 Absolute Maximum Ratings*

Operating Temperature	-40°C to +85°C
Storage Temperature	-65°C to +150°C
Voltage on Any Pin with Respect to Ground	-0.7V to +3.6V
Maximum Operating Voltage	3.6V
DC Current per I/O Pin	10 mA
DC Total Current	200.0 mA

*NOTICE: Stresses beyond those listed under "Absolute Maximum Ratings" may cause permanent damage to the device. This is a stress rating only and functional operation of the device at these or any other conditions beyond those indicated in the operational sections of this specification is not implied. Exposure to absolute maximum rating conditions for extended periods may affect device reliability.

26.2 DC Characteristics

T_A = -40°C to 85°C, V_{DD} = 2.4V to 3.6V (unless otherwise noted)

Symbol	Parameter	Condition	Min	Max	Units
V_{IL}	Input Low-voltage		-0.5	0.2 V_{DD} - 0.1	V
V_{IH}	Input High-voltage		0.2 V_{DD} + 0.9	V_{DD} + 0.5	V
V_{OL}	Output Low-voltage[1]	I_{OL} = 10 mA, V_{DD} = 2.7V, T_A = 85°C		0.5	V
V_{OH}	Output High-voltage With Weak Pull-ups Enabled	I_{OH} = -50 µA, V_{DD} = 3V ±10%	1.35		V
		I_{OH} = -30 µA	0.7 V_{DD}		V
		I_{OH} = -12 µA	0.85 V_{DD}		V
V_{OH1}	Output High-voltage With Strong Pull-ups Enabled	I_{OH} = -10 mA, T_A = 85°C	0.6 V_{DD}		
		I_{OH} = -5 mA, T_A = 85°C	0.8 V_{DD}		
I_{IL}	Logic 0 Input Current	V_{IN} = 0.45V		-50	µA
I_{TL}	Logic 1 to 0 Transition Current	V_{IN} = 1.5V, V_{DD} = 3V ±10%		-250	µA
I_{LI}	Input Leakage Current	0 < V_{IN} < V_{DD}		±10	µA
$R_{\overline{RST}}$	Reset Pull-up Resistor		50	150	kΩ
C_{IO}	Pin Capacitance	Test Freq. = 1 MHz, T_A = 25°C		10	pF
$C_{DECOUPLING}$	Supply Decoupling Capacitance	Minimum per VDD pin = 20 nF	60		nF
I_{CC}	Power Supply Current	Active Mode, 12 MHz, V_{DD} = 3.6V		8.5	mA
		Idle Mode, 12 MHz, V_{DD} = 3.6V P1.0 & P1.1 = 0V or V_{DD}		3	mA
	Power-down Mode[2]	V_{DD} = 3.6V, P1.0 & P1.1 = 0V or V_{DD}		5	µA
		V_{DD} = 3V, P1.0 & P1.1 = 0V or V_{DD}		2	µA

Notes:
1. Under steady state (non-transient) conditions, I_{OL} must be externally limited as follows:
   Maximum I_{OL} per port pin: 10 mA
   Maximum total I_{OL} for all output pins: 15 mA
   If I_{OL} exceeds the test condition, V_{OL} may exceed the related specification. Pins are not guaranteed to sink current greater than the listed test conditions.
2. Minimum V_{DD} for Power-down is 2V.

26.3 Safe Operating Conditions

26.3.1 Speed

Figure 26-1 shows the safe operating frequencies for the AT89LP3240/6440 versus supply voltage. The device is only gauranteed to operate correctly within this area. Note that the on-chip Brown-out Detector (BOD) has a minimum threshold of 1.8V. Systems that rely on this BOD to prevent incorrect operation due to power loss should only operate at 12 MHz or below. Systems at higher frequencies may require an external BOD.

Figure 26-1. Operating Frequency vs. V_{DD}

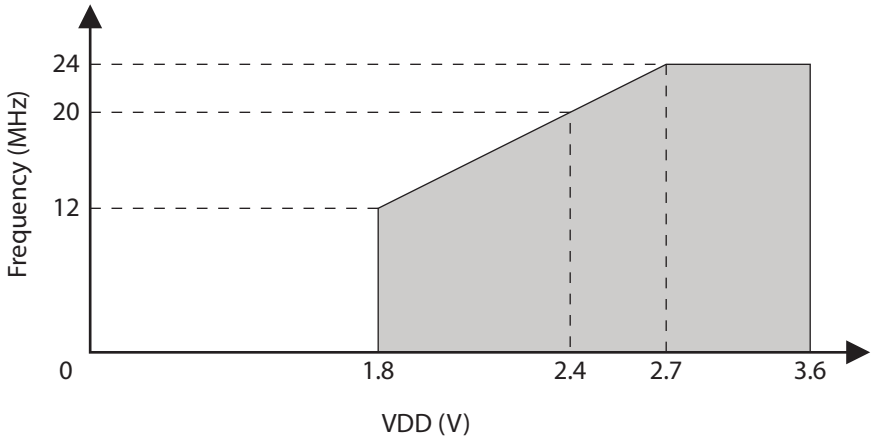

26.3.2 Power Dissipation

Figure 26-2. Maximum Operating Current vs. Temperature (V_{DD} = 3.3V)

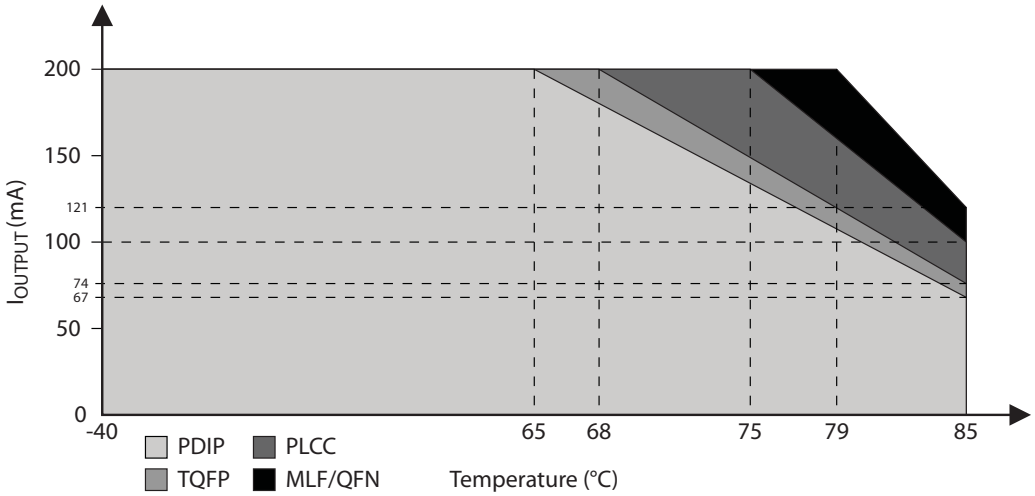

26.4 Typical Characteristics

The following charts show typical behavior. These figures are not tested during manufacturing. All current consumption measurements are performed with all I/O pins configured as quasi-bidirectional (with internal pull-ups). A square wave generator with rail-to-rail output is used as an external clock source for consumption versus frequency measurements.

26.4.1 Supply Current (Internal Oscillator)

Figure 26-3. Active Supply Current vs. V_{DD} (8MHz Internal Oscillator)

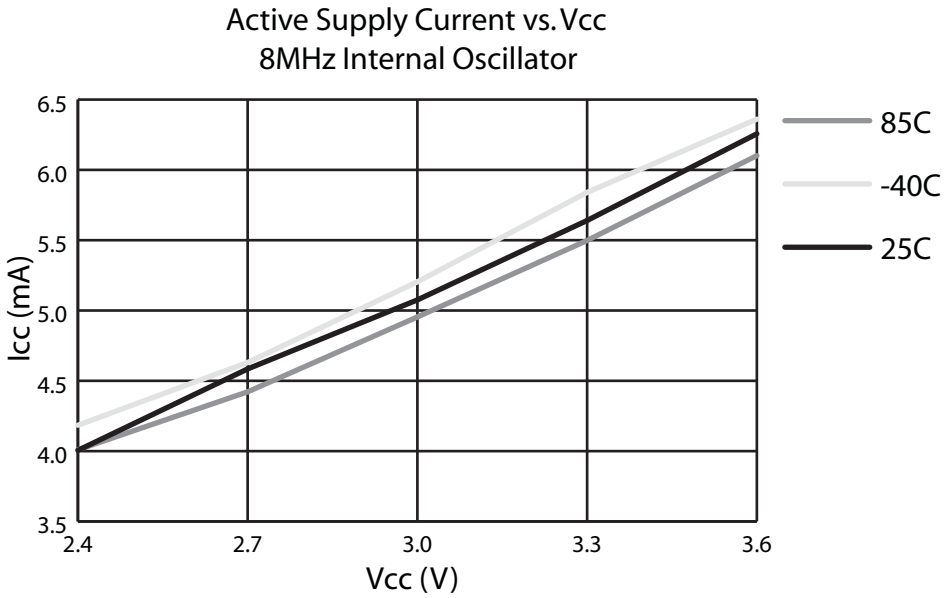

Figure 26-4. Idle Supply Current vs. V_{DD} (8MHz Internal Oscillator)

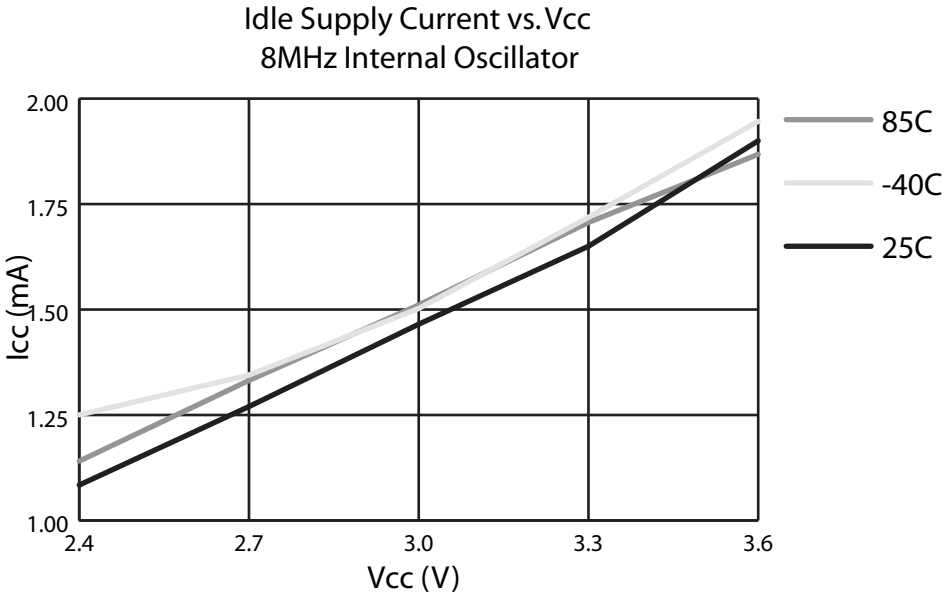

26.4.2 Supply Current (External Clock)

Figure 26-5. Active Supply Current vs. Frequency

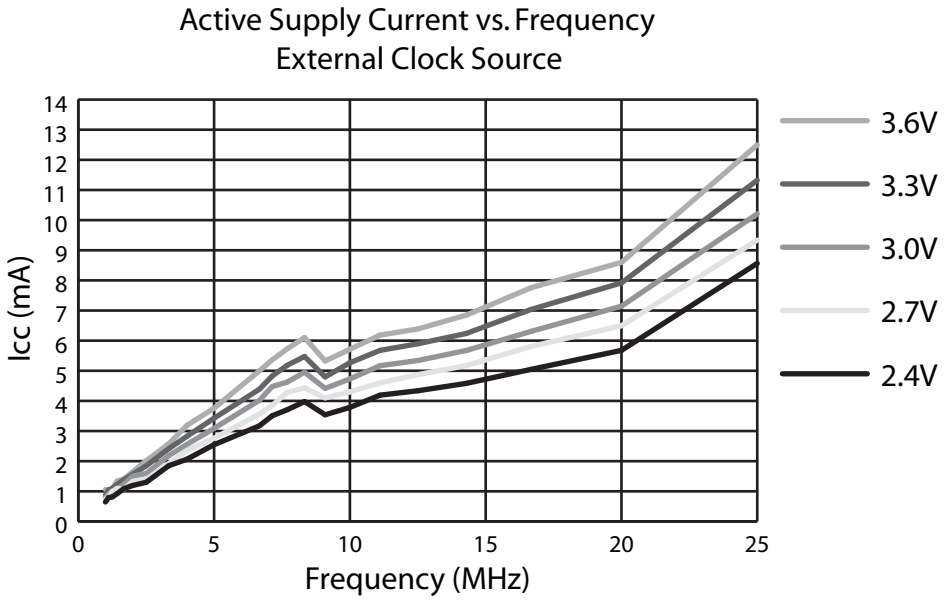

Figure 26-6. Idle Supply Current vs. Frequency

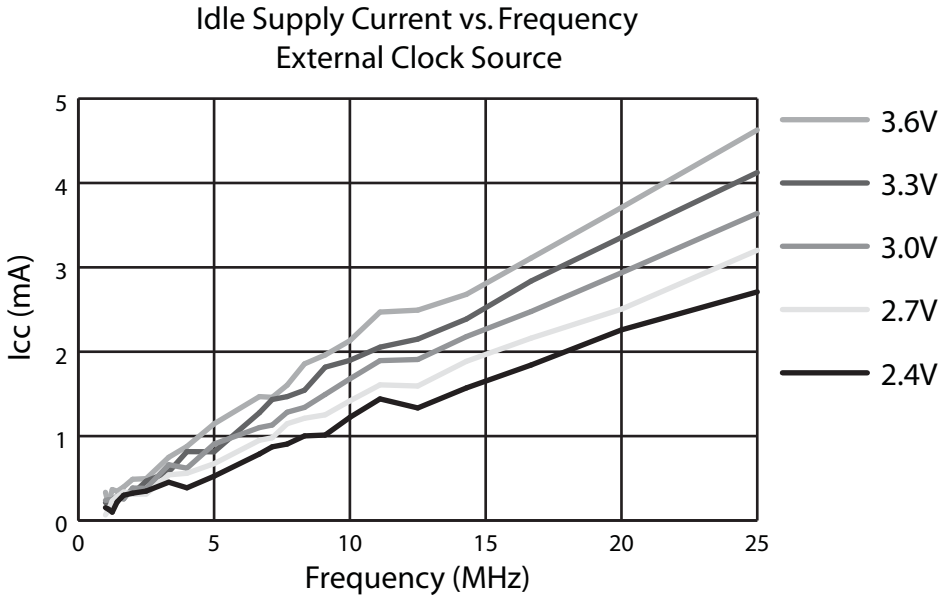

26.4.3 Quasi-Bidirectional Input

Figure 26-7. Quasi-bidirectional Input Transition Current at 3.3V

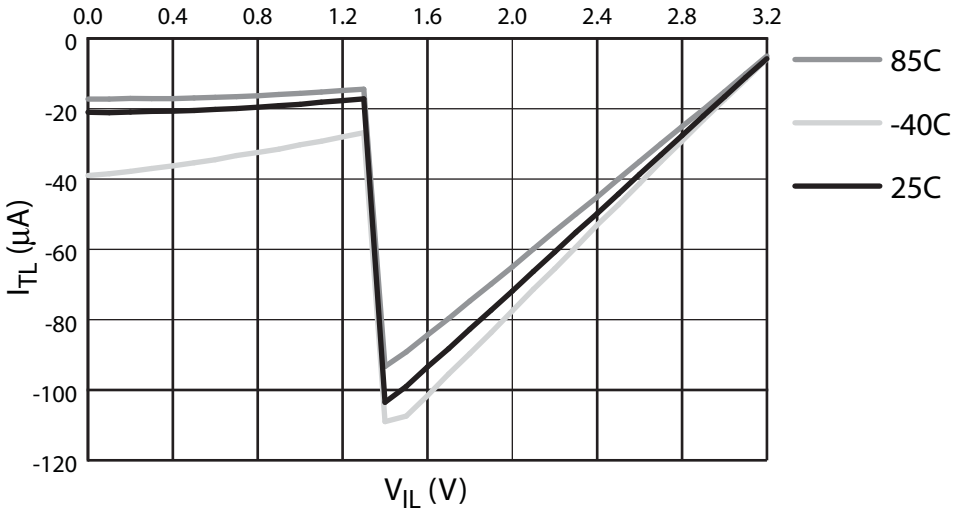

26.4.4 Quasi-Bidirectional Output

Figure 26-8. Quasi-Bidirectional Output I-V Source Characteristic at 3V

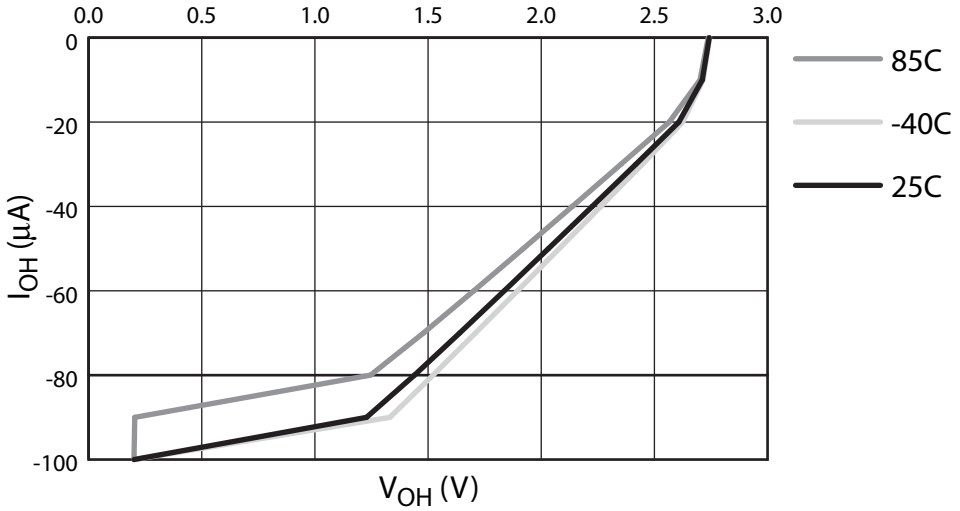

26.4.5 Push-Pull Output

Figure 26-9. Push-Pull Output I-V Source Characteristic at 3V

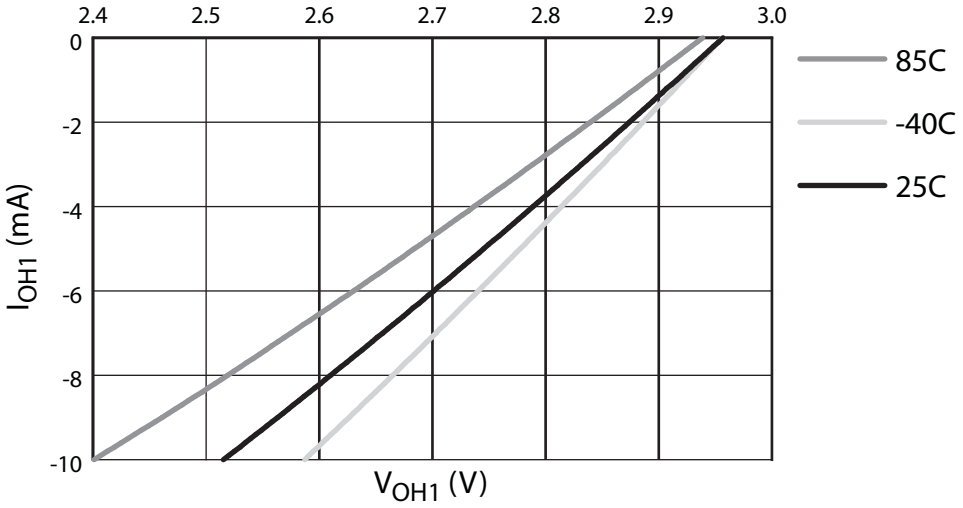

Figure 26-10. Push-Pull Output I-V Sink Characteristic at 3V

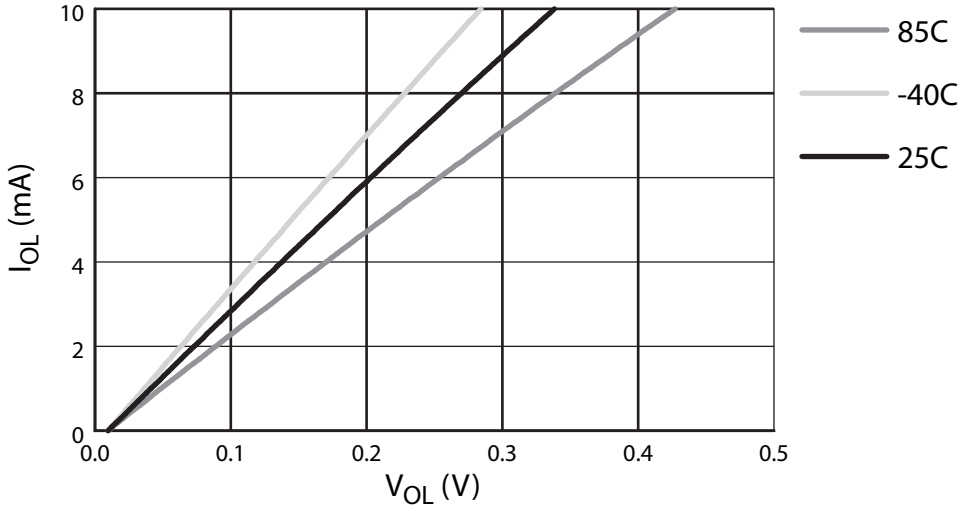

Note: The I_{OL}/V_{OL} characteristic applies to Push-Pull, Quasi-Bidirectional and Open-Drain modes.

26.5 Clock Characteristics

Figure 26-11. External Clock Drive Waveform

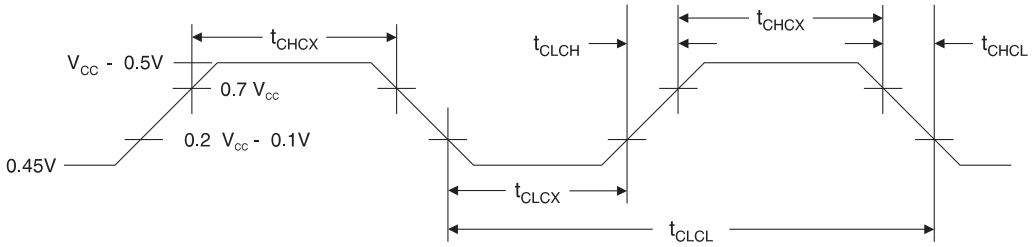

The values shown in these tables are valid for T_A = -40°C to 85°C and V_{DD} = 2.4 to 3.6V, unless otherwise noted.

Table 26-1. External Clock Parameters

Symbol	Parameter	V_{DD} = 2.4V to 3.6V		V_{DD} = 2.7V to 3.6V		Units
		Min	Max	Min	Max	
$1/t_{CLCL}$	Oscillator Frequency[1]	0	20	0	25	MHz
t_{CLCL}	Clock Period	50		40		ns
t_{CHCX}	External Clock High Time	12		12		ns
t_{CLCX}	External Clock Low Time	12		12		ns
t_{CLCH}	External Clock Rise Time		5		5	ns
t_{CHCL}	External Clock Fall Time		5		5	ns

Note: 1. No wait state (single-cycle) execution speed

Table 26-2. Clock Characteristics

Symbol	Parameter	Condition	Min	Max	Units
f_{XTAL}	Crystal Oscillator Frequency	Low Speed Oscillator	10	100	kHz
		High Speed Oscillator	0.5	24	MHz
f_{RC}	Internal Oscillator Frequency	T_A = 25°C; V_{DD} = 3.0V	7.92	8.08	MHz
		V_{DD} = 2.4 to 3.6V	7.80	8.20	MHz

Figure 26-12. Typical Internal Oscillator Frequency vs. VCC

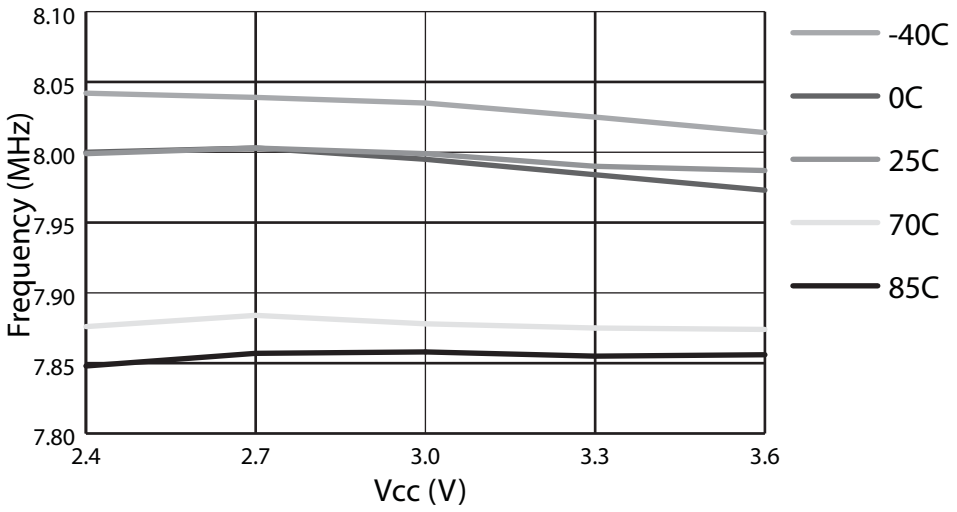

Figure 26-13. Typical Crystal Oscillator Swing with Quartz Crystal and C1=C2, T_A = 25°C

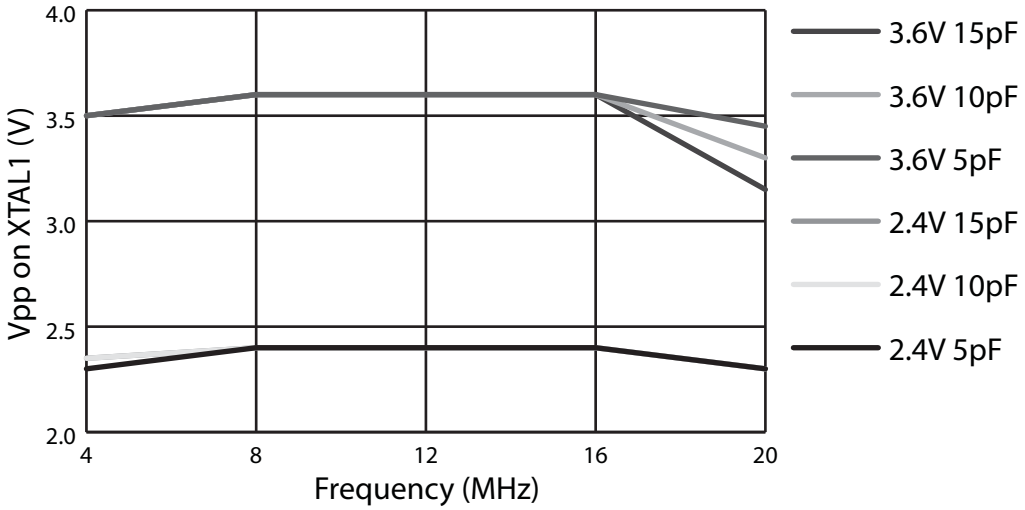

Note: 1. Replacing capacitor C1 with a resistor R1 of 4 MΩ results in similar swing levels on XTAL1.

Figure 26-14. Typical Crystal Oscillator Swing with Ceramic Resonator and C1=C2, T_A = 25°C

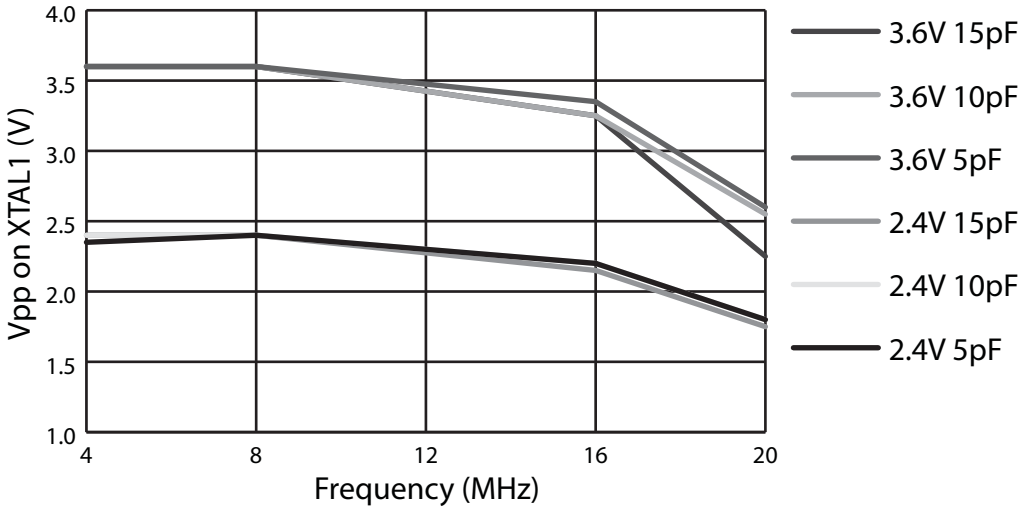

26.6 Reset Characteristics

The values shown in this table are valid for T_A = -40°C to 85°C and V_{DD} = 2.4 to 3.6V, unless otherwise noted.

Table 26-3. Reset Characteristics

Symbol	Parameter	Condition	Min	Max	Units
$R_{\overline{RST}}$	Reset Pull-up Resistor		50	150	kΩ
V_{POR}	Power-On Reset Threshold		1.3	1.6	V
V_{BOD}	Brown-Out Detector Threshold		1.8	2.0	V
V_{BH}	Brown-Out Detector Hysteresis		200	300	mV
t_{POR}	Power-On Reset Delay		135	150	µs
t_{WDTRST}	Watchdog Reset Pulse Width		$16t_{CLCL}$		ns

26.7 External Data Memory Characteristics

The values shown in this table are valid for T_A = -40°C to 85°C and V_{DD} = 2.4 to 3.6V, unless otherwise noted. Under operating conditions, load capacitance for Port 0 and ALE = 100 pF; load capacitance for all other outputs = 80 pF. Parameters refer to Figure 26-15 and Figure 26-16.

Table 26-4. External Data Memory Characteristics

Symbol	Parameter	Variable Oscillator		Units
		Min	Max	
$1/t_{CLCL}$	Oscillator Frequency	0	24	MHz
t_{LHLL}	ALE Pulse Width(3)	t_{CLCL} - d		ns
t_{AVLL}	Address Valid to ALE Low	$0.5t_{CLCL}$ - d(1)		ns
t_{LLAX}	Address Hold after ALE Low	$0.5t_{CLCL}$ - d(2)		ns
t_{RLRH}	$\overline{RD}$ Pulse Width(4)	t_{CLCL} - d		ns
t_{WLWH}	$\overline{WR}$ Pulse Width(4)	t_{CLCL} - d		ns
t_{RLDV}	$\overline{RD}$ Low to Valid Data In		t_{CLCL} - d	ns
t_{RHDX}	Data Hold after $\overline{RD}$	0		ns
t_{RHDZ}	Data Float after $\overline{RD}$		t_{CLCL} - d	ns
t_{LLDV}	ALE Low to Valid Data In		$2t_{CLCL}$ - d	ns
t_{AVDV}	Address to Valid Data In		$2.5t_{CLCL}$ - d(1)	ns
t_{LLWL}	ALE Low to $\overline{RD}$ or $\overline{WR}$ Low	t_{CLCL} - d	t_{CLCL} + d	ns
t_{AVWL}	Address to $\overline{RD}$ or $\overline{WR}$ Low	$1.5t_{CLCL}$ - d(1)		ns
t_{QVWX}	Data Valid to $\overline{WR}$ Transition	$0.5t_{CLCL}$ - d(1)		ns
t_{QVWH}	Data Valid to $\overline{WR}$ High	$1.5t_{CLCL}$ - d(1)		ns
t_{WHQX}	Data Hold after $\overline{WR}$	$0.5t_{CLCL}$ - d(2)		ns
t_{RLAZ}	$\overline{RD}$ Low to Address Float		$-0.5t_{CLCL}$ + d(1)	ns
t_{WHAX}	Address Hold after $\overline{RD}$ or $\overline{WR}$ High	$0.5t_{CLCL}$ - d(2)		ns
t_{WHLH}	$\overline{RD}$ or $\overline{WR}$ High to ALE High(5)	t_{CLCL} - d	t_{CLCL} + d	ns

Notes: 1. This assumes 50% clock duty cycle. The half period depends on the clock high value t_{CHCX} (high duty cycle).
2. This assumes 50% clock duty cycle. The half period depends on the clock low value t_{CLCX} (low duty cycle).

3. Parameter t_{LHLL} applies only when ALES = 1.
4. The strobe pulse width may be lengthened by 1, 2 or 3 additional t_{CLCL} using wait states.
5. Parameter t_{WHLH} applies only when ALES = 0, or when two MOVX instructions occur in succession.

Figure 26-15. External Data Memory Read Cycle

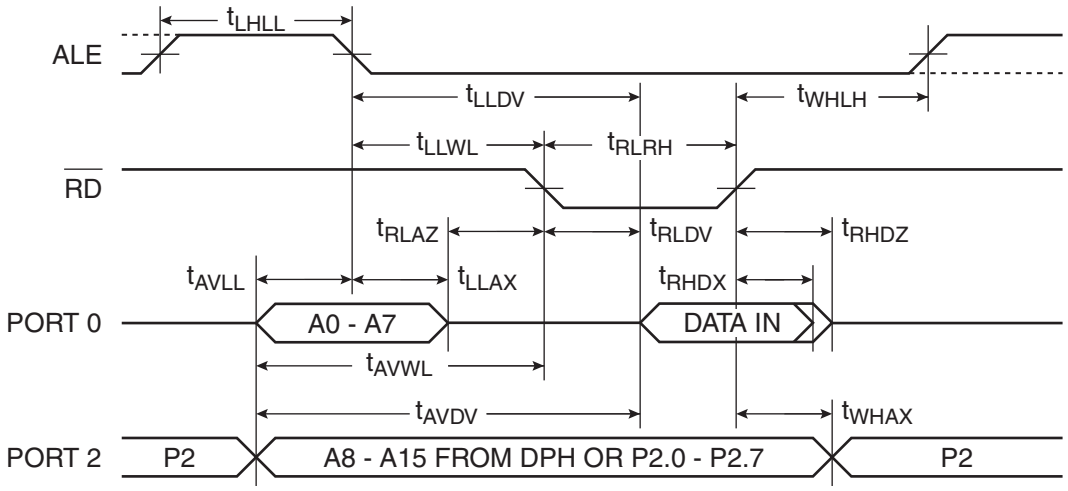

Figure 26-16. External Data Memory Write Cycle

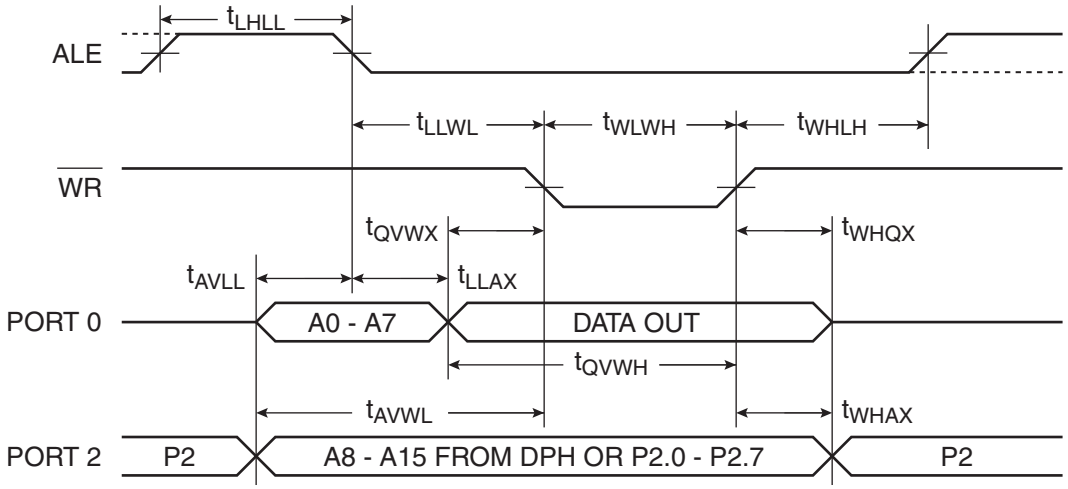

26.8 Serial Peripheral Interface Timing

The values shown in these tables are valid for T_A = -40°C to 85°C and V_{DD} = 2.4 to 3.6V, unless otherwise noted.

Table 26-5. SPI **Master** Characteristics

Symbol	Parameter	Min	Max	Units
t_{CLCL}	Oscillator Period	41.6		ns
t_{SCK}	Serial Clock Cycle Time	$4t_{CLCL}$		ns
t_{SHSL}	Clock High Time	$t_{SCK}/2$ - 25		ns
t_{SLSH}	Clock Low Time	$t_{SCK}/2$ - 25		ns
t_{SR}	Rise Time		25	ns
t_{SF}	Fall Time		25	ns

Table 26-5. SPI **Master** Characteristics

Symbol	Parameter	Min	Max	Units
t_{SIS}	Serial Input Setup Time	10		ns
t_{SIH}	Serial Input Hold Time	10		ns
t_{SOH}	Serial Output Hold Time		10	ns
t_{SOV}	Serial Output Valid Time		35	ns

Table 26-6. SPI **Slave** Characteristics

Symbol	Parameter	Min	Max	Units
t_{CLCL}	Oscillator Period	41.6		ns
t_{SCK}	Serial Clock Cycle Time	$4t_{CLCL}$		ns
t_{SHSL}	Clock High Time	$1.5\ t_{CLCL} - 25$		ns
t_{SLSH}	Clock Low Time	$1.5\ t_{CLCL} - 25$		ns
t_{SR}	Rise Time		25	ns
t_{SF}	Fall Time		25	ns
t_{SIS}	Serial Input Setup Time	10		ns
t_{SIH}	Serial Input Hold Time	10		ns
t_{SOH}	Serial Output Hold Time		10	ns
t_{SOV}	Serial Output Valid Time		35	ns
t_{SOE}	Output Enable Time		10	ns
t_{SOX}	Output Disable Time		25	ns
t_{SSE}	Slave Enable Lead Time	10		ns
t_{SSD}	Slave Disable Lag Time	0		ns

Figure 26-17. SPI Master Timing (CPHA = 0)

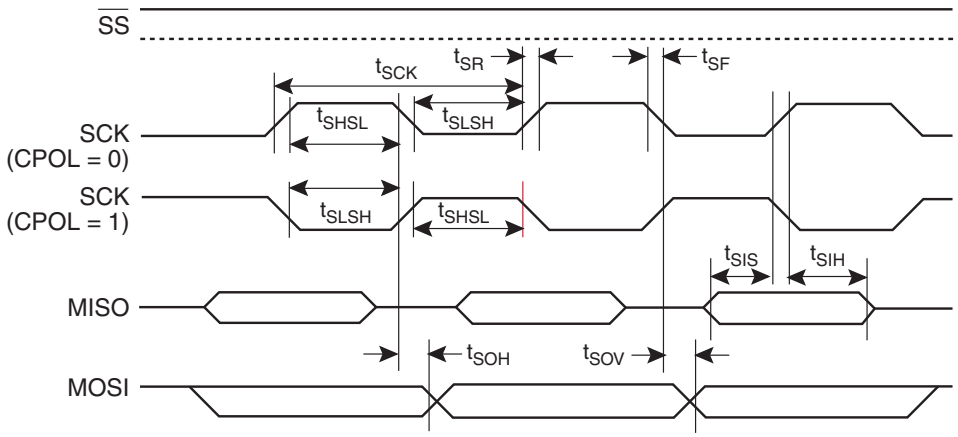

Figure 26-18. SPI Slave Timing (CPHA = 0)

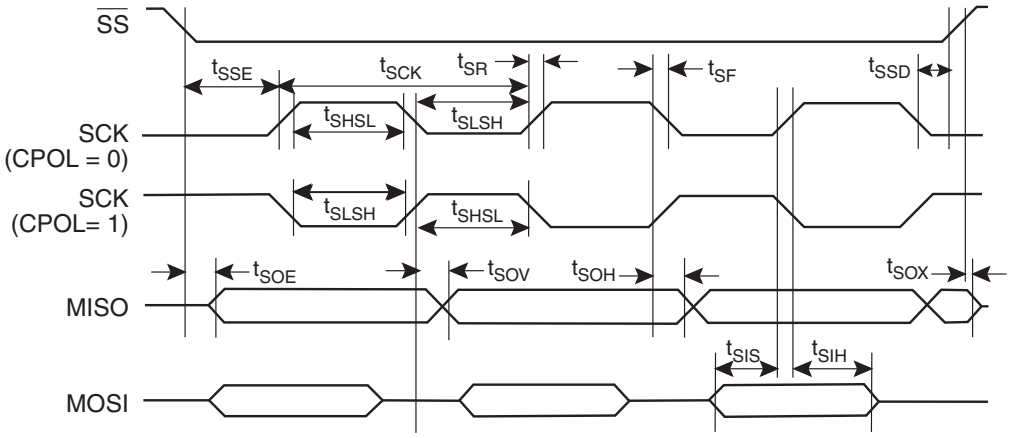

Figure 26-19. SPI Master Timing (CPHA = 1)

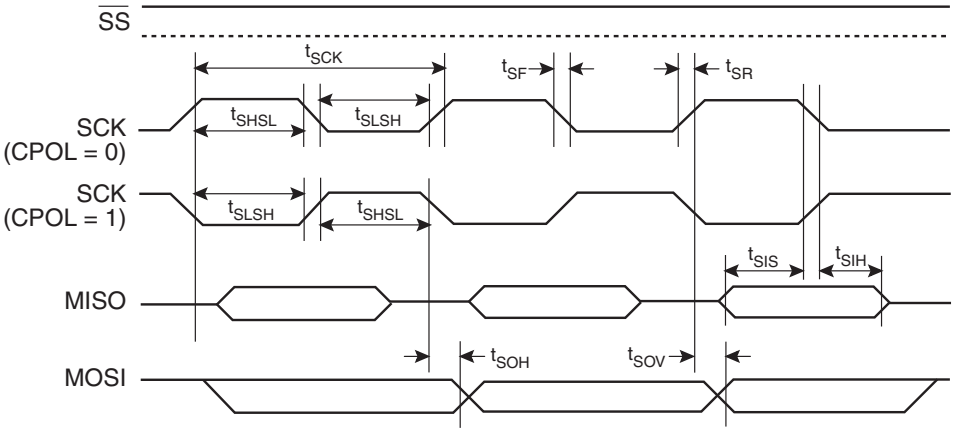

Figure 26-20. SPI Slave Timing (CPHA = 1)

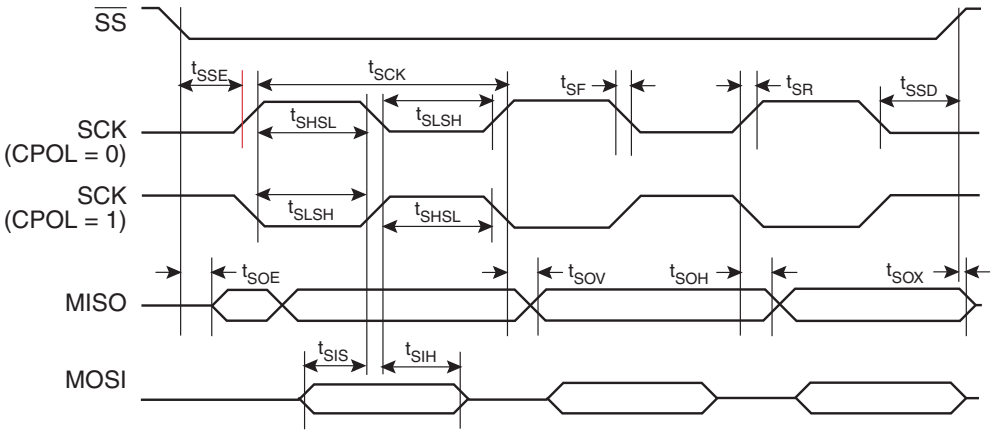

26.9 Two-wire Serial Interface Characteristics

Table 26-7 describes the requirements for devices connected to the Two-wire Serial Bus. The AT89LP3240/6440 Two-wire Serial Interface meets or exceeds these requirements under the noted conditions. The values shown in this table are valid for T_A = -40°C to 85°C and V_{DD} = 2.4 to 3.6V, unless otherwise noted.

Timing symbols refer to Figure 26-21.

Table 26-7. Two-wire Serial Bus Requirements

Symbol	Parameter	Condition	Min	Max	Units
V_{IL}	Input Low-voltage		-0.5	0.3 V_{DD}	V
V_{IH}	Input High-voltage		0.7 V_{DD}	V_{DD} + 0.5	V
V_{hys} (1)	Hysteresis of Schmitt Trigger Inputs		0.05 V_{DD} (2)	–	V
V_{OL} (1)	Output Low-voltage	3 mA sink current	0	0.4	V
t_r (1)	Rise Time for both SDA and SCL		20 + 0.1C_b (3)(2)	300	ns
t_{of} (1)	Output Fall Time from V_{IHmin} to V_{ILmax}	10 pF < C_b < 400 pF (3)	20 + 0.1C_b (3)(2)	250	ns
t_{SP} (1)	Spikes Suppressed by Input Filter		0	50 (2)	ns
I_i	Input Current each I/O Pin	0.1V_{DD} < V_i < 0.9V_{DD}	-10	10	µA
C_i (1)	Capacitance for each I/O Pin		–	10	pF
f_{SCL}	SCL Clock Frequency	f_{CK} (4) > 16f_{SCL}	0	400	kHz
Rp	Value of Pull-up resistor	f_{SCL} ≤100 kHz	$\frac{V_{DD} - 0.4V}{3mA}$	$\frac{1000ns}{C_b}$	Ω
		f_{SCL} > 100 kHz	$\frac{V_{DD} - 0.4V}{3mA}$	$\frac{300ns}{C_b}$	Ω
$t_{HD;STA}$	Hold Time (repeated) START Condition	f_{SCL} ≤100 kHz	4.0	–	µs
		f_{SCL} > 100 kHz	0.6	–	µs
t_{LOW}	Low Period of the SCL Clock	f_{SCL} ≤100 kHz	4.7	–	µs
		f_{SCL} > 100 kHz	1.3	–	µs
t_{HIGH}	High period of the SCL clock	f_{SCL} ≤100 kHz	4.0	–	µs
		f_{SCL} > 100 kHz	0.6	–	µs
$t_{SU;STA}$	Set-up time for a repeated START condition	f_{SCL} ≤100 kHz	4.7	–	µs
		f_{SCL} > 100 kHz	0.6	–	µs
$t_{HD;DAT}$	Data hold time	f_{SCL} ≤100 kHz	0	3.45	µs
		f_{SCL} > 100 kHz	0	0.9	µs
$t_{SU;DAT}$	Data setup time	f_{SCL} ≤100 kHz	250	–	ns
		f_{SCL} > 100 kHz	100	–	ns
$t_{SU;STO}$	Setup time for STOP condition	f_{SCL} ≤100 kHz	4.0	–	µs
		f_{SCL} > 100 kHz	0.6	–	µs
t_{BUF}	Bus free time between a STOP and START condition	f_{SCL} ≤100 kHz	4.7	–	µs

Notes: 1. In AT89LP3240/6440, this parameter is characterized and not 100% tested.
2. Required only for f_{SCL} > 100 kHz.

3. C_b = capacitance of one bus line in pF.
4. f_{CK} = CPU clock frequency

Figure 26-21. Two-wire Serial Bus Timing

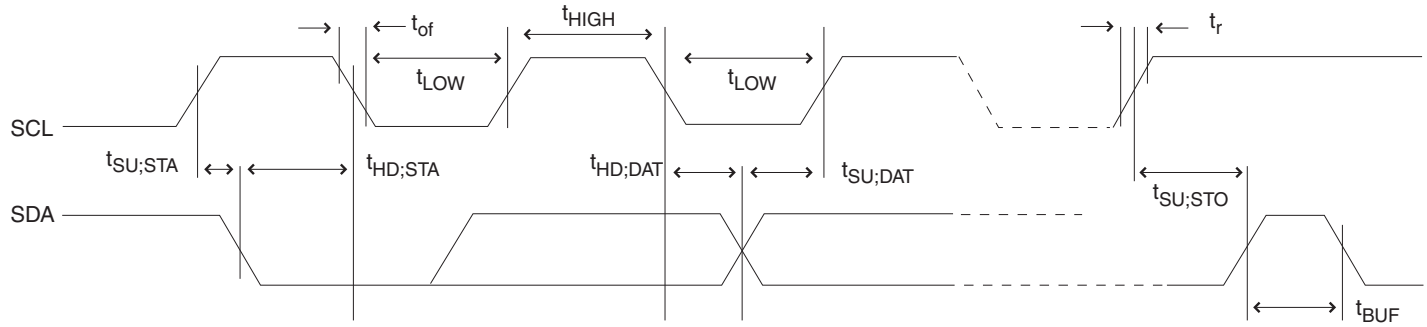

26.10 Serial Port Timing: Shift Register Mode

The values in this table are valid for V_{DD} = 2.4V to 3.6V and Load Capacitance = 80 pF.

Symbol	Parameter	SMOD1 = 0		SMOD1 = 1		Units
		Min	Max	Min	Max	
t_{XLXL}	Serial Port Clock Cycle Time	$4t_{CLCL}$ -15		$2t_{CLCL}$ -15		µs
t_{QVXH}	Output Data Setup to Clock Rising Edge	$3t_{CLCL}$ -15		t_{CLCL} -15		ns
t_{XHQX}	Output Data Hold after Clock Rising Edge	t_{CLCL} -15		t_{CLCL} -15		ns
t_{XHDX}	Input Data Hold after Clock Rising Edge	0		0		ns
t_{XHDV}	Input Data Valid to Clock Rising Edge	15		15		ns

Figure 26-22. Shift Register Mode Timing Waveform

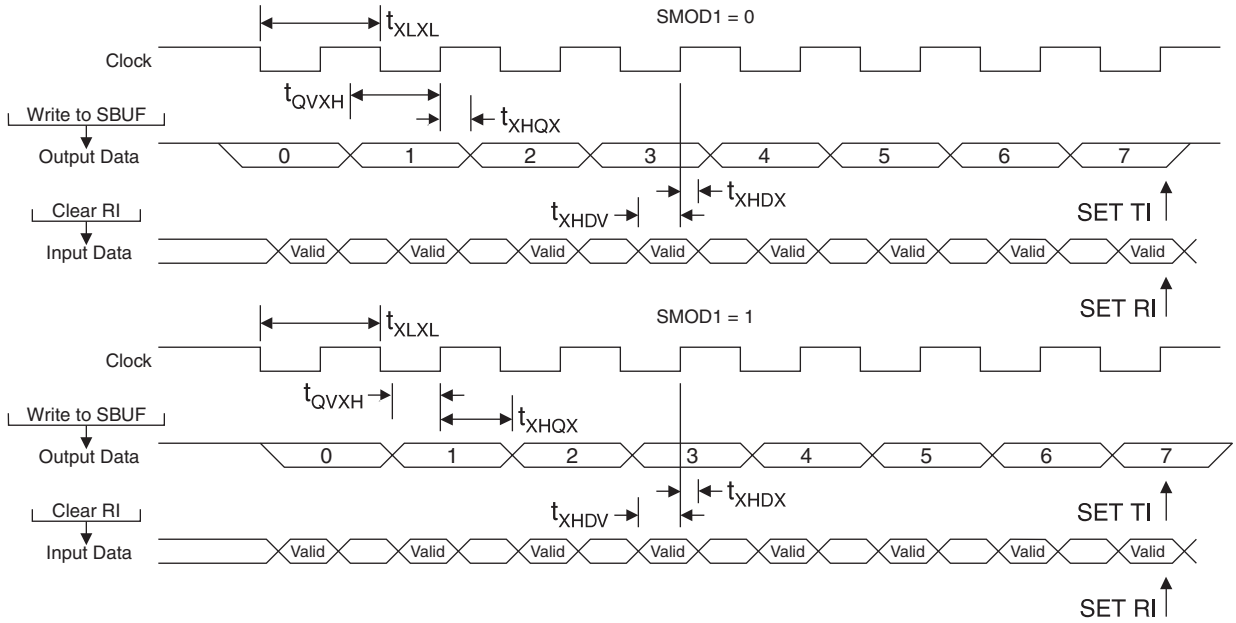

26.11 Dual Analog Comparator Characteristics

The values shown in this table are valid for T_A = -40°C to 85°C and V_{DD} = 2.4 to 3.6V, unless otherwise noted.

Table 26-8. Dual Analog Comparator Characteristics

Symbol	Parameter	Condition	Min	Max	Units
V_{CM}	Common Mode Input Voltage		GND	V_{DD}	V
V_{OS}	Input Offset Voltage	V_{DD} = 3.6V		20	mV
V_{AREF}	Analog Reference Voltage		1.23	1.36	V
$V_{\Delta REF}$	Reference Delta Voltage		90	120	mV
t_{CMP}	Comparator Propagation Delay	$V_{IN+} - V_{IN-}$ = 20mV; V_{DD} = 2.4V		200	ns
t_{AREF}	Reference Settling Time		3		µs

Figure 26-23. Analog Reference Voltage Typical Characteristics

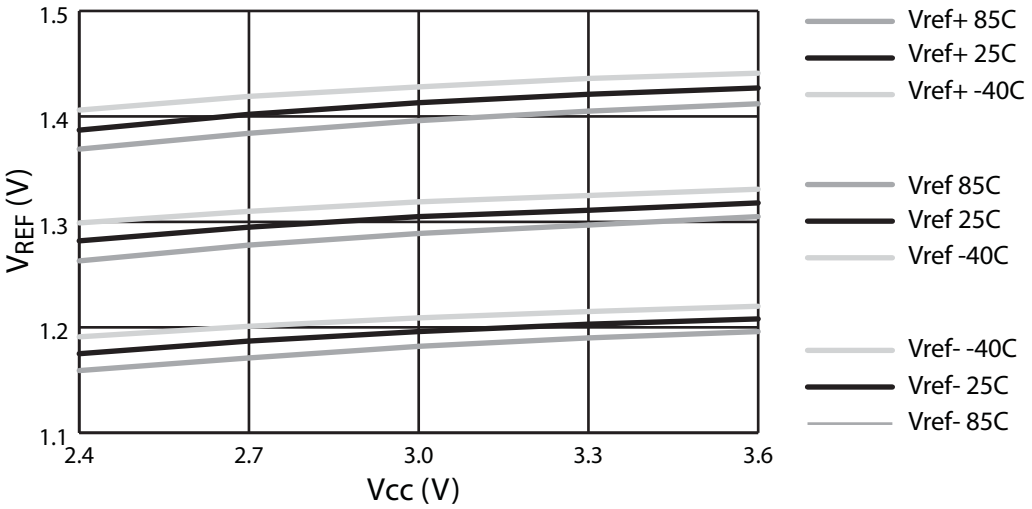

26.12 DADC Characteristics

The values shown in these tables are valid for T_A = -40°C to 85°C and V_{DD} = 2.4 to 3.6V, unless otherwise noted.

Table 26-9. ADC Characteristics

Symbol	Parameter	Condition	Min	Typical	Max	Units
	Resolution				10	Bits
	Absolute Accuracy (including INL, DNL, quantization error, gain and offset error)			4		LSB
	Integral Non-Linearity (INL)			4		LSB
	DIfferential Non-Linearity (DNL)			4		LSB
	Gain Error			16		LSB
	Offset Error			16		LSB
t_{ACK}	Clock Period		500			ns
t_{ADC}	Conversion Time		$13t_{ACK}$		$14t_{ACK}$ + $2t_{CLCL}$	ns
V_{REF}	Reference Voltage	External Reference	$V_{DD}/2$ - 0.2	$V_{DD}/2$	$V_{DD}/2$ + 0.2	V
		Internal Reference	0.9	1.0	1.1	V
V_{IN}	Single-Ended Input Voltage		$V_{DD}/2$ - V_{REF}		$V_{DD}/2$ + V_{REF}	V
V_{CMI}	Differential Input Common Mode Voltage		GND		V_{DD}	V
V_{DI}	Differential Input Voltage		0		$\pm V_{REF}$	V
R_{IN}	Analog Input Resistance			10		kΩ
R_{MUX}	Analog Mux Resistance			10		kΩ
$C_{S/H}$	Sample & Hold Capacitance			3		pF

.

Table 26-10. DAC Characteristics

Symbol	Parameter	Condition	Min	Typical	Max	Units
	Resolution				10	Bits
t_{ACK}	Clock Period	$t_{ACK} \geq t_{CLCL}$	500			ns
t_{DAC}	Conversion Time		$11t_{ACK}$		$12t_{ACK}$ + $2t_{CLCL}$	ns
V_{REF}	Reference Voltage	External Reference	$V_{DD}/2$ - 0.2	$V_{DD}/2$	$V_{DD}/2$ + 0.2	V
		Internal Reference	0.9	1.0	1.1	V
V_{IN}	Single-Ended Input Voltage		$V_{DD}/2$ - V_{REF}		$V_{DD}/2$ + V_{REF}	V
V_{CMO}	Differential Output Common Mode Voltage		$V_{DD}/2$ - 0.2	$V_{DD}/2$	$V_{DD}/2$ + 0.2	V
V_{DO}	Differential Output Voltage		0		$\pm V_{REF}$	V
R_{OUT}	Analog Output Resistance		100		200	kΩ

26.13 Test Conditions

26.13.1 AC Testing Input/Output Waveform

Figure 26-24. AC Testing Input/Output Waveform[1]

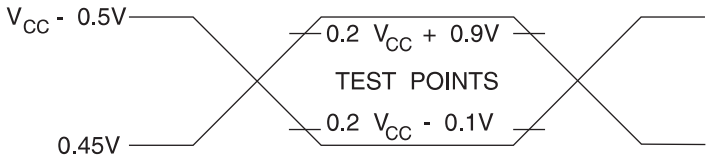

Note: 1. AC Inputs during testing are driven at V_{DD} - 0.5V for a logic “1” and 0.45V for a logic “0”. Timing measurements are made at V_{IH} min. for a logic “1” and V_{IL} max. for a logic “0”.

26.13.2 Float Waveform

Figure 26-25. Float Waveform[1]

Note: 1. For timing purposes, a port pin is no longer floating when a 100 mV change from load voltage occurs. A port pin begins to float when 100 mV change from the loaded V_{OH}/V_{OL} level occurs.

26.13.3 I_{CC} Test Condition: Active Mode

Figure 26-26. Connection Diagram for I_{CC} Active Measurement. All Other Pins are Disconnected

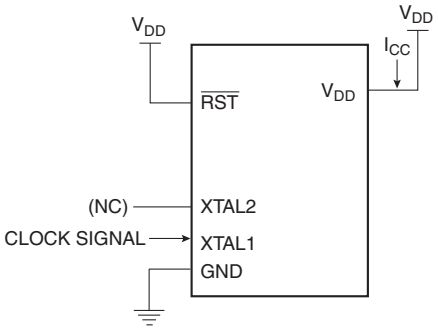

For active supply current measurements all ports are configured in quasi-bidirectional mode. Timers 0, 1 and 2 are configured to be free running in their default timer modes. The CPU executes a simple random number generator that accesses RAM, the SFR bus and exercises the ALU and hardware multiplier.

26.13.4 I_{CC} Test Condition: Idle Mode

Figure 26-27. Connection Diagram for I_{CC} Idle Measurement. All Other Pins are Disconnected

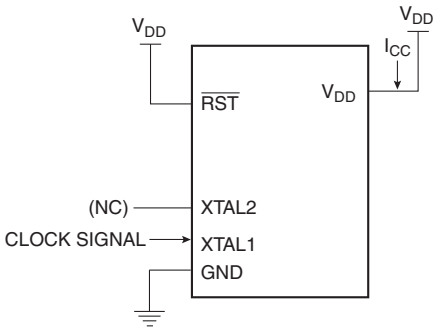

26.13.5 Clock Signal Waveform for I_{CC} Tests

Figure 26-28. Clock Signal Waveform for I_{CC} in Active and Idle Modes, $t_{CLCH} = t_{CHCL} = 5$ ns

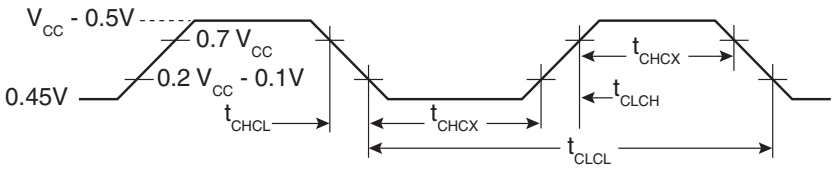

26.13.6 I_{CC} Test Condition: Power-down Mode

Figure 26-29. Connection Diagram for I_{CC} Power-down Measurement.All Other Pins are Disconnected, V_{DD} = 2V to 3.6V

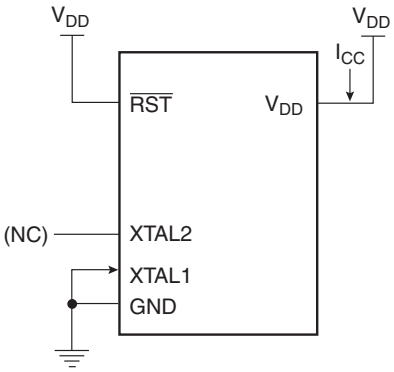

27. Ordering Information

27.1 Green Package Option (Pb/Halide-free)

Code Flash	Speed (MHz)	Power Supply	Ordering Code	Package	Operation Range
32KB	20	2.4V to 3.6V	AT89LP3240-20AU AT89LP3240-20PU AT89LP3240-20JU AT89LP3240-20MU	44A 40P6 44J 44M1	Industrial (-40° C to 85° C)
64KB	20	2.4V to 3.6V	AT89LP6440-20AU AT89LP6440-20PU AT89LP6440-20JU AT89LP6440-20MU	44A 40P6 44J 44M1	

Package Types	
44A	44-lead, Thin Plastic Quad Flat Package (TQFP)
40P6	40-lead, 0.600” Wide, Plastic Dual Inline Package (PDIP)
44J	44-lead, Plastic J-leaded Chip Carrier (PLCC)
44M1	44-pad, 7 x 7 x 1.0 mm Body, Plastic Very Thin Quad Flat No Lead Package (VQFN/MLF)

28. Packaging Information

28.1 44A – TQFP

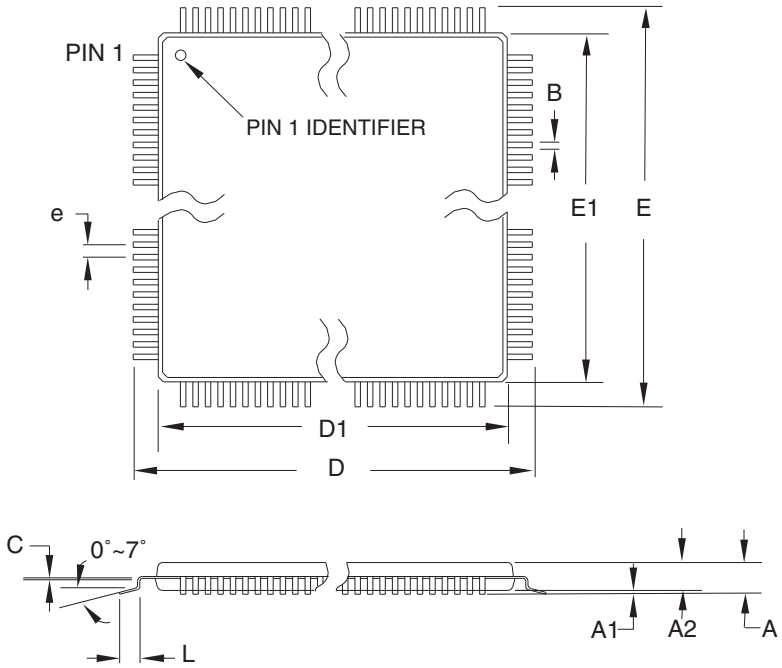

COMMON DIMENSIONS
(Unit of Measure = mm)

SYMBOL	MIN	NOM	MAX	NOTE
A	–	–	1.20	
A1	0.05	–	0.15	
A2	0.95	1.00	1.05	
D	11.75	12.00	12.25	
D1	9.90	10.00	10.10	Note 2
E	11.75	12.00	12.25	
E1	9.90	10.00	10.10	Note 2
B	0.30	–	0.45	
C	0.09	–	0.20	
L	0.45	–	0.75	
e	0.80 TYP			

Notes:
1. This package conforms to JEDEC reference MS-026, Variation ACB.
2. Dimensions D1 and E1 do not include mold protrusion. Allowable protrusion is 0.25 mm per side. Dimensions D1 and E1 are maximum plastic body size dimensions including mold mismatch.
3. Lead coplanarity is 0.10 mm maximum.

10/5/2001

	TITLE	DRAWING NO.	REV.
2325 Orchard Parkway San Jose, CA 95131	**44A,** 44-lead, 10 x 10 mm Body Size, 1.0 mm Body Thickness, 0.8 mm Lead Pitch, Thin Profile Plastic Quad Flat Package (TQFP)	44A	B

28.2 40P6 – PDIP

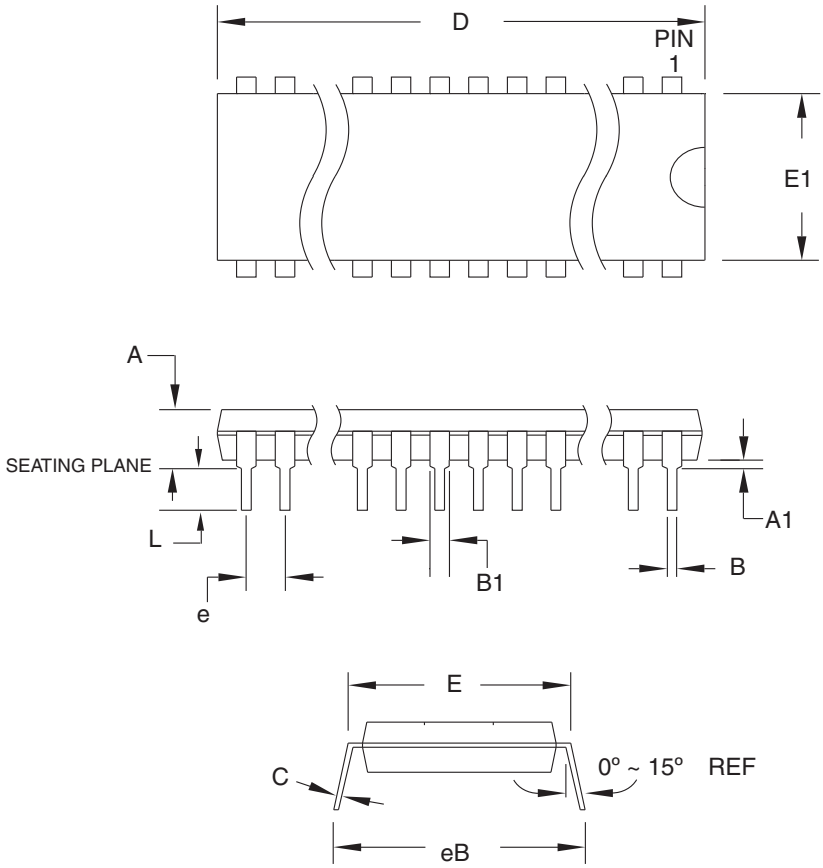

COMMON DIMENSIONS
(Unit of Measure = mm)

SYMBOL	MIN	NOM	MAX	NOTE
A	–	–	4.826	
A1	0.381	–	–	
D	52.070	–	52.578	Note 2
E	15.240	–	15.875	
E1	13.462	–	13.970	Note 2
B	0.356	–	0.559	
B1	1.041	–	1.651	
L	3.048	–	3.556	
C	0.203	–	0.381	
eB	15.494	–	17.526	
e	2.540 TYP			

Notes:
1. This package conforms to JEDEC reference MS-011, Variation AC.
2. Dimensions D and E1 do not include mold Flash or Protrusion. Mold Flash or Protrusion shall not exceed 0.25 mm (0.010").

09/28/01

	TITLE	DRAWING NO.	REV.
2325 Orchard Parkway San Jose, CA 95131	**40P6**, 40-lead (0.600"/15.24 mm Wide) Plastic Dual Inline Package (PDIP)	40P6	B

28.3 44J – PLCC

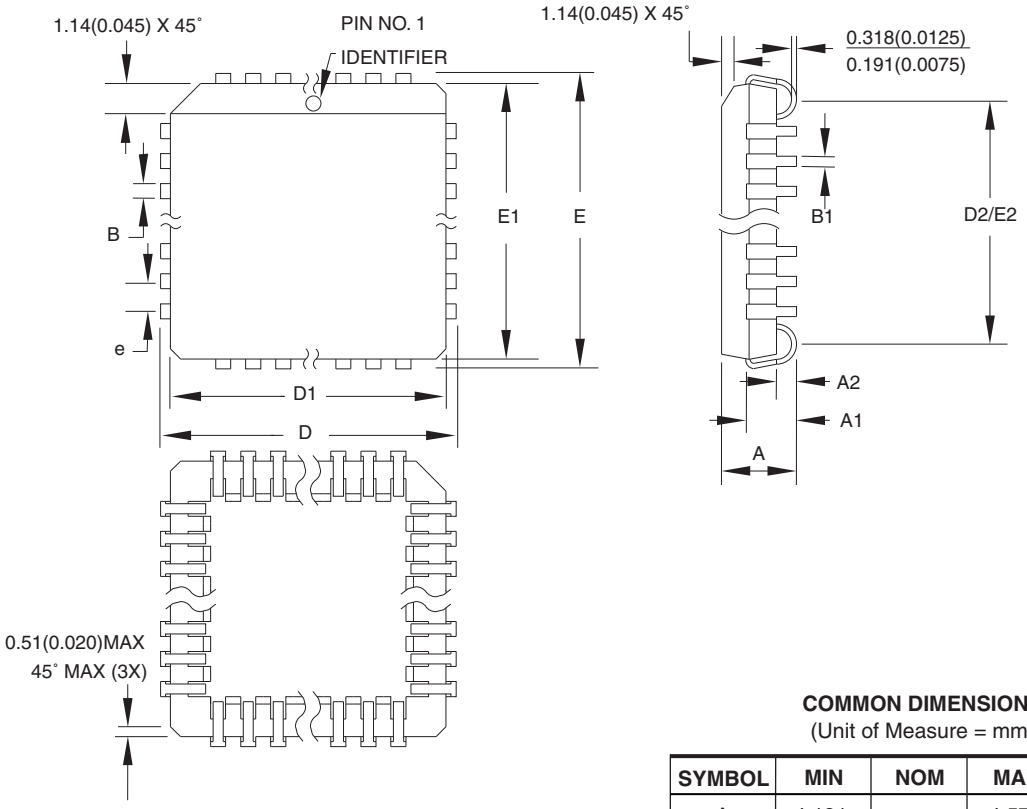

COMMON DIMENSIONS
(Unit of Measure = mm)

SYMBOL	MIN	NOM	MAX	NOTE
A	4.191	–	4.572	
A1	2.286	–	3.048	
A2	0.508	–	–	
D	17.399	–	17.653	
D1	16.510	–	16.662	Note 2
E	17.399	–	17.653	
E1	16.510	–	16.662	Note 2
D2/E2	14.986	–	16.002	
B	0.660	–	0.813	
B1	0.330	–	0.533	
e	1.270 TYP			

Notes:
1. This package conforms to JEDEC reference MS-018, Variation AC.
2. Dimensions D1 and E1 do not include mold protrusion. Allowable protrusion is .010"(0.254 mm) per side. Dimension D1 and E1 include mold mismatch and are measured at the extreme material condition at the upper or lower parting line.
3. Lead coplanarity is 0.004" (0.102 mm) maximum.

10/04/01

	TITLE	DRAWING NO.	REV.
2325 Orchard Parkway San Jose, CA 95131	**44J**, 44-lead, Plastic J-leaded Chip Carrier (PLCC)	44J	B

28.4 44M1 – VQFN/MLF

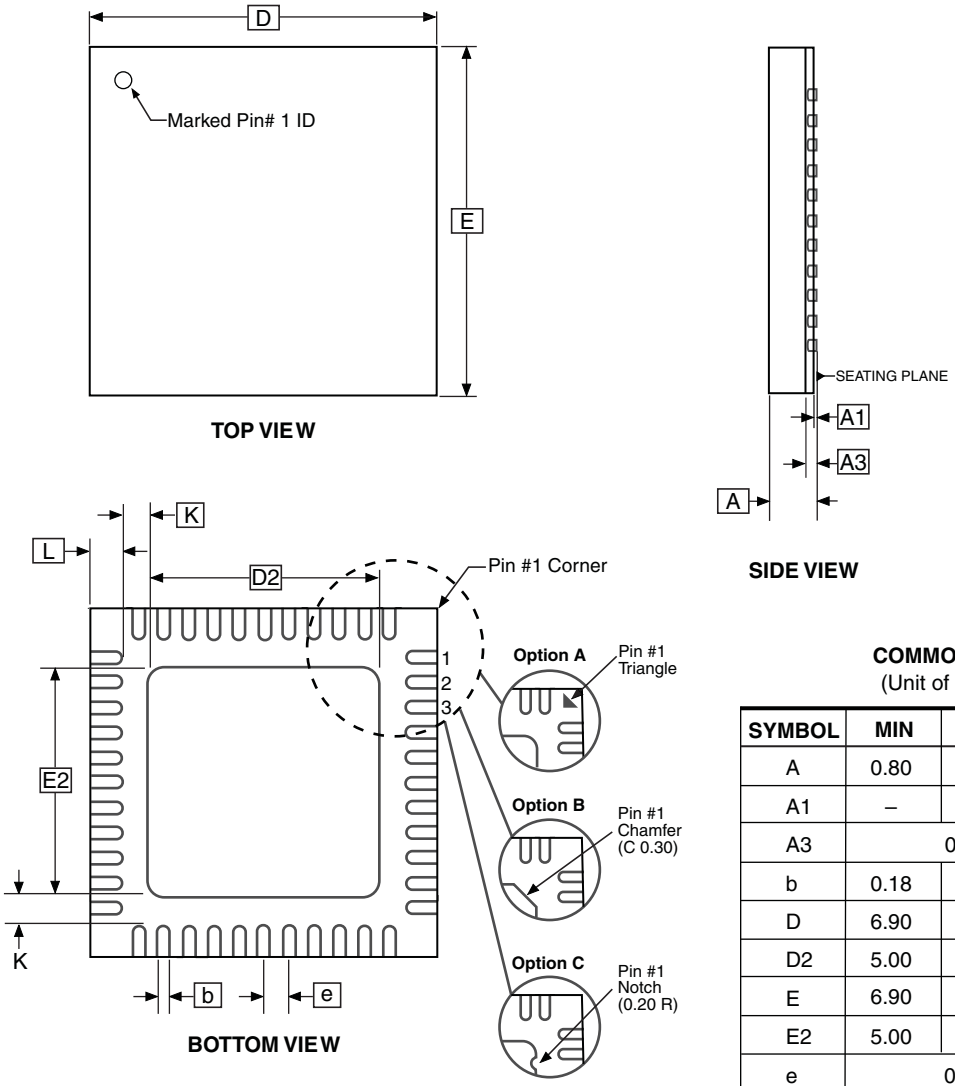

Note: JEDEC Standard MO-220, Fig. 1 (SAW Singulation) VKKD-3.

COMMON DIMENSIONS
(Unit of Measure = mm)

SYMBOL	MIN	NOM	MAX	NOTE
A	0.80	0.90	1.00	
A1	–	0.02	0.05	
A3		0.20 REF		
b	0.18	0.23	0.30	
D	6.90	7.00	7.10	
D2	5.00	5.20	5.40	
E	6.90	7.00	7.10	
E2	5.00	5.20	5.40	
e		0.50 BSC		
L	0.59	0.64	0.69	
K	0.20	0.26	0.41	

9/26/08

	TITLE	GPC	DRAWING NO.	REV.
Package Drawing Contact: packagedrawings@atmel.com	**44M1,** 44-pad, 7 x 7 x 1.0 mm Body, Lead Pitch 0.50 mm, 5.20 mm Exposed Pad, Thermally Enhanced Plastic Very Thin Quad Flat No Lead Package (VQFN)	ZWS	44M1	H

29. Revision History

Revision No.	History
Revision A – September 2009	• Initial Release
Revision B– September 2010	• Removed Preliminary status • Updated "DC Characteristics" on page 170 • Updated "Typical Characteristics" on page 171 • Renamed AVDD to VDD
Revision C– February 2011	• Added section "System Configuration" on page 8 • Added the AT89LP3240 device • Updated oscillator connection diagram, Figure 6-1 on page 31

Table of Contents

Features ***1***

1 Pin Configurations ***2***

1.1 40P6: 40-lead PDIP 2

1.2 44A: 44-lead TQFP (Top View) 2

1.3 44J: 44-lead PLCC 3

1.4 44M1: 44-pad VQFN/MLF 3

1.5 Pin Description 4

2 Overview ***6***

2.1 Block Diagram 7

2.2 System Configuration 8

2.3 Comparison to Standard 8051 9

3 Memory Organization ***11***

3.1 Program Memory 11

3.2 Internal Data Memory 12

3.3 External Data Memory 13

3.4 Extended Stack 20

3.5 In-Application Programming (IAP) 21

4 Special Function Registers ***22***

5 Enhanced CPU ***23***

5.1 Multiply–Accumulate Unit (MAC) 24

5.2 Enhanced Dual Data Pointers 25

5.3 Instruction Set Extensions 30

6 System Clock ***31***

6.1 Crystal Oscillator 31

6.2 External Clock Source 32

6.3 Internal RC Oscillator 32

6.4 System Clock Out 32

6.5 System Clock Divider 32

7 Reset ***33***

7.1 Power-on Reset 33

7.2 Brown-out Reset 35

7.3 External Reset 35

Table of Contents (Continued)

7.4 Watchdog Reset 36

7.5 Software Reset 36

8 Power Saving Modes 36

8.1 Idle Mode 36

8.2 Power-down Mode 37

8.3 Reducing Power Consumption 38

9 Interrupts 39

9.1 Interrupt Response Time 41

10 I/O Ports 45

10.1 Port Configuration 45

10.2 Port Analog Functions 48

10.3 Port Read-Modify-Write 48

10.4 Port Alternate Functions 49

11 Enhanced Timer 0 and Timer 1 with PWM 51

11.1 Mode 0 – Variable Width Timer/Counter 52

11.2 Mode 1 – 16-bit Auto-Reload Timer/Counter 52

11.3 Mode 2 – 8-bit Auto-Reload Timer/Counter 53

11.4 Mode 3 – 8-bit Split Timer 53

11.5 Pulse Width Modulation 56

12 Enhanced Timer 2 60

12.1 Timer 2 Registers 61

12.2 Capture Mode 62

12.3 Auto-Reload Mode 63

12.4 Baud Rate Generator 67

12.5 Frequency Generator (Programmable Clock Out) 68

13 Compare/Capture Array 69

13.1 CCA Registers 70

13.2 Input Capture Mode 72

13.3 Output Compare Mode 75

13.4 Pulse Width Modulation Mode 77

14 External Interrupts 82

15 General-purpose Interrupts 83

Table of Contents (Continued)

16 Serial Interface (UART) 85

16.1 Multiprocessor Communications 85
16.2 Baud Rates 87
16.3 More About Mode 0 89
16.4 More About Mode 1 92
16.5 More About Modes 2 and 3 94
16.6 Framing Error Detection 97
16.7 Automatic Address Recognition 97

17 Enhanced Serial Peripheral Interface 98

17.1 Master Operation 100
17.2 Slave Operation 101
17.3 Pin Configuration 101
17.4 Serial Clock Timing 104

18 Two-Wire Serial Interface 105

18.1 Data Transfer and Frame Format 106
18.2 Multi-master Bus Systems, Arbitration and Synchronization 108
18.3 Overview of the TWI Module 110
18.4 Register Overview 112
18.5 Using the TWI 113
18.6 Transmission Modes 115

19 Dual Analog Comparators 126

19.1 Analog Input Muxes 127
19.2 Internal Reference Voltage 128
19.3 Comparator Interrupt Debouncing 128

20 Digital-to-Analog/Analog-to-Digital Converter 133

20.1 ADC Operation 135
20.2 DAC Operation 136
20.3 Clock Selection 137
20.4 Starting a Conversion 137
20.5 Noise Considerations 138

21 Programmable Watchdog Timer 141

21.1 Software Reset 142

Table of Contents (Continued)

22 Instruction Set Summary 143

22.1 Instruction Set Extensions 147

23 Register Index 153

24 On-Chip Debug System 155

24.1 Physical Interface 155

24.2 Software Breakpoints 156

24.3 Limitations of On-Chip Debug 156

25 Programming the Flash Memory 157

25.1 Physical Interface 157

25.2 Memory Organization 159

25.3 Command Format 160

25.4 Status Register 163

25.5 DATA Polling 163

25.6 Flash Security 163

25.7 User Configuration Fuses 164

25.8 User Signature and Analog Configuration 165

25.9 Programming Interface Timing 165

26 Electrical Characteristics 170

26.1 Absolute Maximum Ratings* 170

26.2 DC Characteristics 170

26.3 Safe Operating Conditions 171

26.4 Typical Characteristics 171

26.5 Clock Characteristics 175

26.6 Reset Characteristics 178

26.7 External Data Memory Characteristics 178

26.8 Serial Peripheral Interface Timing 179

26.9 Two-wire Serial Interface Characteristics 182

26.10 Serial Port Timing: Shift Register Mode 183

26.11 Dual Analog Comparator Characteristics 184

26.12 DADC Characteristics 185

26.13 Test Conditions 186

27 Ordering Information 188

27.1 Green Package Option (Pb/Halide-free) 188

Table of Contents (Continued)

28 Packaging Information 189

28.1 44A – TQFP 189

28.2 40P6 – PDIP 190

28.3 44J – PLCC 191

28.4 44M1 – VQFN/MLF 192

29 Revision History 193

Table of Contents i

Atmel Corporation
2325 Orchard Parkway
San Jose, CA 95131
USA
Tel: (+1) (408) 441-0311
Fax: (+1) (408) 487-2600
www.atmel.com
8051@atmel.com

Atmel Asia Limited
Unit 1-5 & 16, 19/F
BEA Tower, Millennium City 5
418 Kwun Tong Road
Kwun Tong, Kowloon
HONG KONG
Tel: (+852) 2245-6100
Fax: (+852) 2722-1369

Atmel Munich GmbH
Business Campus
Parkring 4
D-85748 Garching b. Munich
GERMANY
Tel: (+49) 89-31970-0
Fax: (+49) 89-3194621

Atmel Japan
9F, Tonetsu Shinkawa Bldg.
1-24-8 Shinkawa
Chuo-ku, Tokyo 104-0033
JAPAN
Tel: (+81) (3) 3523-3551
Fax: (+81) (3) 3523-7581

© 2011 Atmel Corporation. All rights reserved.

Atmel®, Atmel logo and combinations thereof, and others are registered trademarks or trademarks of Atmel Corporation or its subsidiaries. Other terms and product names may be trademarks of others.

Disclaimer: The information in this document is provided in connection with Atmel products. No license, express or implied, by estoppel or otherwise, to any intellectual property right is granted by this document or in connection with the sale of Atmel products. **EXCEPT AS SET FORTH IN ATMEL'S TERMS AND CONDITIONS OF SALE LOCATED ON ATMEL'S WEB SITE, ATMEL ASSUMES NO LIABILITY WHATSOEVER AND DISCLAIMS ANY EXPRESS, IMPLIED OR STATUTORY WARRANTY RELATING TO ITS PRODUCTS INCLUDING, BUT NOT LIMITED TO, THE IMPLIED WARRANTY OF MERCHANTABILITY, FITNESS FOR A PARTICULAR PURPOSE, OR NON-INFRINGEMENT. IN NO EVENT SHALL ATMEL BE LIABLE FOR ANY DIRECT, INDIRECT, CONSEQUENTIAL, PUNITIVE, SPECIAL OR INCIDENTAL DAMAGES (INCLUDING, WITHOUT LIMITATION, DAMAGES FOR LOSS OF PROFITS, BUSINESS INTERRUPTION, OR LOSS OF INFORMATION) ARISING OUT OF THE USE OR INABILITY TO USE THIS DOCUMENT, EVEN IF ATMEL HAS BEEN ADVISED OF THE POSSIBILITY OF SUCH DAMAGES.** Atmel makes no representations or warranties with respect to the accuracy or completeness of the contents of this document and reserves the right to make changes to specifications and product descriptions at any time without notice. Atmel does not make any commitment to update the information contained herein. Unless specifically provided otherwise, Atmel products are not suitable for, and shall not be used in, automotive applications. Atmel's products are not intended, authorized, or warranted for use as components in applications intended to support or sustain life.

3706C–MICRO–2/11