THIS DRAWING IS UNPUBLISHED. RELEASED FOR PUBLICATION ,19 .
© COPYRIGHT 19 BY AMP INCORPORATED. ALL RIGHTS RESERVED.

| LOC | DIST |
|---|---|
| CE | 16 |

REVISIONS

| P | LTR | DESCRIPTION | DATE | DWN | APVD |
|---|---|---|---|---|---|
| | V | REV PER 0A00-0261-01 | 1-3-02 | KG | SB |

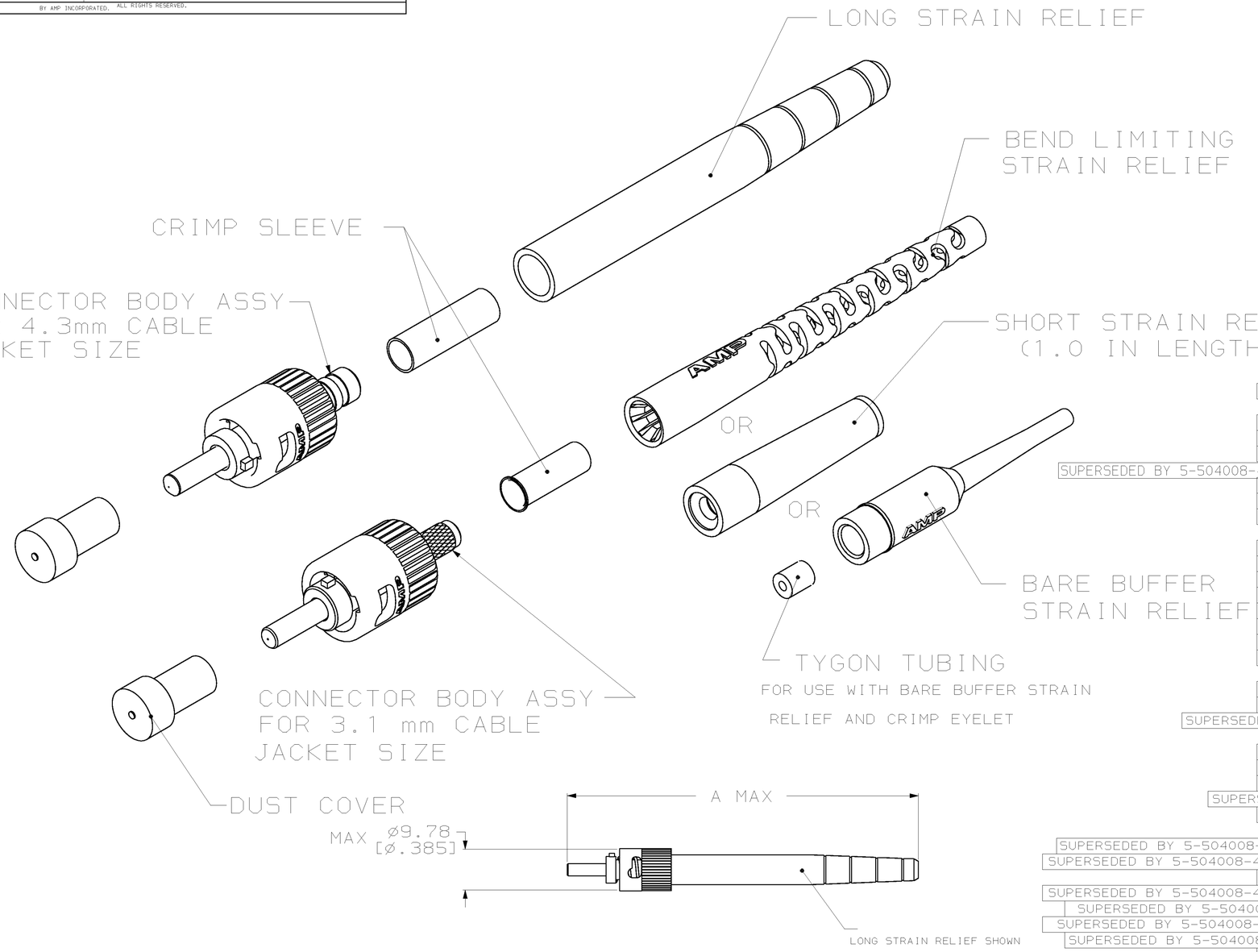


| DESCRIPTION | A MAX |
|---|---|
| LONG STRAIN RELIEF | 73.7[2.90] |
| BEND LIMITING STRAIN RELIEF | 77.6[3.06] |
| SHORT STRAIN RELIEF(1.0 IN) | 48.8[1.92] |
| BARE BUFFER STRAIN RELIEF | 56.6[2.23] |

| | MAX CABLE O.D. | HOLE SIZE | PART NUMBER |
|---|---|---|---|
| ~~OBSOLETE 5 3~~ | ~~3.1mm~~ | ~~180µm~~ | ~~5-504008-5~~ |
| 10 3 1 | 3.1mm | 125µm | 5-504008-4 |
| ~~OBSOLETE 5 3~~ | ~~3.1mm~~ | ~~500µm~~ | ~~5-504008-3~~ |
| ~~OBSOLETE 5 3~~ | ~~3.1mm~~ | ~~400µm~~ | ~~5-504008-2~~ |
| ~~OBSOLETE 5 3~~ | ~~3.1mm~~ | ~~267µm~~ | ~~5-504008-1~~ |
| SUPERSEDED BY 5-504008-4 PLUS 502128-8 13 2 1 | 3.1mm | 125µm | 5-504008-0 |
| ~~OBSOLETE 13 2 1~~ | ~~3.1mm~~ | ~~140µm~~ | ~~4-504008-9~~ |
| ~~OBSOLETE 6 3 1~~ | ~~3.1mm~~ | ~~140µm~~ | ~~4-504008-8~~ |
| ~~OBSOLETE 6 3~~ | ~~3.1mm~~ | ~~140µm~~ | ~~4-504008-7~~ |
| 5 3 | 3.1mm | 280µm | 4-504008-6 |
| ~~OBSOLETE 12 3~~ | ~~4.3mm~~ | ~~600µm~~ | ~~4-504008-5~~ |
| ~~OBSOLETE 5 2 1~~ | ~~3.1mm~~ | ~~436µm~~ | ~~4-504008-4~~ |
| ~~OBSOLETE 5 3~~ | ~~3.1mm~~ | ~~250µm~~ | ~~4-504008-3~~ |
| ~~OBSOLETE 5 3~~ | ~~3.1mm~~ | ~~160µm~~ | ~~4-504008-2~~ |
| ~~OBSOLETE 5 2~~ | ~~3.1mm~~ | ~~231µm~~ | ~~4-504008-1~~ |
| ~~OBSOLETE 5 2 1~~ | ~~3.1mm~~ | ~~125µm~~ | ~~4-504008-0~~ |
| ~~OBSOLETE 5 3~~ | ~~3.1mm~~ | ~~229µm~~ | ~~3-504008-9~~ |
| ~~OBSOLETE 5 2~~ | ~~3.1mm~~ | ~~280µm~~ | ~~3-504008-8~~ |
| ~~OBSOLETE~~ | | ~~126µm~~ | ~~3-504008-7~~ |
| ~~OBSOLETE 4 3~~ | ~~3.1mm~~ | ~~140µm~~ | ~~3-504008-6~~ |
| ~~OBSOLETE 12 3~~ | ~~4.3mm~~ | ~~240µm~~ | ~~3-504008-5~~ |
| SUPERSEDED BY 1-504008-4 5 3 1 | 3.1mm | 231µm | 3-504008-4 |
| 12 3 | 4.3mm | .042in | 3-504008-3 |
| ~~OBSOLETE 5 3~~ | ~~3.1mm~~ | ~~640µm~~ | ~~3-504008-2~~ |
| ~~OBSOLETE 5 3~~ | ~~3.1mm~~ | ~~336µm~~ | ~~3-504008-1~~ |
| SUPERSEDED BY 504008-7 | 3.1mm | 140µm | 3-504008-0 |
| SUPERSEDED BY 504008-7 5 3 1 | 3.1mm | 140µm | 2-504008-9 |
| SUPERSEDED BY 504008-4 | 4.3mm | 125µm | 2-504008-8 |
| 12 3 1 | 4.3mm | 125µm | 2-504008-7 |
| SUPERSEDED BY 5-504008-4 PLUS 1-501457-2 11 3 | 3.1mm | 125µm | 2-504008-6 |
| SUPERSEDED BY 5-504008-4 PLUS 1-501457-2 11 3 1 | 3.1mm | 125µm | 2-504008-5 |
| ~~OBSOLETE 9 3~~ | ~~3.1mm~~ | ~~125µm~~ | ~~2-504008-4~~ |
| SUPERSEDED BY 5-504008-4 PLUS 1-502128-3 9 3 1 | 3.1mm | 125µm | 2-504008-3 |
| SUPERSEDED BY 5-504008-4 PLUS 501457-8 6 3 | 3.1mm | 125µm | 2-504008-2 |
| SUPERSEDED BY 5-504008-4 PLUS 501457-8 6 3 1 | 3.1mm | 125µm | 2-504008-1 |
| SUPERSEDED BY 5-504008-4 PLUS 1-502128-1 8 3 | 3.1mm | 125µm | 2-504008-0 |
| ~~OBSOLETE 8 3 1~~ | ~~3.1mm~~ | ~~125µm~~ | ~~1-504008-9~~ |
| SUPERSEDED BY 504008-3 | 3.1mm | 125µm | 1-504008-8 |
| 5 3 1 | 3.1mm | 125µm | 1-504008-7 |
| ~~OBSOLETE~~ | ~~4.3mm~~ | ~~410µm~~ | ~~1-504008-6~~ |
| ~~OBSOLETE~~ | ~~3.1mm~~ | ~~436µm~~ | ~~1-504008-5~~ |
| 5 3 | 3.1mm | 231µm | 1-504008-4 |
| 5 3 | 3.1mm | 240µm | 1-504008-3 |
| SUPERSEDED BY 5-504008-4 PLUS 501457-8 6 3 1 | 3.1mm | 125µm | 1-504008-2 |
| SUPERSEDED BY 5-504008-4 PLUS 501457-8 6 3 | 3.1mm | 125µm | 1-504008-1 |
| SUPERSEDED BY 5-504008-4 PLUS 1-503628-5 4 3 1 | 3.1mm | 125µm | 1-504008-0 |
| SUPERSEDED BY 5-504008-4 PLUS 1-503628-5 4 3 | 3.1mm | 125µm | 504008-9 |
| 12 3 | 4.3mm | 140µm | 504008-8 |
| 5 3 | 3.1mm | 140µm | 504008-7 |
| SUPERSEDED BY 504008-8 | 4.3mm | 140µm | 504008-6 |
| SUPERSEDED BY 504008-7 5 2 | 3.1mm | 140µm | 504008-5 |
| 12 3 | 4.3mm | 125µm | 504008-4 |
| 5 3 | 3.1mm | 125µm | 504008-3 |
| SUPERSEDED BY 504008-4 12 2 | 4.3mm | 125µm | 504008-2 |
| SUPERSEDED BY 504008-3 5 2 | 3.1mm | 125µm | 504008-1 |

1. BULK PACKAGED
2. FLAT END FACE
3. RADIUSED END FACE
4. BARE BUFFER STRAIN RELIEF, 900µm
5. BEND LIMITING STRAIN RELIEF (BLACK)
6. SHORT STRAIN RELIEF (1.0 INCH LENGTH) (BLACK)
8. BEND LIMITING STRAIN RELIEF (RED)
9. BEND LIMITING STRAIN RELIEF (BLUE)
10. NO STRAIN RELIEF
11. SHORT STRAIN RELIEF (1.0 INCH LG) (BLUE)
12. LONG STRAIN RELIEF (BLACK)
13. BEND LIMITING STRAIN RELIEF (BLUE, NO LOGO)
14. ALL KITS FOR 3.1mm MAX CABLE OD USE INSTRUCTION SHEET 408-4151.
15. ALL KITS FOR 4.3mm MAX CABLE OD USE INSTRUCTION SHEET 408-4162.

THIS DRAWING IS A CONTROLLED DOCUMENT.

DIMENSIONS: mm[INCHES]

TOLERANCES UNLESS OTHERWISE SPECIFIED:
0 PLC ±-
1 PLC ±-
2 PLC ±-
3 PLC ±-
4 PLC ±-
ANGLES ±-

MATERIAL: SST FERRULE, ALUM REAR BODY
FINISH: -

DWN P.YEAGER 3-26-94
CHK S.BUCHTER 3-26-94
APVD B.EDWARDS 3-26-94
PRODUCT SPEC -
APPLICATION SPEC -
WEIGHT -

AMP Incorporated
Harrisburg, PA 17105-3608

NAME: CONNECTOR KIT,SST,2.5mm BAYONET,OPTIMATE

| SIZE | CAGE CODE | DRAWING NO | RESTRICTED TO |
|---|---|---|---|
| A1 | 00779 | C-504008 | - |

CUSTOMER DRAWING

| SCALE | SHEET | OF | REV |
|---|---|---|---|
| - | 1 | 1 | V |