- 2.1 mm Height
- Industry Std. Footprint
- Pb Free/RoHS Compliant

HC-49USSX

Low Profile Crystal

OPERATING CONDITIONS / ELECTRICAL CHARACTERISTICS

PARAMETERS	CONDITIONS	HC-49USSX			UNITS
		MIN	TYP	MAX	
Frequency Range		3.57		50.000	MHz
Frequency Tolerance	at +25°C			± 30	ppm
Frequency Stability	-10 to +70°C			± 50	ppm
Shunt Capacitance				5	pF
Load Capacitance	Specify in P/N	10	20	Series	pF
Drive Level				500	µW
Operating Temperature		-10		+70	°C
Storage Temperature		-40		+105	°C
Aging (Per Year)	@ +25°C ±3°C			±5	ppm

EQUIVALENT SERIES RESISTANCE/MODE OF OSCILLATION

FREQUENCY RANGE (MHz)	MODE OF OSC	MAX ESR Ω	FREQUENCY RANGE (MHz)	MODE OF OSC	MAX ESR Ω
3.57 ~ 4.999	Fundamental	150	13.000 ~ 19.999	Fundamental	50
5.000 ~ 5.999	Fundamental	120	20.000 ~ 30.000	Fundamental	40
6.000 ~ 6.999	Fundamental	100	26.000 ~ 39.999	3rd Overtone	100
7.000 ~ 8.999	Fundamental	80	40.000 ~ 50.000	3rd Overtone	80
9.000 ~ 12.999	Fundamental	60			

DIMENSIONS (mm)

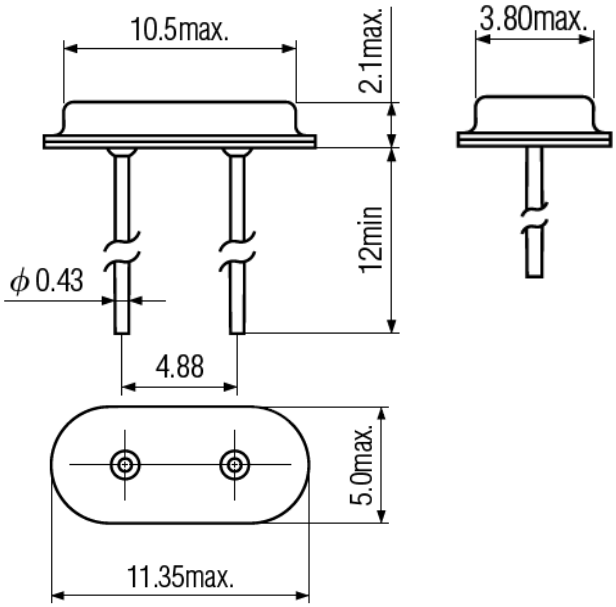

Figure 1) Top, Side and Bottom views

PART NUMBERING GUIDE: Example ECS-200-20-4VX

ECS - Frequency Abbreviation - Load Capacitance - Package

Frequency Abbreviation	Load Capacitance	Package
200 = 20.000 MHz See P/N Guide	20 =20 pF S=Series	4VX = HC-49USSX

1105 South Ridgeview Road • Olathe, KS 66062 • Phone: 913.782.7787 • Fax: 913.782.6991 • www.ecsxtal.com