DATE	DESCRIPTION	REV.

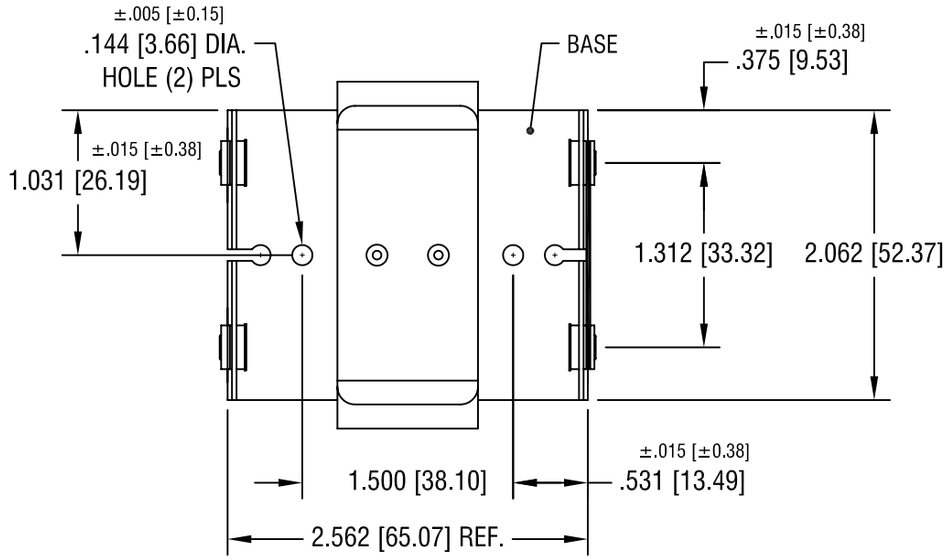

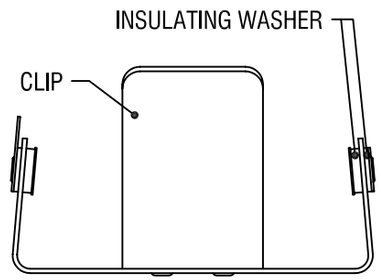

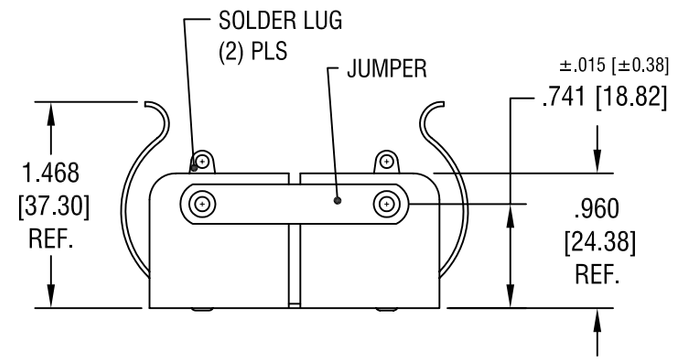

NOTES:

1. BASE: MAT'L - .032 [.81] TH'K ALUMINUM
   CLIP: MAT'L - .032 [.81] TH'K ALUMINUM
   SOLDER LUG: MAT'L - BRASS
   FINISH - TIN PLATE
   JUMPER: MAT'L - BRASS
   FINISH - TIN PLATE

THIS DOCUMENT IS THE PROPERTY OF KEYSTONE ELECTRONICS CORP. AND SHALL NOT BE REPRODUCED, DISTRIBUTED OR USED AS A BASIS FOR MANUFACTURE WITHOUT PRIOR WRITTEN PERMISSION FROM KEYSTONE ELECTRONICS CORP.

KEYSTONE ELECTRONICS CORP.
ASTORIA, N.Y. 11105-2017

PART NAME: BATTERY HOLDER, (2) 'D' CELLS			
MATERIAL: AS NOTED			
FINISH: AS NOTED	DRN BY: BOONE	DATE: 7.10.07	
	APP'D: LN	SCALE: .8X	
TOLERANCES INCH [MM] DECIMAL ± .010 [± 0.25] ANGULAR ± 1° UNLESS OTHERWISE SPECIFIED	CODE: C	DWG NO. 152	