THIS DRAWING IS UNPUBLISHED. RELEASED FOR PUBLICATION - , - .
© COPYRIGHT - By - ALL RIGHTS RESERVED.

LOC	DIST
GP	00

REVISIONS

P	LTR	DESCRIPTION	DATE	DWN	APVD
	A	REVISED PER ECO-14-011808	09AUG2014	AP	SB

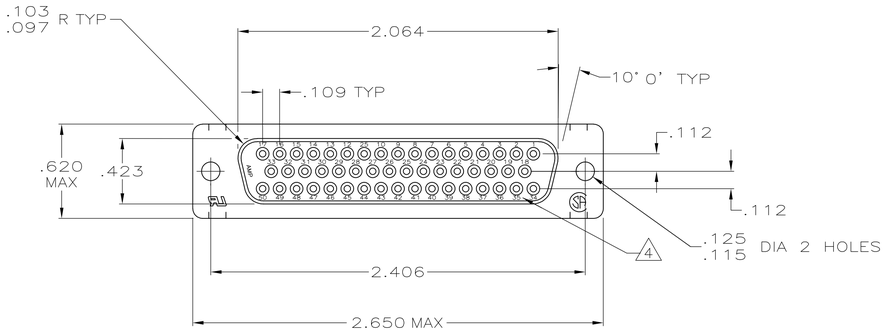

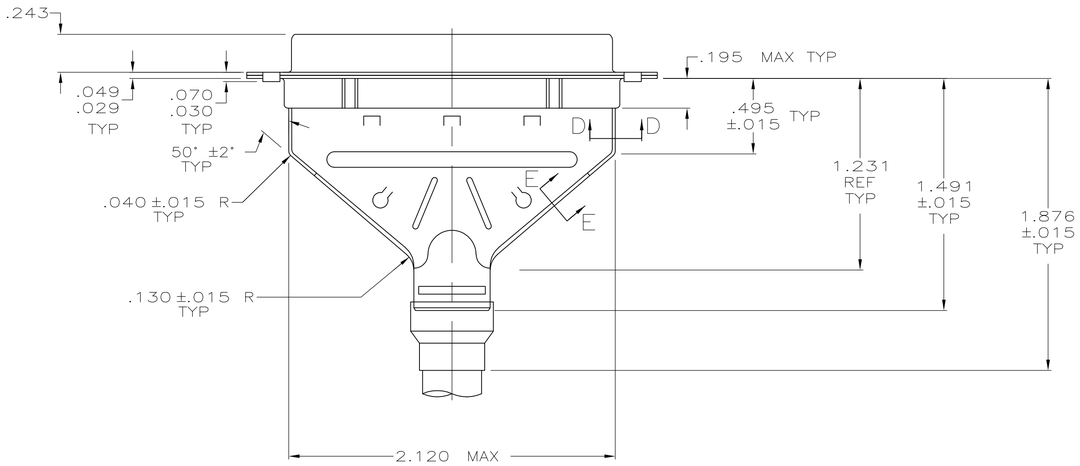

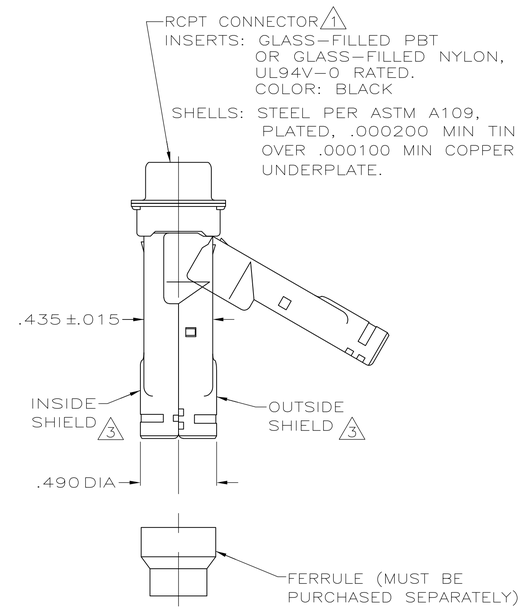

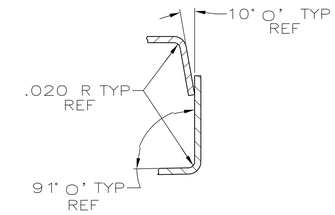

SECTION D-D

SCALE 4:1

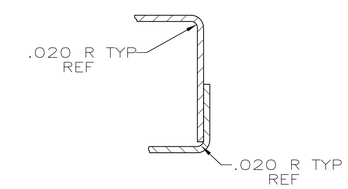

SECTION E-E

SCALE 4:1

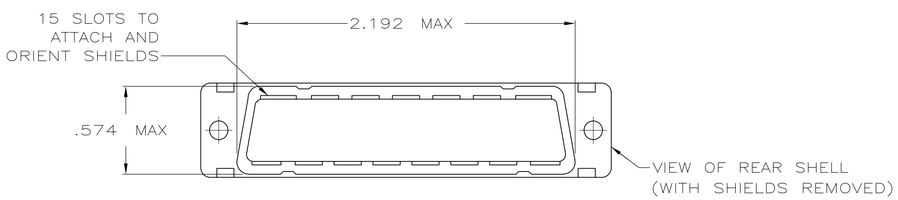

1. RCPT ACCEPTS SIZE 20 SOCKET CONTACTS (CONTACTS MUST BE ORDERED SEPARATELY).

2. ALL PARTS SHIPPED UNASSEMBLED, EACH PART INDIVIDUALLY BULK PACKED.

3. SHIELDS: MATERIAL-.020 THICK STEEL, PER ASTM A109, PLATED .000200 MIN TIN OVER .000100 MIN COPPER UNDERPLATE.

4. RAISED CAVITY IDENTIFICATION AND AMP TRADEMARK.

1658653-1

PART NUMBER

THIS DRAWING IS A CONTROLLED DOCUMENT.

DIMENSIONS: INCHES

TOLERANCES UNLESS OTHERWISE SPECIFIED:
0 PLC ± –
1 PLC ± –
2 PLC ± –
3 PLC ± .005
4 PLC ± –
ANGLES ± 0° 30'

MATERIAL: SEE CALL OUT 3

FINISH: SEE CALL OUT 3

DWN J.REITZEL 31JUL03
CHK S.BOLASH 31JUL03
APVD M.WALMSLEY 31JUL03

PRODUCT SPEC 108-40030
APPLICATION SPEC 114-40030
WEIGHT –

CUSTOMER DRAWING

TE Connectivity

NAME: KIT, RCPT, SHIELDING HARDWARE, SIZE 5, 50 POSN, AMPLIMITE HDP-20 TM

SIZE	CAGE CODE	DRAWING NO	RESTRICTED TO
A1	00779	C-1658653	–

SCALE 2:1 SHEET 1 OF 1 REV A

4805 (3/11)