THIS DRAWING IS UNPUBLISHED. RELEASED FOR PUBLICATION -,- .
© COPYRIGHT - BY TYCO ELECTRONICS CORPORATION. ALL RIGHTS RESERVED.

LOC	DIST
AD	00

REVISIONS

P	LTR	DESCRIPTION	DATE	DWN	APVD
	M3	REVISED PER ECO-10-003219	16FEB10	HMR	JO

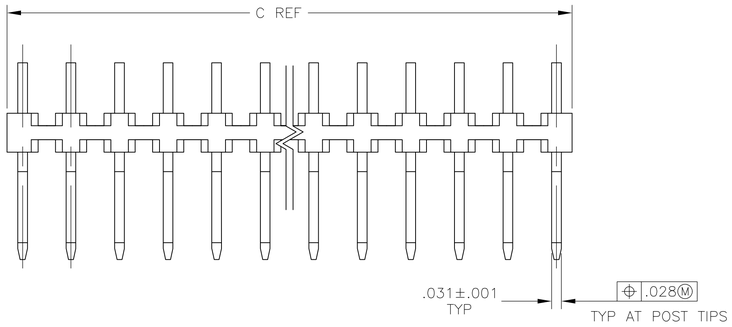

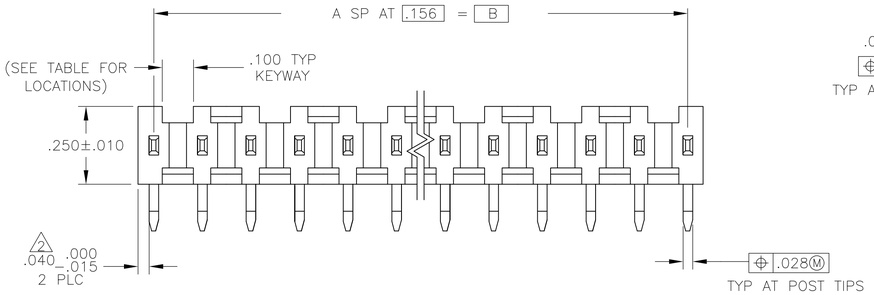

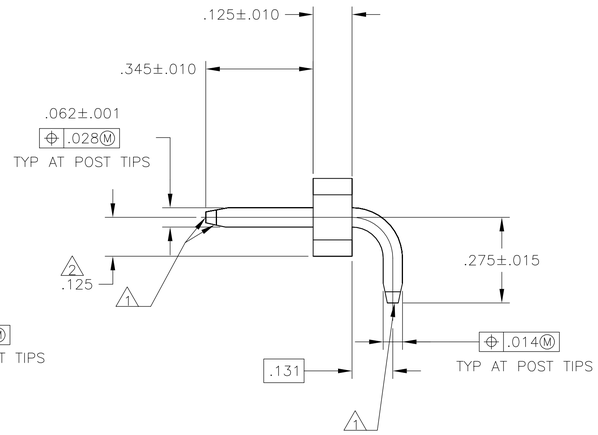

1. THE TIPS OF THE POSTS WILL NOT BE PLATED
2. THE NOTED DIMENSIONS APPLY AT THE INTERSECTION OF THE POST AND THE HOUSING
3. .000050-.000150 BRIGHT TIN LEAD.
4. .000050-.000150 MATTE TIN.
5. ROHS /95 /EC/ COMPLIANT
6. OBSOLETE PARTS: OBSOLETE CIS STREAMLINING PER D.RENAUD/D.SINISI

	4	A,C,E,H,K,M,Q,S,U,W,Y	11	3.855	3.744	24	25	5 7-87655-5
	4	A,C,E,G,J,L,N,Q,S,U,W,Y	12	3.699	3.588	23	24	5 7-87655-4
	4	A,D,G,K,N,R,U,X	8	3.543	3.432	22	23	5 7-87655-3
	4	A,C,E,G,J,L,N,Q,S,U,W	11	3.387	3.276	21	22	5 7-87655-2
	4	A,D,G,K,N,R,U	7	3.231	3.120	20	21	5 7-87655-1
	4	A,C,E,G,J,L,N,Q,S,U	10	3.075	2.964	19	20	5 7-87655-0
	4	B,D,F,J,L,N,Q,S	8	2.919	2.808	18	19	5 6-87655-9
6 OBSOLETE	4	A,D,F,J,M,P,S	7	2.763	2.652	17	18	5 6-87655-8
	4	A,D,G,K,N,R	6	2.607	2.496	16	17	5 6-87655-7
	4	A,C,E,G,J,L,N,Q	8	2.451	2.340	15	16	5 6-87655-6
	4	A,D,G,K,N	5	2.295	2.184	14	15	5 6-87655-5
	4	A,C,E,G,J,L,N	7	2.139	2.028	13	14	5 6-87655-4
	4	A,D,J,M	4	1.983	1.872	12	13	5 6-87655-3
	4	A,C,E,G,J,L	6	1.827	1.716	11	12	5 6-87655-2
	4	A,D,G,K	4	1.671	1.560	10	11	5 6-87655-1
	4	A,C,E,G,J	5	1.515	1.404	9	10	5 6-87655-0
	4	A,D,G	3	1.359	1.248	8	9	5 5-87655-9
	4	A,C,E,G	4	1.203	1.092	7	8	5 5-87655-8
6 OBSOLETE	4	A,C,E	3	1.047	.936	6	7	5 5-87655-7
	4	A,C,E	3	.891	.780	5	6	5 5-87655-6
	4	A,D	2	.735	.624	4	5	5 5-87655-5
	4	A,C	2	.579	.468	3	4	5 5-87655-4
6 OBSOLETE	4	A	1	.423	.312	2	3	5 5-87655-3
	4	A	1	.267	.156	1	2	5 5-87655-2
6 OBSOLETE	3	A,C,E,H,K,M,Q,S,U,W,Y	11	3.855	3.744	24	25	2-87655-5
	3	A,C,E,G,J,L,N,Q,S,U,W,Y	12	3.699	3.588	23	24	2-87655-4
	3	A,D,G,K,N,R,U,X	8	3.543	3.432	22	23	2-87655-3
	3	A,C,E,G,J,L,N,Q,S,U,W	11	3.387	3.276	21	22	2-87655-2
	3	A,D,G,K,N,R,U	7	3.231	3.120	20	21	2-87655-1
	3	A,C,E,G,J,L,N,Q,S,U	10	3.075	2.964	19	20	2-87655-0
	3	B,D,F,J,L,N,Q,S	8	2.919	2.808	18	19	1-87655-9
6 OBSOLETE	3	A,D,F,J,M,P,S	7	2.763	2.652	17	18	1-87655-8
	3	A,D,G,K,N,R	6	2.607	2.496	16	17	1-87655-7
	3	A,C,E,G,J,L,N,Q	8	2.451	2.340	15	16	1-87655-6
	3	A,D,G,K,N	5	2.295	2.184	14	15	1-87655-5
	3	A,C,E,G,J,L,N	7	2.139	2.028	13	14	1-87655-4
	3	A,D,J,M	4	1.983	1.872	12	13	1-87655-3
	3	A,C,E,G,J,L	6	1.827	1.716	11	12	1-87655-2
6 OBSOLETE	3	A,D,G,K	4	1.671	1.560	10	11	1-87655-1
	3	A,C,E,G,J	5	1.515	1.404	9	10	1-87655-0
6 OBSOLETE	3	A,D,G	3	1.359	1.248	8	9	87655-9
6 OBSOLETE	3	A,C,E,G	4	1.203	1.092	7	8	87655-8
	3	A,C,E	3	1.047	.936	6	7	87655-7
6 OBSOLETE	3	A,C,E	3	.891	.780	5	6	87655-6
	3	A,D	2	.735	.624	4	5	87655-5
6 OBSOLETE	3	A,C	2	.579	.468	3	4	87655-4
	3	A	1	.423	.312	2	3	87655-3
	3	A	1	.267	.156	1	2	87655-2
	FINISH	KEYWAY LOCATIONS	NO OF KEYWAY	C	B	A	NO OF POSN	ASSEMBLY PART NUMBER

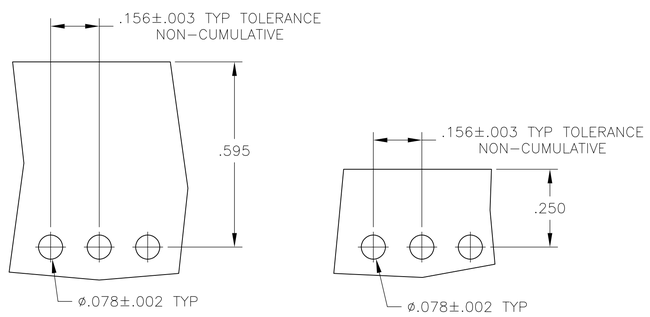

RECOMMENDED BOARD LAYOUTS

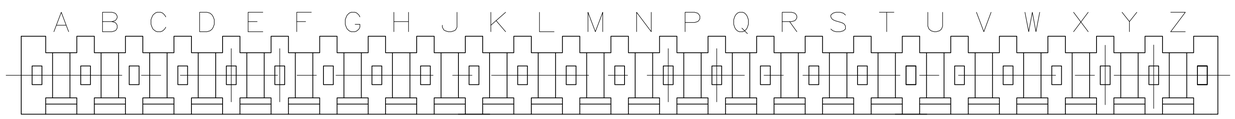

KEYWAY LOCATIONS (REF-SEE TABLE)
(MATING LENGTH OF POST ON NEAR SIDE)
SCALE 8:1

THIS DRAWING IS A CONTROLLED DOCUMENT.

DIMENSIONS: INCHES

TOLERANCES, UNLESS OTHERWISE SPECIFIED:
0 PLC ± -
1 PLC ± -
2 PLC ± -
3 PLC ± .005
4 PLC ± -
ANGLES ± -

MATERIAL: HOUSING FLAME RETARDANT THERMOPLASTIC, COLOR - BLACK; POSTS - BRASS

FINISH: SEE TABLE

DWN L A MAYER 14JUL87
CHK J SCHIEFER 14JUL87
APVD J SCHIEFER 14JUL87

PRODUCT SPEC: 108-25016
APPLICATION SPEC: -
WEIGHT: -

Tyco Electronics — Tyco Electronics Corporation, Harrisburg, Pa 17105-3608

NAME: HEADER ASSEMBLY,MOD 1, RIGHT ANGLE, SINGLE ROW, .156 CL

SIZE A1 | CAGE CODE 00779 | DRAWING NO C-87655 | RESTRICTED TO -

CUSTOMER DRAWING | SCALE 4:1 | SHEET 1 OF 1 | REV M3