THIS DRAWING IS UNPUBLISHED. RELEASED FOR PUBLICATION 20
© COPYRIGHT 20 BY TYCO ELECTRONICS CORPORATION. ALL RIGHTS RESERVED.

LOC	DIST
CE	16

REVISIONS

P	LTR	DESCRIPTION	DATE	DWN	APVD
	A	REL PER 0A00-0405-01	06DEC2001	LGE	-
	B	REV PER ECN 0A00-270-02	06MAY02	DEH	LAB
	C	REL PER EC 0A00-0220-03	12MAY03	LGE	FA
	D	REL PER EC 0A00-0174-05	26APR05	LGE	FA

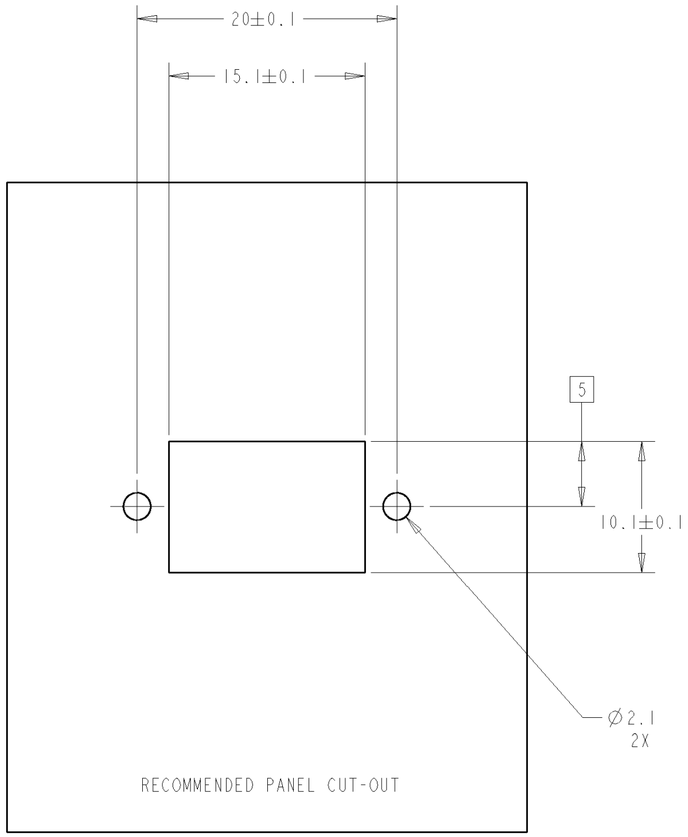

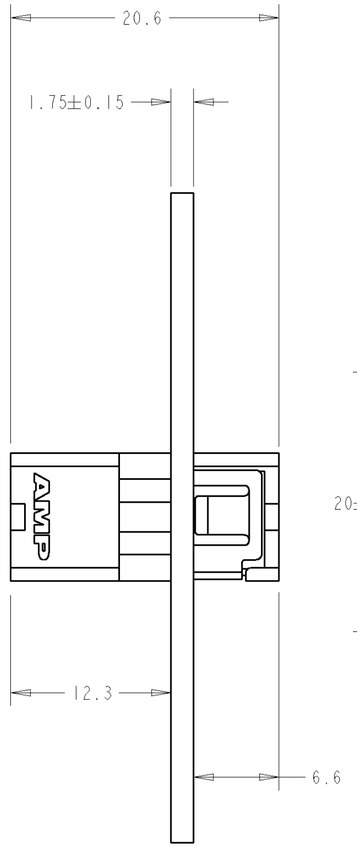

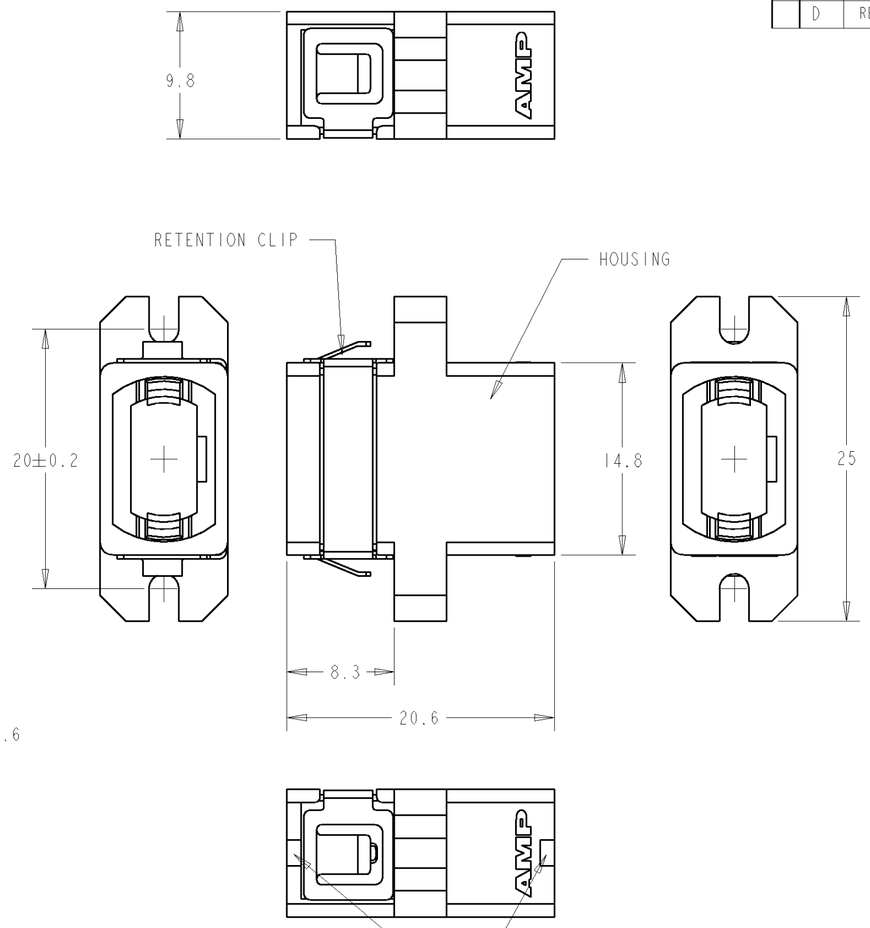

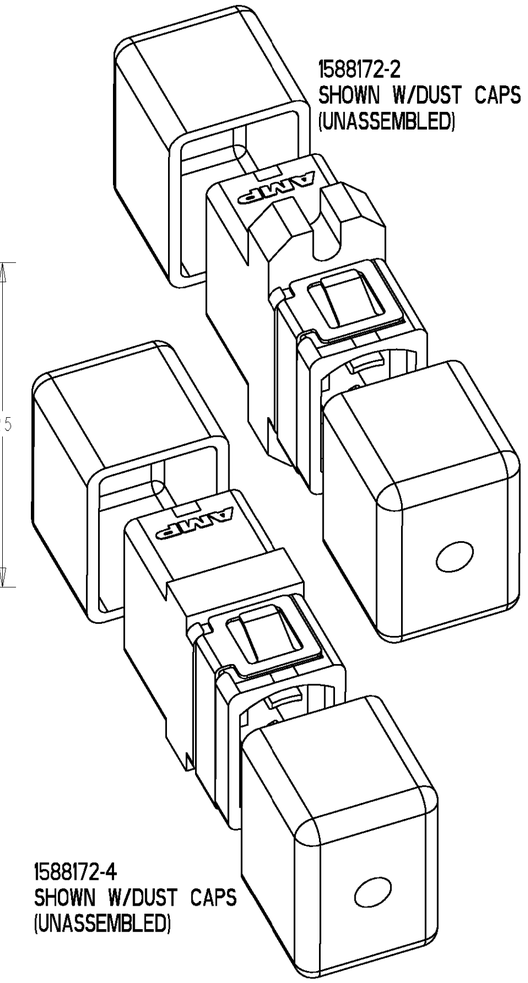

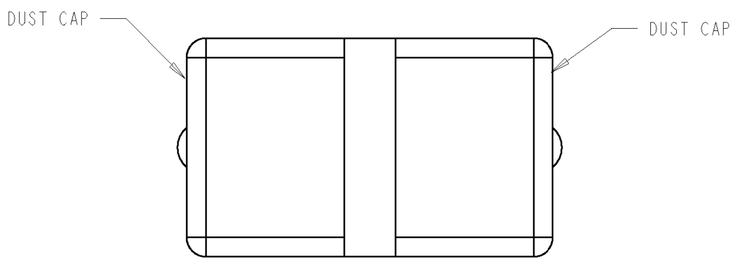

1588172-3
(WITHOUT FLANGE)
SHOWN W/DUST CAPS
ASSEMBLED

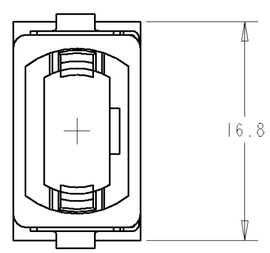

1588172-3
(WITHOUT FLANGE)

1588172-4
(WITHOUT FLANGE)
(WITH CLIP)

	DESCRIPTION	PART NO.
	MPO ADAPTER W/FLANGE	1588172-10
	MPO ADAPTER W/FLANGE, AND CLIP	1588172-9
5	MPO ADAPTER W/O FLANGE W/ CLIP	1588172-8
5	MPO ADAPTER W/O FLANGE	1588172-7
5	MPO ADAPTER W/ FLANGE AND CLIP	1588172-6
5	MPO ADAPTER W/ FLANGE	1588172-5
	MPO ADAPTER W/O FLANGE AND W/CLIP	1588172-4
	MPO ADAPTER W/O FLANGE	1588172-3
	MPO ADAPTER W/FLANGE, AND CLIP	1588172-2
	MPO ADAPTER W/FLANGE	1588172-1

NOTES:
1. MOUNTS IN 1.75mm BULKHEAD.
2. (OPTIONAL) USE #2 SCREWS AND NUTS (NOT PROVIDED).
3. MEETS THE ADAPTER INTERFACE DIMENSIONS AS SPECIFIED IN IEC 61754-7.
4. COLOR: BLACK

5 BULK PACK 50 PCS.

THIS DRAWING IS A CONTROLLED DOCUMENT FOR TYCO ELECTRONICS CORPORATION. IT IS SUBJECT TO CHANGE AND THE CONTROLLING ENGINEERING ORGANIZATION SHOULD BE CONTACTED FOR THE LATEST REVISION.

DIMENSIONS: mm

TOLERANCES UNLESS OTHERWISE SPECIFIED:
0 PLC ±-
1 PLC ±.1
2 PLC ±.05
3 PLC ±-
4 PLC ±-
ANGLES ±-

MATERIAL -
FINISH -

DWN LG EBY 06DEC2001
CHK D.ROHDE 06DEC2001
APVD F.ABENDSCHEIN 06DEC2001
PRODUCT SPEC -
APPLICATION SPEC -
WEIGHT -

tyco Electronics
Tyco Electronics
Harrisburg, PA 17105-3608

NAME MPO ADAPTER ASSY, RETENTION CLIP AND PANEL ASSY.

SIZE	CAGE CODE	DRAWING NO	RESTRICTED TO
A2	00779	C-1588172	-

CUSTOMER DRAWING

SCALE NTS SHEET 1 OF 1 REV D

AMP 1471-9 REV 31MAR2000

Pro/ENGINEER DRAWING