THIS DRAWING IS UNPUBLISHED. RELEASED FOR PUBLICATION -,- .
© COPYRIGHT - By - ALL RIGHTS RESERVED.

| LOC | DIST |
|---|---|
| GP | 00 |

REVISIONS

| P | LTR | DESCRIPTION | DATE | DWN | APVD |
|---|---|---|---|---|---|
| | B | REVISED PER ECO-12-015754 | 31AUG2012 | CJV | CWR |

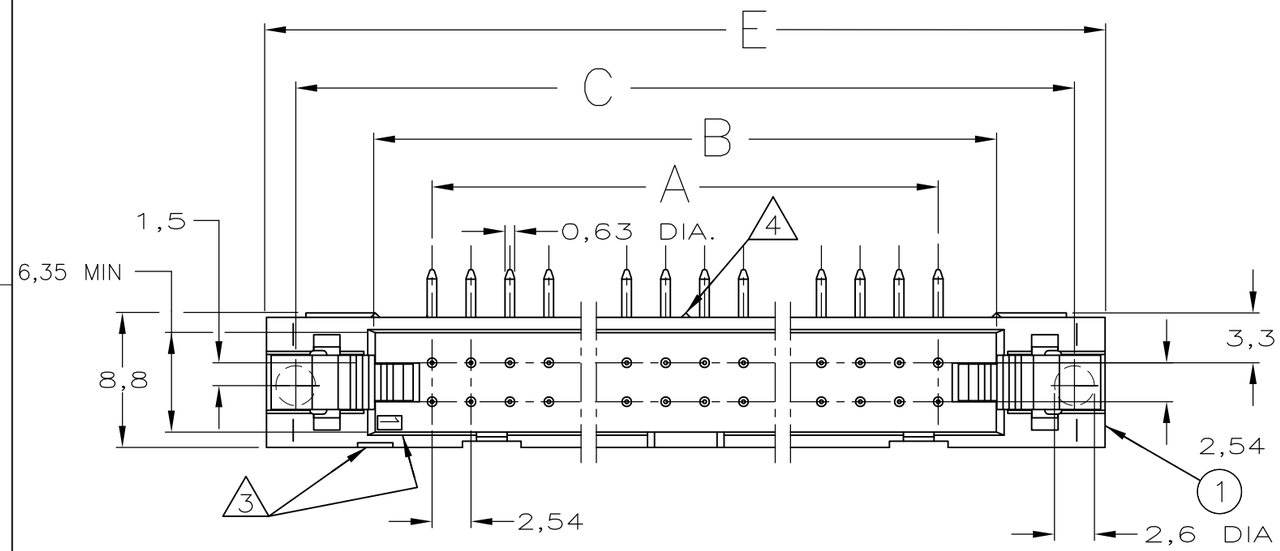


NOTES

1. SNAP-IN POLARIZERS PN. 927636-2 OR 927637-2 CAN BE APPLIED.
2. THERE IS NO WINDOW FOR SNAP-IN POLARIZERS AT THIS END IN 10 AND 14 POS HEADERS.
3. INDICATION OF FIRST POSITION.
4. THERE IS NO CENTER STAND-OFF IN 10-26 POS HEADERS.

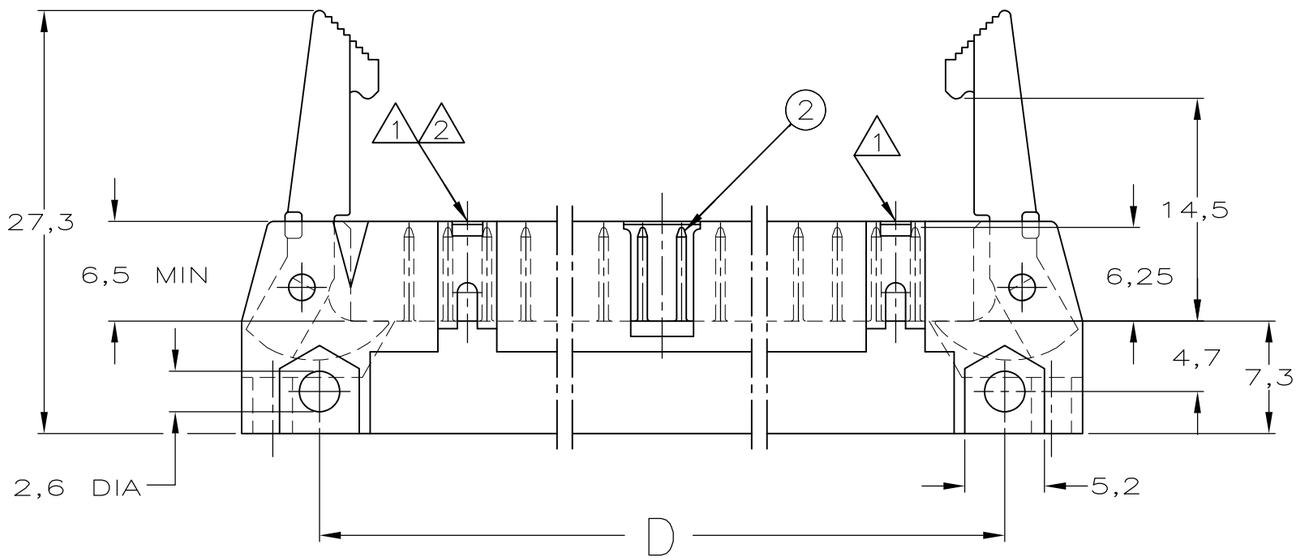


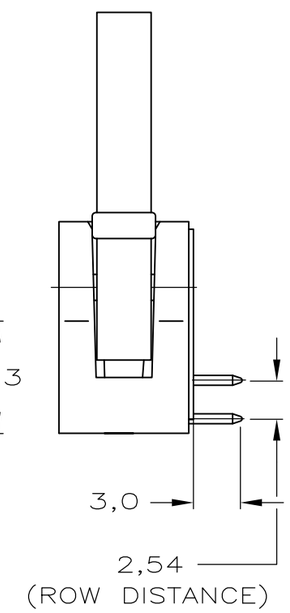


RECOMMENDED PCB-HOLE PATTERN

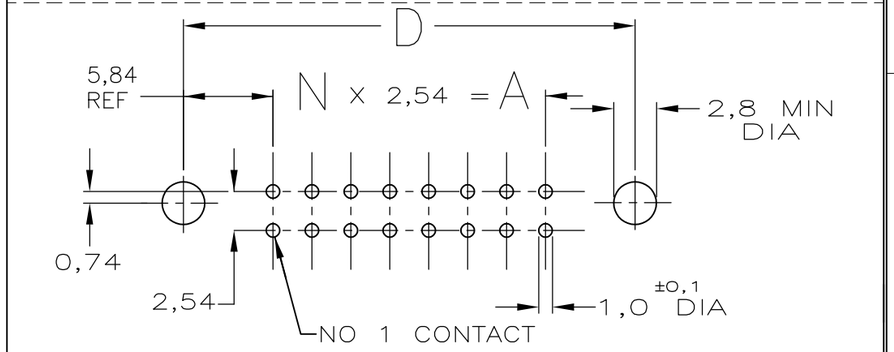


| COMPONENT NAME | MATERIAL | PLATING/COLOUR |
|---|---|---|
| 2 PIN-CONTACT | BRASS | MATING SIDE: 0,8µm AU OR 0,8µm DURAGOLD ®/ OVER 1,27µm NI<br>SOLDER SIDE: MIN. 3,0µm SN OVER 1,27µm NI |
| 1 HOUSING | GLASS FILLED POLYESTER | BLACK |

| E | D | C | B | A | NO OF POSITIONS | PART NUMBER |
|---|---|---|---|---|---|---|
| 100,6 | 90,4 | 96,5 | 86,4 | 78,7 | 64 | 6-828586-4 |
| 95,5 | 85,3 | 91,4 | 81,3 | 73,7 | 60 | 6-828586-0 |
| 82,8 | 72,6 | 78,7 | 68,6 | 61,0 | 50 | 5-828586-0 |
| 70,1 | 59,9 | 66,0 | 55,9 | 48,3 | 40 | 4-828586-0 |
| 62,5 | 52,3 | 58,4 | 48,3 | 40,6 | 34 | 3-828586-4 |
| 52,3 | 42,2 | 48,3 | 38,1 | 30,5 | 26 | 2-828586-6 |
| 44,7 | 34,5 | 40,6 | 30,5 | 22,9 | 20 | 2-828586-0 |
| 39,6 | 29,5 | 35,6 | 25,4 | 17,8 | 16 | 1-828586-6 |
| 37,1 | 26,9 | 33,0 | 22,9 | 15,2 | 14 | 1-828586-4 |
| 32,0 | 21,8 | 27,9 | 17,8 | 10,2 | 10 | 1-828586-0 |

THIS DRAWING IS A CONTROLLED DOCUMENT.
DIMENSIONING AND TOLERANCING PER ASME Y14.5M-2009

DIMENSIONS: mm

TOLERANCES UNLESS OTHERWISE SPECIFIED:
0 PLC ± -
1 PLC ± -
2 PLC ± -
3 PLC ± -
4 PLC ± -
ANGLES ± -

MATERIAL -
FINISH -

DWN J.v.LIEMPT 29-11-93
CHK R.VERSTIJNEN -
APVD L.v.SOEST -
PRODUCT SPEC -
APPLICATION SPEC -
WEIGHT -

TE Connectivity

NAME AMP-LATCH HEADER 90DEG VERSION WITH LATCHES

| SIZE | CAGE CODE | DRAWING NO | RESTRICTED TO |
|---|---|---|---|
| A3 | 00779 | C-828586 | - |

CUSTOMER DRAWING | SCALE - | SHEET 1 OF 1 | REV B

OBSOLETE
NOT the LATEST REVISION