THIS DRAWING IS UNPUBLISHED. RELEASED FOR PUBLICATION –,– .
© COPYRIGHT – By – ALL RIGHTS RESERVED.

| LOC | DIST |
|---|---|
| CM | 00 |

REVISIONS

| P | LTR | DESCRIPTION | DATE | DWN | APVD |
|---|---|---|---|---|---|
| | G1 | REVISED PER ECO–11–004587 | 11MAR11 | RK | HMR |

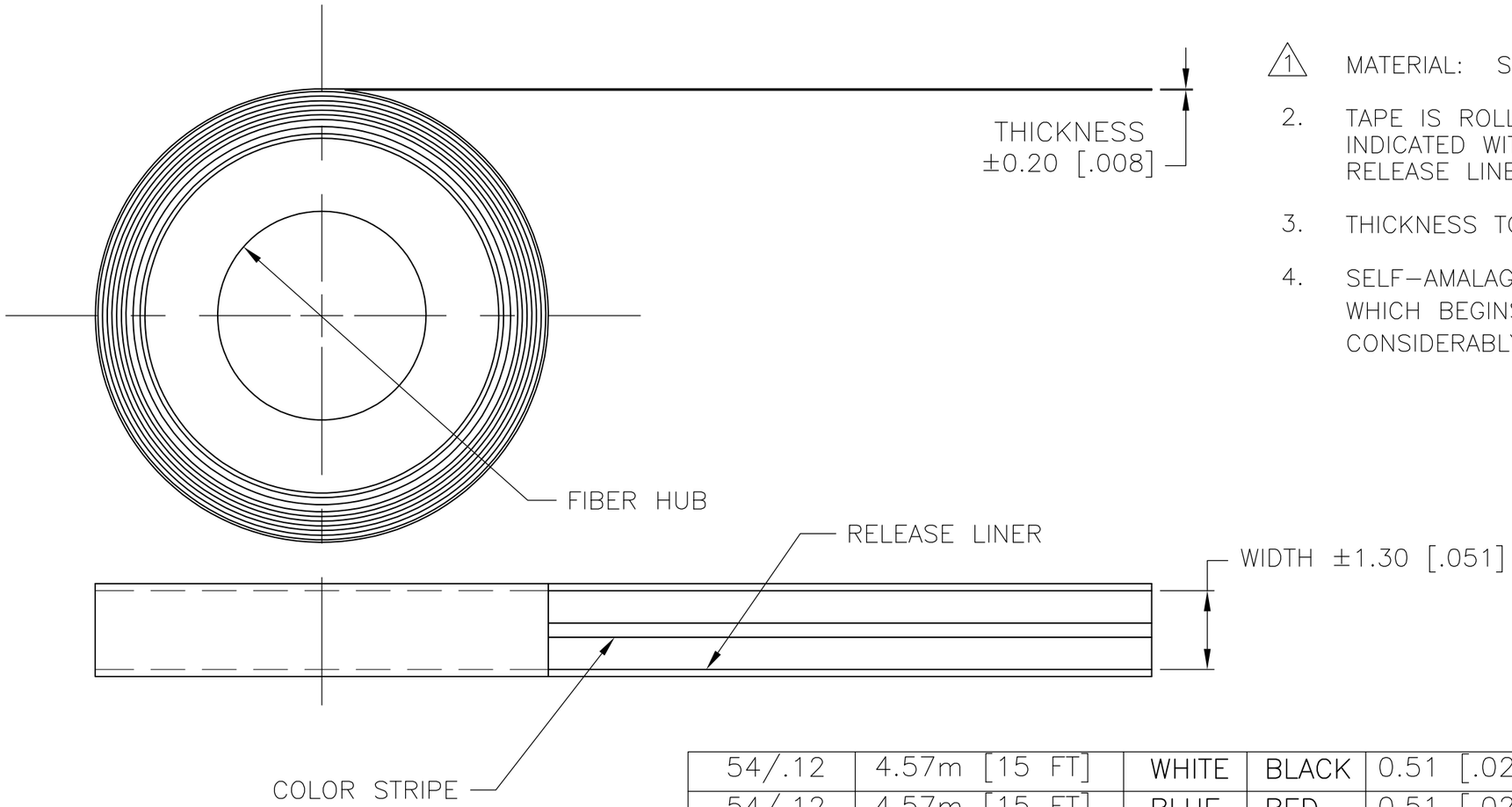


1. MATERIAL: SILICONE RUBBER.
2. TAPE IS ROLLED ONTO A FIBER HUB TO LENGTHS INDICATED WITH COLOR STRIPES DOWN AND RELEASE LINER ON OUTSIDE.
3. THICKNESS TO BE MEASURED AT CENTER OF TAPE.
4. SELF–AMALAGAMATING MATERIAL HAS A 1–YEAR SHELF–LIFE, WHICH BEGINS THE DAY ITS MADE. USE AFTER EXPIRATION CONSIDERABLY IMPEDES ITS ABILITY TO FUSE.

| WEIGHT GRAMS/POUNDS | LENGTH MINIMUM | STRIPE COLOR | TAPE COLOR | THICKNESS | WIDTH | DESCRIPTIVE PART NO. | PART NUMBER |
|---|---|---|---|---|---|---|---|
| 54/.12 | 4.57m [15 FT] | WHITE | BLACK | 0.51 [.020] | 25.4 [1.00] | ST1B215 | 1–608036–4 |
| 54/.12 | 4.57m [15 FT] | BLUE | RED | 0.51 [.020] | 25.4 [1.00] | ST1R215 | 1–608036–3 |
| 127/.28 | 10.97m[36 FT] | BLUE | CLEAR | 0.51 [.020] | 25.4 [1.00] | ST1C236 | 1–608036–2 |
| 576/1.27 | 10.97m[36 FT] | WHITE | RED | 2.03 [.080] | 38.1 [1.50] | ST12R836 | 608036–9 |
| 263/.58 | 10.97m[36 FT] | GREEN | RED | 1.02 [.040] | 31.8 [1.25] | ST14R436 | 608036–6 |
| 172/.38 | 10.97m[36 FT] | WHITE | GRAY | 0.76 [.030] | 25.4 [1.00] | ST1G336 | 608036–4 |
| 127/.28 | 10.97m[36 FT] | BLUE | GRAY | 0.51 [.020] | 25.4 [1.00] | ST1G236 | 608036–2 |
| 127/.28 | 10.97m[36 FT] | BLUE | RED | 0.51 [.020] | 25.4 [1.00] | ST1R236 | 608036–1 |

THIS DRAWING IS A CONTROLLED DOCUMENT.

DIMENSIONS: mm

TOLERANCES UNLESS OTHERWISE SPECIFIED:
0 PLC ±
1 PLC ±
2 PLC ±
3 PLC ±
4 PLC ±
ANGLES ±

MATERIAL 1

FINISH

DWN S. HOOVER 20–AUG–2002
CHK D. COLEY 20–AUG–2002
APVD D. COLEY 20–AUG–2002
PRODUCT SPEC
APPLICATION SPEC
WEIGHT

TE Connectivity

NAME: TAPE, SILICONE FUSION

| SIZE | CAGE CODE | DRAWING NO | RESTRICTED TO |
|---|---|---|---|
| A3 | 00779 | C–608036 | — |

CUSTOMER DRAWING | SCALE — | SHEET 1 OF 1 | REV G1