LTR	EN	DESCRIPTION	APPR	BY	DATE
A	–	INITIAL RELEASE	MT	DC	02–23–10

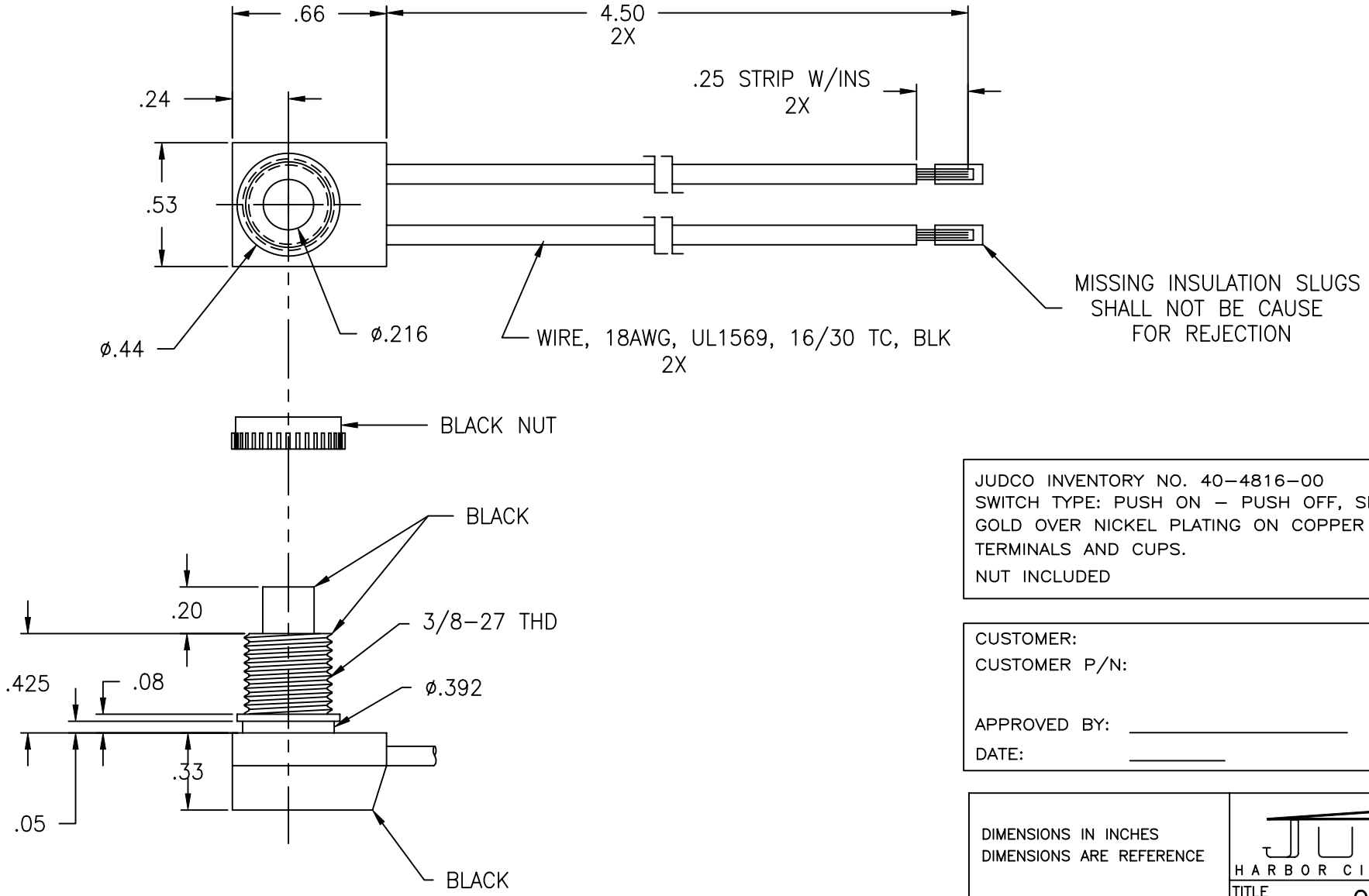

JUDCO INVENTORY NO. 40–4816–00
SWITCH TYPE: PUSH ON – PUSH OFF, SPST
GOLD OVER NICKEL PLATING ON COPPER TERMINALS AND CUPS.
NUT INCLUDED

CUSTOMER:
CUSTOMER P/N:

APPROVED BY: _____
DATE: _____

DIMENSIONS IN INCHES
DIMENSIONS ARE REFERENCE

DRAWN:	DC	02–23–10
APPR:	KJ	02–23–10
ENG'G:	IS	02–23–10

1415U1547A.DWG

JUDCO ®
HARBOR CITY CALIFORNIA

TITLE OUTLINE
J–188A–1 NON UL

DWG. NO. 1415–1547

SHEET 1 OF 1

This document embodies a product, component, and/or design proprietary to JUDCO MANUFACTURING INC., and which is protected either as a trade secret, by U.S. Patent, or by copyright. It may not be used in any way without written express consent of JUDCO MANUFACTURING INC.