THIS DRAWING IS UNPUBLISHED.
DIFFUSION RESTREINTE

RELEASED FOR PUBLICATION 20
LIBRE A LA DIFFUSION

© COPYRIGHT 20 BY -
ALL RIGHTS RESERVED.
TOUS DROITS RESERVES

REVISIONS

P	LTR	DESCRIPTION MODIFICATIONS	DATE	DWN DESS.	APVD APP.
	F2	PLATING NOTES CORRECTED	02AUG2016	KJK	PS

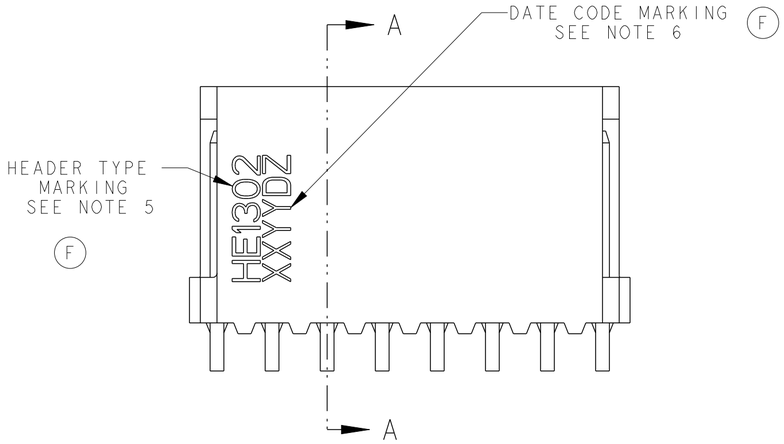

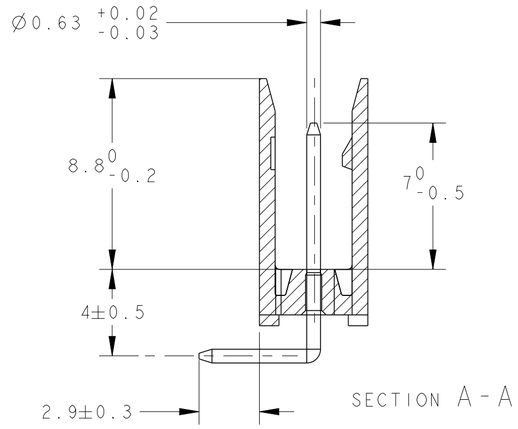

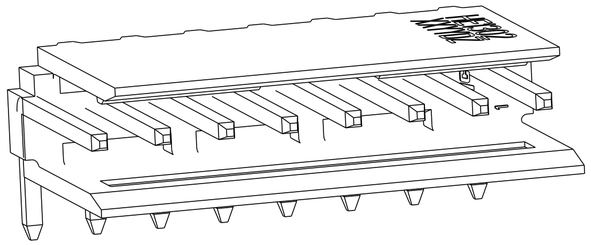

SCALE 6:1

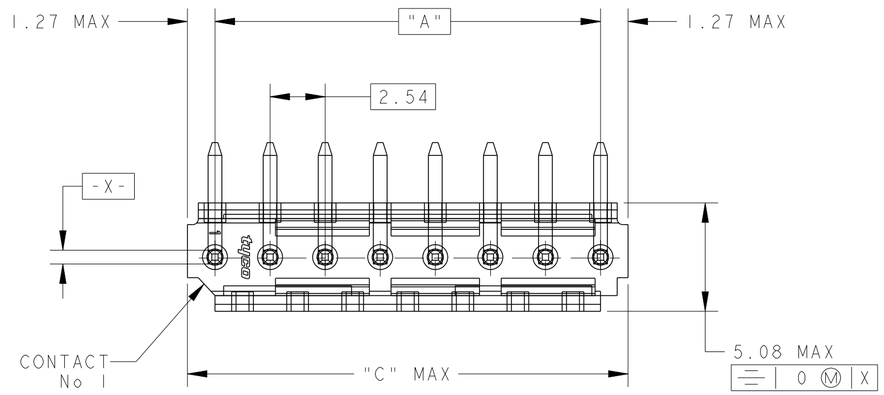

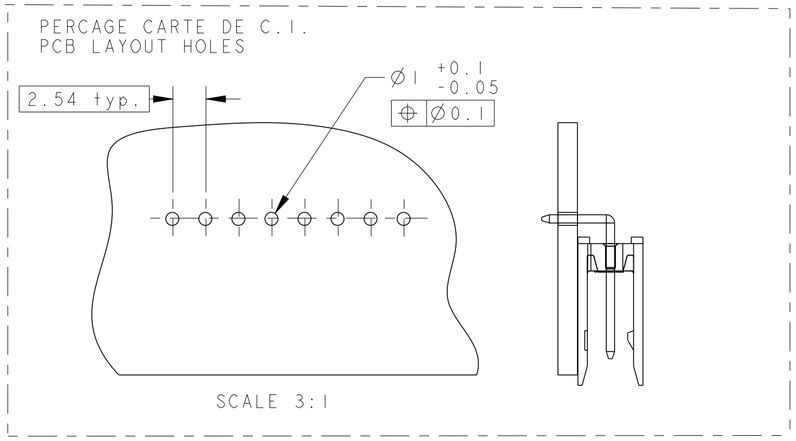

	45.72	43.18	18	1-281699-8 *
7 OBSOLETE	43.18	40.64	17	~~1-281699-7~~
	38.10	35.56	15	1-281699-5 *
	30.48	27.94	12	1-281699-2 *
	25.40	22.86	10	1-281699-0 *
	20.32	17.78	8	0-281699-8 *
7 OBSOLETE	17.78	15.24	7	~~0-281699-7~~
	15.24	12.70	6	0-281699-6 *
	12.70	10.16	5	0-281699-5 *
	10.16	7.62	4	0-281699-4 *
	7.62	5.08	3	0-281699-3 *
	5.08	2.54	2	0-281699-2
	C	A	Nb DE POS	PART NUMBER
	DIMENSIONS			

NOTES:

1. THESE HEADERS ARE DESIGNED TO BE MATED WITH "HE1302" RECEPTACLES SINGLE ROW
2. THE PART NUMBERS FOLLOWED BY * ARE COVERED BY THE INTERNATIONAL STANDARD IEC 603-8
3. CONTACTS PLATING: MATING AREA SELECTIVE GOLD MIN. 0.4µm OVER MIN. 1.27µm NICKEL
   SOLDER AREA MIN. 2.5µm TIN OVER MIN. 1.27µm NICKEL
4. PLASTIC MATERIAL: HIGH TEMPERATURE THERMOPLASTIC, UL-94V-0, BLUE COLOR
   CONTACT MATERIAL: PHOSPHOR BRONZE
5. TYPE MARKING (HE1302) WITH BLACK INK
6. DATE CODE MARKING WITH BLACK INK

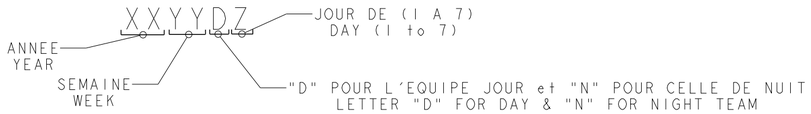

7 OBSOLETE PARTS: OBSOLETE CIS STREAMLINING PER D.RENAUD/D.SINISI

THIS DRAWING IS A CONTROLLED DOCUMENT.
CE PLAN EST UN DOCUMENT CONTROLE PAR AMP INCORPORATED.
IL EST SUSCEPTIBLE D'ETRE REVISE. CONTACTER LE SERVICE TECHNIQUE D'AMP DE FRANCE POUR OBTENIR LA DERNIERE REVISION.

DIMENSIONS: mm

TOLERANCES UNLESS OTHERWISE SPECIFIED:
TOLERANCES NON SPECIFIEES (SUIV NB DE DECIMALES)
0 PLC/DEC: ±
1 PLC/DEC: ±0.3
2 PLC/DEC: ±
3 PLC/DEC: ±
4 PLC/DEC: ±
ANGLES ±5°

MATERIAL/MATIERE: SEE/VOIR NOTE 4
FINISH/FINITION: SEE/VOIR NOTE 3

DWN/DESSINE 22NOV2000 C. COMBEDOUZON
CHK/VERIFIE 22NOV2000 T. CORRIOU
APVD/APROUVE 22NOV2000 Y. PETRONIN
PRODUCT SPEC SPEC. PRODUIT 108-15053
APPLICATION SPEC SPEC. APPLICATION -
WEIGHT MASSE APPROX. -

TE Connectivity

NAME TITRE: HEADERS HE13, SINGLE ROW, RIGHT ANGLE
-

SIZE FORMAT A2 | CAGE CODE 00779 | DRAWING NO No PLAN C-281699 | RESTRICTED TO RESERVE A -

CUSTOMER DRAWING /PLAN CLIENT UNIQUEMENT POUR REFERENCE | SCALE ECHELLE 5:1 | SHEET FEUILLE 1 OF DE 1 | REV F2

1471-9 (3/13)