| REV. | RELEASE NO. | DATE | DRAWN | APP. |
|---|---|---|---|---|
| 1 | 00-2147 | 09/11/00 | GJR | |
| 2 | 00-2183 | 09/29/00 | GJR | |
| 3 | 01-2417 | 05/21/01 | GJR | |
| 4 | 01-2539 | 07/19/01 | GJR | |
| 5 | 04-4057 | 5/18/04 | GJR | |
| 6 | 04-4103 | 6/22/04 | GJR | |
| 7 | 04-4436 | 12/28/04 | GJR | |
| 8 | 05-4483 | 2/9/05 | GJR | |
| 9 | 05-4621 | 5/3/05 | GJR | |
| 10 | 06-5083 | 3/20/06 | GJR | |
| 11 | 07-5466 | 11/30/07 | KMS | |

| CABLE/CONNECTOR S/A PART NUMBER | (1) 3 CONDUCTOR CABLE BULK | FINAL LENGTH ±3.0% "A" | CABLE LENGTH ±1.5% "B" BEFORE ASSEMBLY |
|---|---|---|---|
| P-2431.3 | 14224.1 | 6.0 IN<br>152.4 mm | 6.75 IN<br>171.5 mm |
| P-2432.3 | 14224.1 | 12.0 IN<br>304.8 mm | 12.75 IN<br>323.8 mm |
| 4 P-2433.3 | 14224.1 | 18.0 IN<br>457.2 mm | 18.75 IN<br>476.2 mm |
| P-2434.3 | 14224.1 | 24.0 IN<br>609.6 mm | 24.75 IN<br>628.6 mm |
| P-2435.3 | 14224.1 | 36.0 IN<br>914.4 mm | 36.75 IN<br>933.5 mm |
| 5 14300.3 | 14224.1 | 8.0 IN<br>203.2 mm | 8.75 IN<br>222.2 mm |
| 6 14306.3 | 14224.1 | 72.0 IN<br>1828.8 mm | 72.75 IN<br>1847.8 mm |
| 7 14376.3 | 14224.1 | 80.0 IN<br>2032.0 mm | 80.75 IN<br>2051.0 mm |
| 8 14378.3 | 14224.1 | 9.0 IN<br>228.6 mm | 9.75 IN<br>247.7 mm |
| 9 14399.3 | 14224.1 | 48.0 IN<br>1219.2 mm | 48.75 IN<br>1238.2 mm |
| 10 14482.3 | 14224.1 | 120.0 IN<br>3048.0 mm | 120.75 IN<br>3067.0 mm |
| 11 14551.3 | 14224.1 | 180.0 IN<br>4572.0 mm | 180.75 IN<br>4591.0 mm |

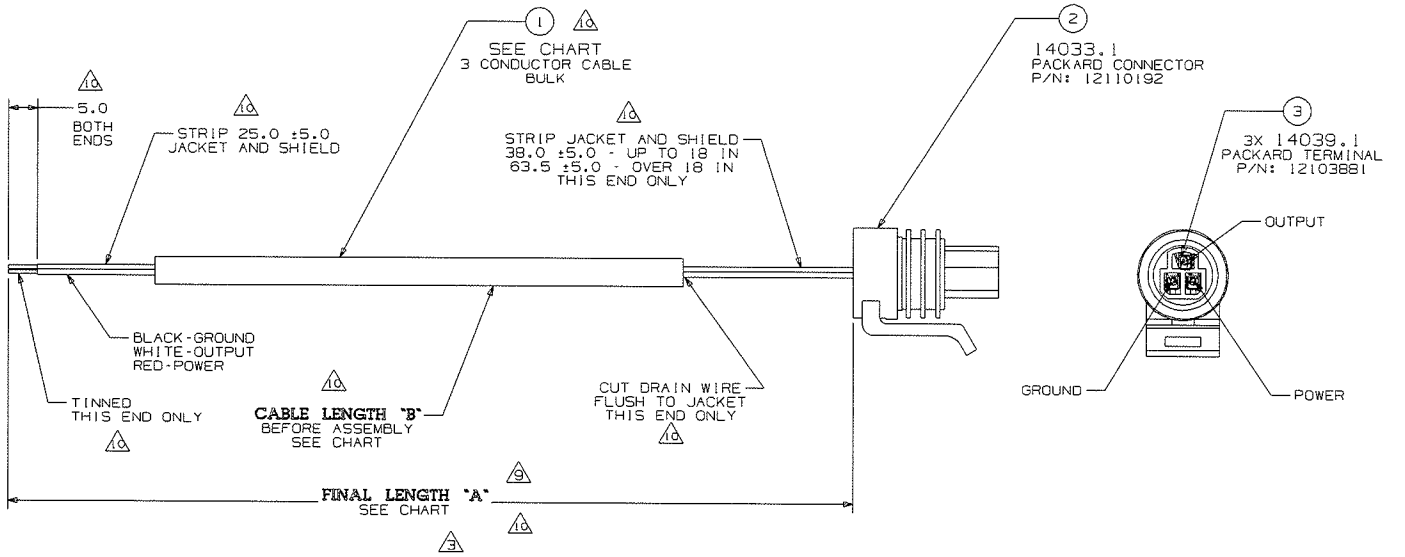


| MILLIMETERS | | |
|---|---|---|
| TOLERANCE | .0 | .00 |
| DIA. ± | .2 | .13 |
| LINEAR ± | .2 | .13 |
| ANGULAR ± | 1° | |
| DO NOT SCALE PRINT | | |

THIS DRAWING REPRESENTS CONFIDENTIAL AND PROPRIETARY INFORMATION OF SSI TECHNOLOGIES INC AND SHALL NOT BE USED, ALTERED OR DISCLOSED IN WHOLE OR IN PART WITHOUT THE EXPRESS WRITTEN APPROVAL OF SSI TECHNOLOGIES INC. ANY USE OF THIS DRAWING SHALL BE SUBJECT TO SSI TECHNOLOGIES INC SUPPLIER QUALITY ASSURANCE SPECIFICATION SQA9001.

SSI Technologies, Inc.

| | | | |
|---|---|---|---|
| JOB: PRESSURE SENSOR | | DO NOT SCALE | ASSEMBLY NO. - - - - - |
| NAME: CABLE/CONNECTOR S/A | | 3RD ANGLE PROJECTION | CUSTOMER I.D. |
| MATERIAL: N/A | | REFER TO ANSI Y14.5M-1994 | DRWG. NO. P-2418.3 |
| DWG SIZE: C | SHEET: 1 OF 1 | SCALE: N/A | VERSION: NX |
| COMPUTER DRAWN NO MANUAL CHANGE | | | REV. 11 |

A B C D E F G H J K L M
N P Q R S T U V W X Y Z