MATERIAL NUMBER	# OF COLUMNS	# OF DIFF PAIR	DIM "A" MAX	DIM "B"	PTHØ
76850-5006	6	24	20.25	10.00	0.46±0.05
76850-5036	6	24	20.25	10.00	0.39±0.05
76850-5008	8	32	24.30	14.05	0.46±0.05
76850-5038	8	32	24.30	14.05	0.39±0.05
76850-5010	10	40	28.35	18.10	0.46±0.05
76850-5020	10	40	28.35	18.10	0.39±0.05

76850-*0**

MODULE & TAIL PLATING TYPE
5 = RIGHT GUIDED, LEAD-FREE

# OF COLUMNS
06 = 6 COL 0.46 PTH
36 = 6 COL 0.39 PTH
08 = 8 COL 0.46 PTH
38 = 8 COL 0.39 PTH
10 = 10 COL 0.46 PTH
20 = 10 COL 0.39 PTH

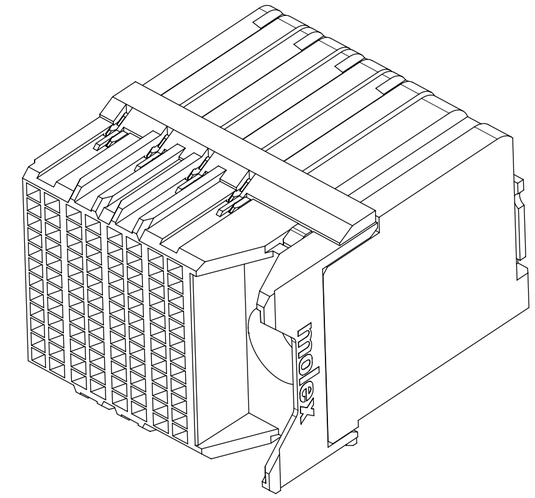

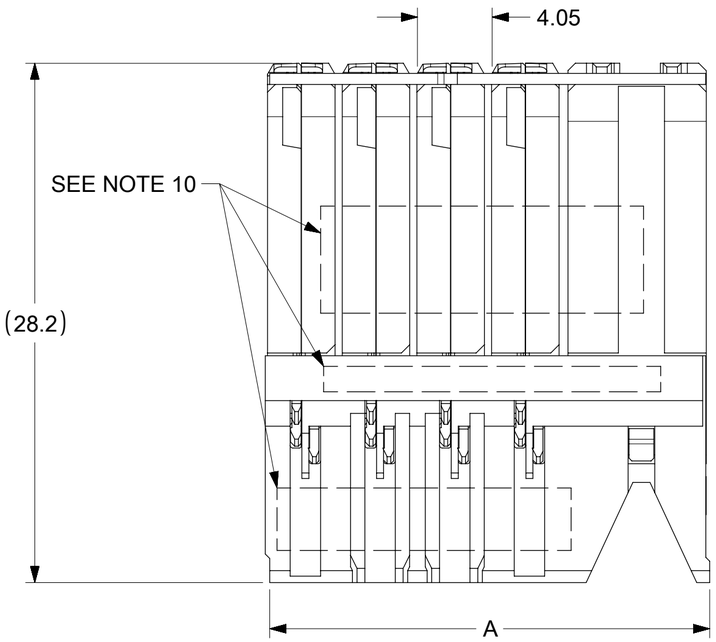

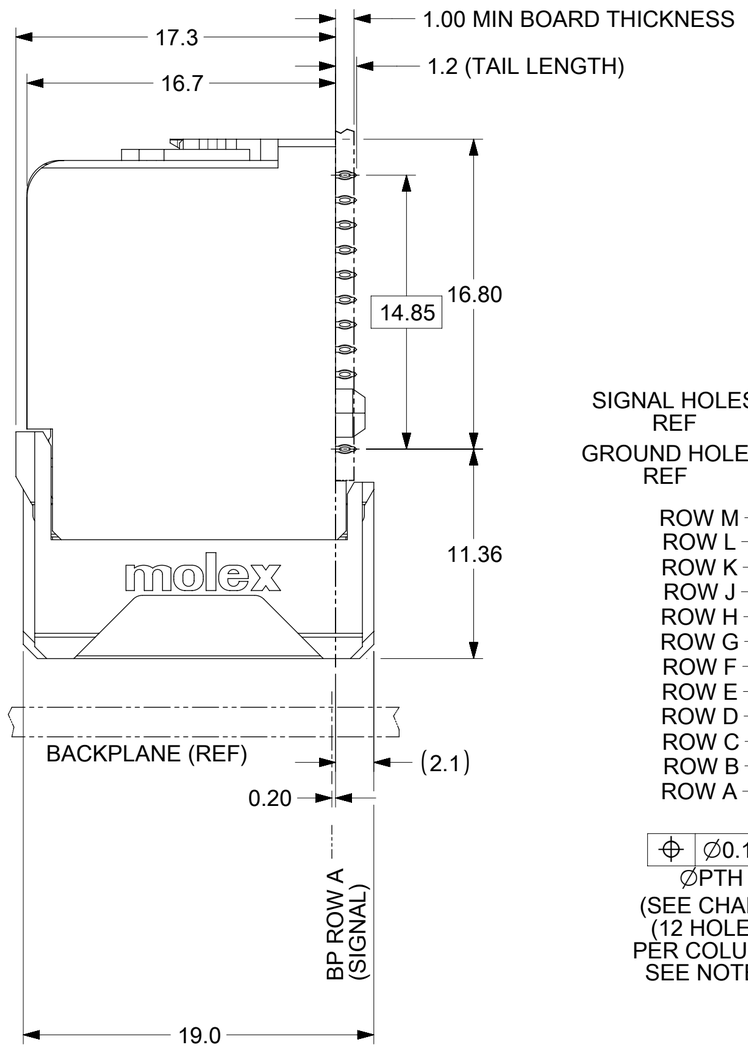

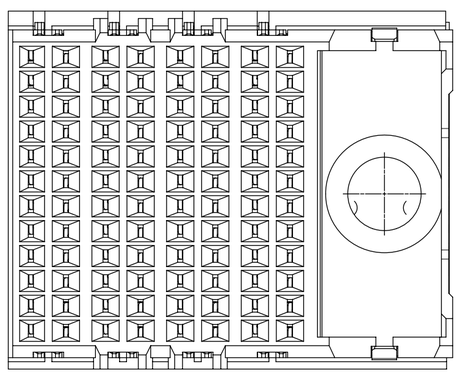

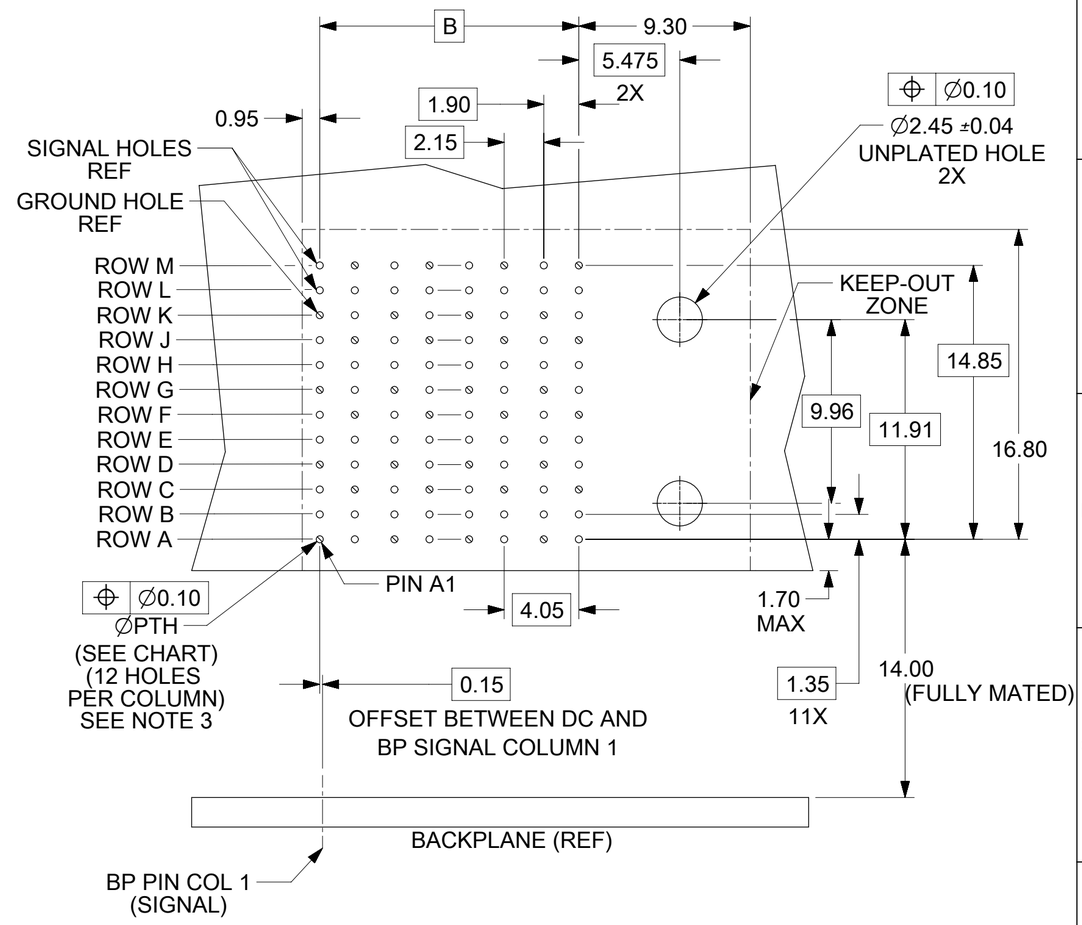

DAUGHTERCARD HOLE PATTERN
(CONNECTOR SIDE)

NOTES:
1. MATERIALS: HOUSING - LIQUID CRYSTAL POLYMER (LCP), GLASS-FILLED, UL94V-0
   TERMINALS - HIGH PERFORMANCE COPPER ALLOY
2. FINISH: 30uIN MIN GOLD IN CONTACT AREA. SELECTIVE TIN ON PCB TAILS. NICKEL OVERALL.
3. REFER TO MOLEX PRODUCT SPEC PS-76060-999 FOR PERFORMANCE SPECIFICATIONS AND ADDITIONAL PCB INFORMATION.
4. EACH SIGNAL WAFER CONTAINS 2 COLUMNS OF TERMINALS.
5. PRODUCT IS PACKAGED PER PK-70873-610.
6. THIS PART CONFORMS TO CLASS B REQUIREMENTS OF COSMETIC SPEC PS-45499-002.
7. REFER TO MOLEX SALES DRAWING SD-76845-003 FOR THE MATING HEADERS.
8. WHEN USING MOLEX SUPPLIED #2-32 SCREW 73726-0000 (9.50mm±0.38 THREADABLE SCREW LENGTH), THE MAXIMUM BOARD THICKNESS IS 4.4mm.
9. REFER TO MOLEX ROUTING GUIDE AS-76850-990 FOR ADDITIONAL PCB LAYOUT AND ROUTING RECOMMENDATIONS.
10. MARKING: LOCATED APPROXIMATELY AS SHOWN. PART NUMBER AND DATE CODE.

THIS DRAWING CONTAINS INFORMATION THAT IS PROPRIETARY TO MOLEX ELECTRONIC TECHNOLOGIES, LLC AND SHOULD NOT BE USED WITHOUT WRITTEN PERMISSION

DIMENSION UNITS	SCALE
mm	NTS

GENERAL TOLERANCES (UNLESS SPECIFIED)

ANGULAR TOL	±	0.5 °
4 PLACES	±	
3 PLACES	±	
2 PLACES	±	0.15
1 PLACE	±	0.25
0 PLACES	±	

DRAFT WHERE APPLICABLE MUST REMAIN WITHIN DIMENSIONS

CURRENT REV DESC: MIGRATED TO NX

EC NO: 612533
DRWN: MMALLIGEVALU 2018/11/09
CHK'D: TMARRI 2019/02/22
APPR: BOKOK 2019/03/01

INITIAL REVISION:
DRWN: JLAURX 2010/01/11
APPR: JBINGHAM 2010/01/14

THIRD ANGLE PROJECTION | DRAWING: C-SIZE | SERIES: 76850

molex

IMPACT DAUGHTERCARD
4 PAIR ORTHOGONAL GUIDE RIGHT SALES DWG

PRODUCT CUSTOMER DRAWING

DOCUMENT NUMBER	DOC TYPE	DOC PART	REVISION
SD-76850-004	PSD	001	B4

MATERIAL NUMBER	CUSTOMER	SHEET NUMBER
SEE CHART	GENERAL MARKET	1 OF 1

DOCUMENT STATUS	P1	RELEASE DATE	2019/03/01 07:25:58

FORMAT: master-tb-prod-C
REVISION: H
DATE: 2018/01/18