NOTES:

1. MATERIALS AND FINISHES:

BODY	ZINC DIECAST	NICKEL PLATED (.000200" MIN.)
OUTER CONTACT	BRASS	NICKEL PLATED (.000100" MIN.)
FEMALE CONTACT	BERYLLIUM COPPER	GOLD PLATED (.000030" MIN.) OVER NICKEL
SPRING RING	BERYLLIUM COPPER	NICKEL PLATED
FERRULE	COPPER ALLOY	NICKEL PLATED
CAP	BRASS	NICKEL PLATED
INSULATOR		PTFE

2. ELECTRICAL:

A. IMPEDANCE = 75 OHMS, NOMINAL
B. FREQUENCY RANGE = DC - 2.0 GHz
C. VSWR (RETURN LOSS) = 1.430 MAX. (15.0 dB)

3. PHYSICAL:

A. TEMPERATURE RANGE = -65°C TO +165°C (-85°F TO +329°F)
B. INTERFACE = MATES WITH MIL-STD-348, SMB SERIES, FIGURE 311.1
C. CRIMP TOOLS = FERRULE: .178 HEX

4. PACKAGING:

A. INDIVIDUALLY BAG EACH CONNECTOR
B. CAP AND FERRULE ARE PACKAGED LOOSE
C. BAG MARKING: AMPHENOL P/N: 903-613P-71AD
DATE CODE: (YYWW)

903-613P-71AD	REVISIONS				
DRAWING NO.	REV	DESCRIPTION	DATE	ECO	APPR
THIRD ANGLE PROJ.	A	RELEASE TO MFG	6/5/02	44067	CPM

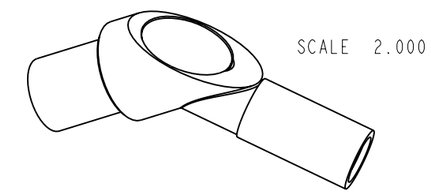

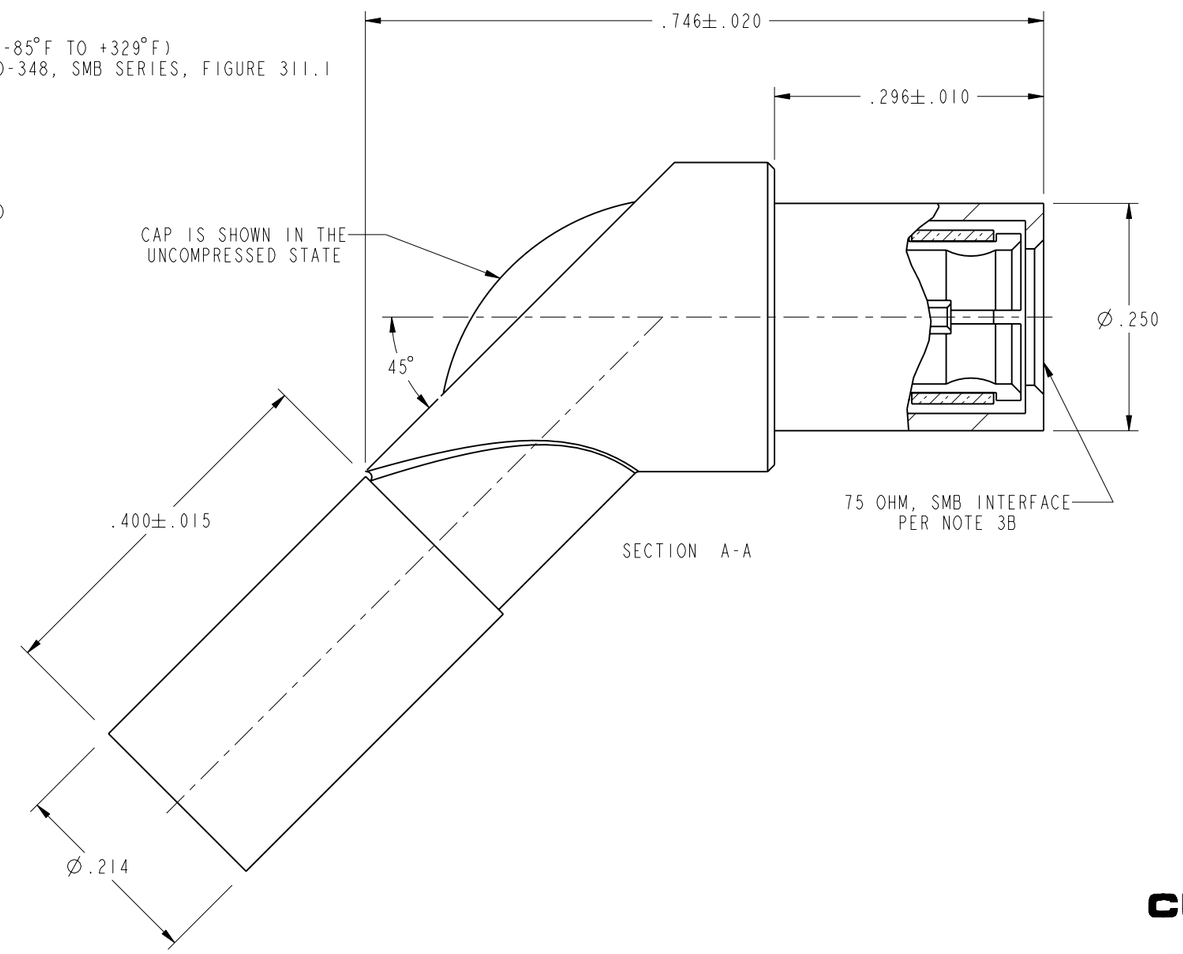

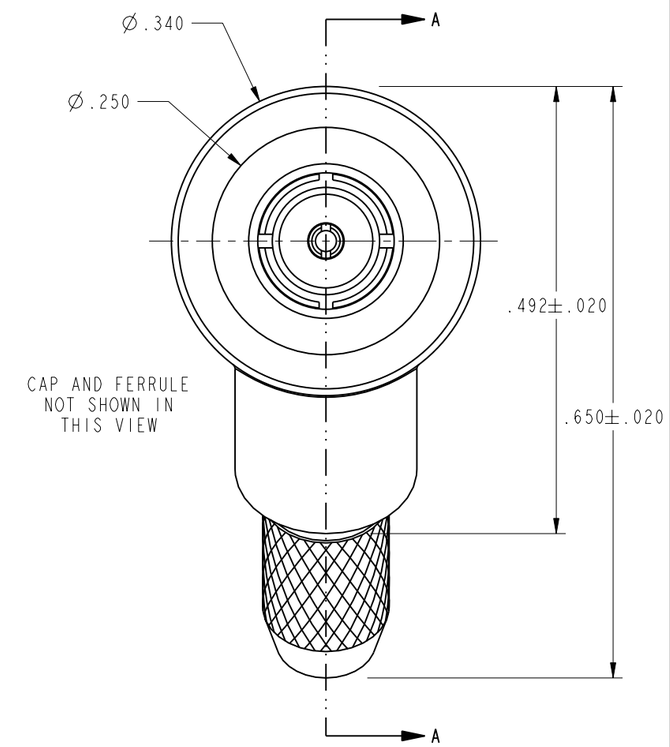

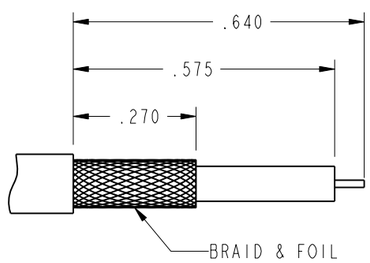

RECOMMENDED CABLE STRIPPING DIMENSIONS

SCALE 3.000

CUSTOMER OUTLINE DRAWING

ALL OTHER SHEETS ARE FOR INTERNAL USE ONLY

UNLESS OTHERWISE SPECIFIED, DIMENSIONS ARE IN INCHES AND TOLERANCES ARE:
2 PLACE DECIMAL ±.015 (0,381 mm) 3 PLACE DECIMAL ±.005 (0,127 mm) ANGLES ± 1°

NOTICE - These drawings, specifications, or other data (1) are, and remain the property of Amphenol Corp. (2) must be returned upon request; and (3) are confidential and not to be disclosed to any person other than those to whom they are given by Amphenol Corp. The furnishing of these drawings, specifications, or other data by Amphenol Corp., or to any other person to anyone for any purpose is not to be regarded by implication or otherwise in any manner licensing, granting rights or permitting such holder or any other person to manufacture, use or sell any product, process or design, patented or otherwise, that may in any way be related to or disclosed by said drawings, specifications, or other data.

MATERIAL

REFERENCE
EAR# 215
GEN# ASSYM17_SMB
615X-1673-800

DRAWN C. McGRATH	DATE 5/23/02	
ENGINEER B.C. GLEISSNER	DATE 5/23/02	
APPROVED O. BARTHELMES	DATE 5/29/02	
CAD FILE 1:\SMB\903-613P-71AD		

TITLE
SMB PLUG, 45 DEGREE, 75 OHM FOR 735A CABLE ZINC DIECAST BODY

Amphenol
Amphenol Corporation
Communication and Network Products Division
Danbury, CT U.S.A. 06810

SCALE: 6.0:1 SHEET 2 OF 2

CODE ID	DWG SIZE	DRAWING NO.	REV
74868	B	903-613P-71AD	A