THIS DRAWING IS UNPUBLISHED. RELEASED FOR PUBLICATION MARCH ,2006.
© COPYRIGHT 2006 BY TYCO ELECTRONICS CORPORATION. ALL RIGHTS RESERVED.

LOC	DIST
E	B

REVISIONS

P	LTR	DESCRIPTION	DATE	DWN	APVD
	B	ECR–07–012186	22/05/07	AM	FWK

NOTES:

1. ELECTRICAL DATA: CONTACT RESISTANCE: 10 mOhm MAX
   INSULATION RESISTANCE: 100 MOhm MIN at 500VDC
   CURRENT RATING: 5 AMPS
   BREAKDOWN VOLTAGE: 500 VAC MIN PER MINUTE
2. ENVIRONMENTAL: OPERATING TEMPERATURE: –25°C TO +90°C
   SEALING REQUIREMENTS: IP67
3. PROD SPEC: 108–3641
4. PACKAGING: 107–3334
5. FOR TECHNICAL DATA REFER TO YOUR LOCAL TYCO ELECTRONICS SALES OFFICE
6. ALL DIMENSIONS ARE NOMINAL FOR REFERENCE ONLY UNLESS OTHERWISE STATED

ITEM	DESCRIPTION	MATERIAL	FINISH/COLOUR	QTY
1	SCREW NUT	ZINC DIE CAST	2.5µm NICKEL PLATED	1
2	CONNECTOR BODY	GF NYLON	BLACK	1
3	PIN CONTACT	BRASS	0.15µm GOLD OVER NICKEL	8
4	8 CORE CABLE (CORES 0.25mm²/24AWG)	PU JACKET HAL FREE	BLACK	1
5	SHIELD	BRASS	–	1
6	SHIELDING FOIL	COPPER	–	1
7	ADHESIVE	–	–	1

PIN ASSIGNMENTS
FRONT VIEW

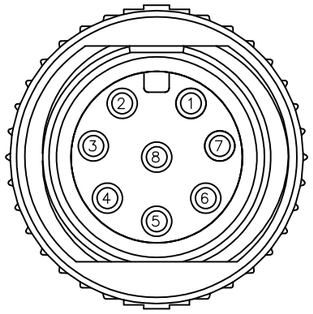

PIN	WIRE COLOUR
8	GREEN
7	YELLOW
6	ORANGE
5	RED
4	BLUE
3	WHITE
2	BROWN
1	BLACK

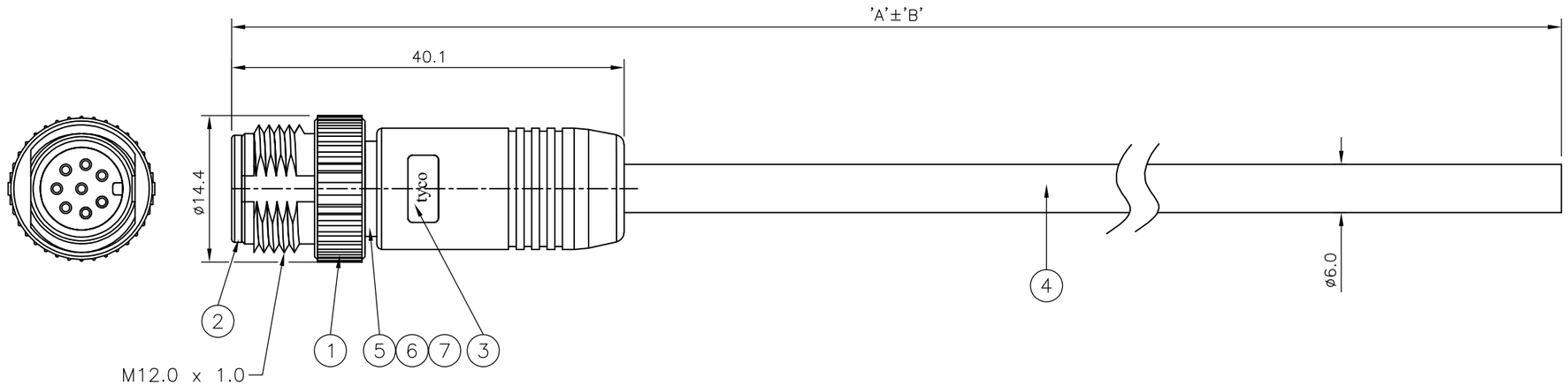

DIM A	TOL 'B'	DESCRIPTION	PART NUMBER
10000	500 mm	M12 STRAIGHT MALE CONNECTOR 10.0m CABLE	1838364–5
7000	350 mm	M12 STRAIGHT MALE CONNECTOR 7.0m CABLE	1838364–4
5000	250 mm	M12 STRAIGHT MALE CONNECTOR 5.0m CABLE	1838364–3
3000	150 mm	M12 STRAIGHT MALE CONNECTOR 3.0m CABLE	1838364–2
2000	100 mm	M12 STRAIGHT MALE CONNECTOR 2.0m CABLE	1838364–1

THIS DRAWING IS A CONTROLLED DOCUMENT.

DIMENSIONS: mm

TOLERANCES UNLESS OTHERWISE SPECIFIED:
0 PLC ± –
1 PLC ± –
2 PLC ± –
3 PLC ± –
4 PLC ± –
ANGLES ± –

MATERIAL –
FINISH –

DWN MANJUNATH.T.N 03APR06
CHK F.WHEELER–KING 07AUG06
APVD F.WHEELER–KING 07AUG06
PRODUCT SPEC –
APPLICATION SPEC –
WEIGHT –

tyco Electronics
Tyco Electronics Corporation
Bideford, UK, EX39 4HE

NAME
M12 SHIELDED, STRAIGHT MALE CONNECTOR
WITHOUT STRAIN RELIEF 8 POSITION, PU CABLE

SIZE	CAGE CODE	DRAWING NO	RESTRICTED TO
A3	00779	C–1838364	–

CUSTOMER DRAWING
SCALE NTS SHEET 1 OF 1 REV B