# SERIES 1010 - OPEN SNAP-ACTION SWITCHES

**TO 6 (2) A 250 V AC**

## PRODUCT FEATURES

- Powerful snap-action switch with C-spring contact system according to design DIN 41635C
- High switching reliability due to large contact forces directly after switching
- Small size, large travel and difference travel
- Short bounce time
- Contact system insensitive to vibrations

## ON REQUEST

- Extended overtravel
- Special base forms
- Special actuating cams
- In addition to a wide range of normally closed contacts, normally open contacts and changeover switches and spring sets without snap function (basic type 1017) are available

| | |
|---|---|
| Design | DIN 41635 C |
| Contact resistance (new condition) | < 100 mOhm (1 A 12 V DC) |
| Insulation resistance (new condition) | > 100 MOhm (500 V DC) |
| Proof tracking | 250 PTI |
| Protection type | IP 00 |
| Ambient temperature | -20 °C ... +85 °C ... 120 °C (basic type 1014) |
| Flammability | UL 94 V-2 or<br>UL 94 HB |
| Glow wire test temperature | 850 °C |
| Material actuator<br>housing<br>terminals | spring steel / PA glass fiber-reinforced / PA / metal (only 1017.0153)<br>PA glass fiber-reinforced / PA<br>silver plated |
| Bounce time | < 5 ms |
| Approval marks | |
| Suitable for appliances of protection class II under compliance with the installation conditions required on the equipment side | |

# SERIES 1010 - OPEN SNAP-ACTION SWITCHES

**TO 6 (2) A 250 V AC**

| | 6 (2) A 250 V AC 25E3 | 2 (0.5) A 250 V AC 20E4 | 2 (0.5) A 250 V AC 5E4 | 2 A 12 V DC 10E4 | 1 A 24 V DC 10E4 | 0.5 A 15 V 5E4 | 0.1 A 24 V DC 5E4 | 30 mA 12 V 5E4 | Terminal type | Terminal description | Contact material | Operating force (N) | Operating position (OP) (mm) | Difference travel max. (mm) | Free position (FP) max. (mm) | Permissible total travel position (TP) (mm) | Actuator description | Mechanical life endurance | Miscellaneous | Stock version |
|---|---|---|---|---|---|---|---|---|---|---|---|---|---|---|---|---|---|---|---|---|
| **Normally closed contact (SPNC)** | | | | | | | | | | | | | | | | | | | | |
| 1010.7601 | | | o | | | | | | | 9.5 long | Ag | 0.25 - 0.6 | 2.2 ±0.6 | 0.9 | 0.4 | 3.5 | | 1E6 | | |
| **Normally open contact (SPNO)** | | | | | | | | | | | | | | | | | | | | |
| 1010.7401 | | | o | | | | | | | 9.5 long | Ag | 0.25 - 0.6 | 2.2 ±0.6 | 0.9 | 0.4 | 3.5 | | 1E6 | | |
| 1010.7402 | | | o | | | | | | | 9.5 long | Ag | 0.45 - 1.05 | 2.2 ±0.6 | 0.9 | 0.4 | 3.5 | | 1E6 | | |
| 1017.0801 | | | | | | | o | | | 9.2 long | CuBe silver plated | 0.15 - 0.5 | 2.2 ±0.6 | | 0 | 3.2 | | 1E6 | without approval mark | o |
| 1017.5701 | | | | | | | o | | | | CuSn silver plated | 0.15 - 0.5 | 1.4 ±0.6 | | 3.6 | 0.4 | | 1E6 | without approval mark | |
| 1017.0851 | | | | | | | | o | | 9.2 long | Au | 0.15 - 0.5 | 2.2 ±0.6 | | 0 | 3.2 | | 1E6 | without approval mark | |
| **Changeover switch (SPDT momentary)** | | | | | | | | | | | | | | | | | | | | |
| 1010.9705 | o | | o | | | | | | | | Au | 0.45 - 1.05 | 3.8 ±0.6 | 0.9 | 6.6 | 2 | | 10E4 | | |
| 1010.9752 | o | | o | | | | | | | | Ag | 0.45 - 1.05 | 6.9 ±0.6 | 0.9 | 9.7 | 5.1 | | 10E4 | | |
| 1010.9802 | o | | o | | | | | | | | Ag | 0.45 - 1.05 | 3.8 ±0.6 | 0.9 | 6.6 | 2 | | 10E4 | | |
| 1010.9852 | o | | o | | | | | | | | Ag | 0.45 - 1.05 | 6.9 ±0.6 | 0.9 | 9.7 | 5.1 | | 10E4 | | o |
| 1010.0101 | | o | | | | | | | | 6.5 long | Ag | 0.25 - 0.6 | 2.2 ±0.6 | 0.9 | 0.4 | 3.5 | | 1E6 | without approval mark | o |
| 1010.3001 | | o | | | | | | | | 6.5 long | Ag | 0.25 - 0.6 | 0.9 ±0.6 | 0.9 | 3.6 | 0.2 | | 1E6 | | |
| 1010.4402 | | o | | | | | | | | straight | Ag | 0.25 - 0.6 | 1.3 ±0.6 | 0.9 | 4.1 | 0 | | 1E6 | small base without approval mark | |
| 1010.0304 | | | o | | | | | | | 9.5 long | Ag | 0.25 - 0.6 | 2.2 ±0.6 | 0.9 | 0.4 | 3.5 | | 1E6 | | |
| 1010.2003 | | | o | | | | | | | 9.5 long | Au | 0.45 - 1.05 | 2.2 ±0.6 | 0.9 | 0.4 | 3.5 | | 1E6 | | |
| 1010.4103 | | | o | | | | | | | straight | Au | 0.25 - 0.6 | 2.2 ±0.6 | 0.9 | 0.4 | 3.5 | | 1E6 | without approval mark | o |
| 1010.6002 | | | o | | | | | | | standing | Au | 0.45 - 1.05 | 11.2 ±0.6 | 0.9 | 13.8 | 9.9 | | 1E6 | | o |
| 1010.6003 | | | o | | | | | | | standing | Ag | 0.25 - 0.6 | 11.2 ±0.6 | 0.9 | 13.8 | 9.9 | | 1E6 | | o |
| 1010.7102 | | | o | | | | | | | 6.5 long | Ag | 0.45 - 1.05 | 2.2 ±0.6 | 0.9 | 0.4 | 3.5 | | 1E6 | without approval mark | |
| 1010.7172 | | | o | | | | | | | 6.5 long | Au | 0.45 - 1.05 | 0.9 ±0.6 | 0.9 | 3.6 | 0.2 | | 1E6 | without approval mark | |
| 1010.7352 | | | o | | | | | | | 9.5 long | Ag | 0.45 - 1.05 | 0.9 ±0.6 | 0.9 | 3.6 | 0.2 | | 1E6 | | |
| 1010.8102 | | | o | | | | | | | straight | Ag | 0.45 - 1.05 | 2.2 ±0.6 | 0.9 | 0.4 | 3.5 | | 1E6 | without approval mark | |
| 1014.6151 | | | | o | o | | | | | standing | Au | 0.3 - 0.8 | 6.6 ±0.5 | 0.6 | 8.6 | 5.3 | | 50E4 | without approval mark | |
| **Changeover switch with OFF position in the center (SPDT momentary - Center OFF)** | | | | | | | | | | | | | | | | | | | | |
| 1017.0153 | | | | | | o | | | | 9.2 long | Au | | ≤ 2.1 | | 0 | 0.5 | | 1E6 | without approval mark operating range max. 4.2 | |

Basic type 1010

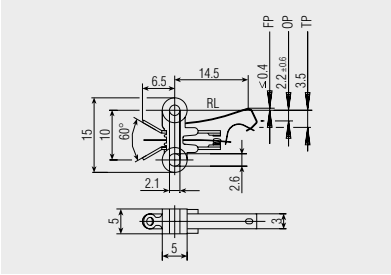


Solder terminal
30° angled

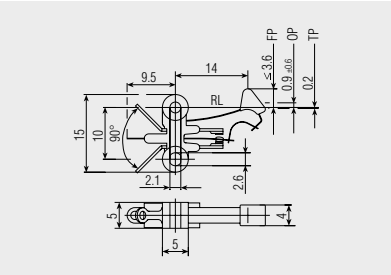


Solder terminal
45° angled

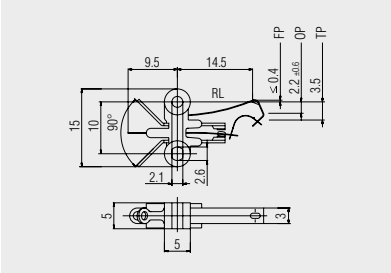


Solder terminal
45° angled

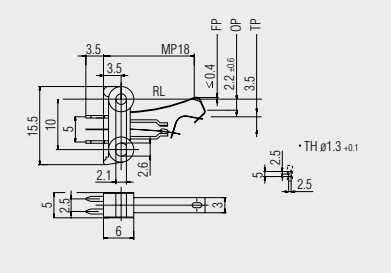


PCB terminal
straight

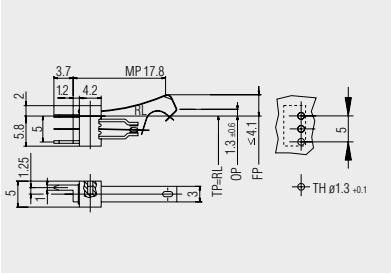


PCB terminal
straight

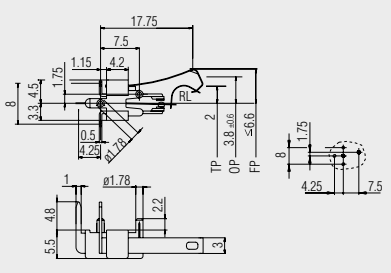


PCB terminal
left angled

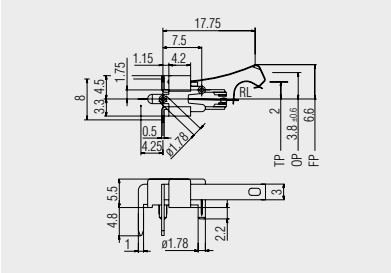


PCB terminal
right angled
1010.9802

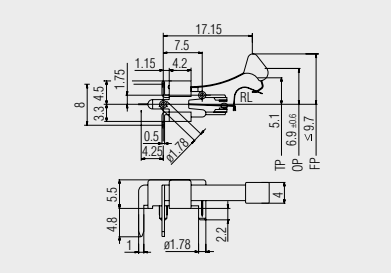


PCB terminal
right angled
1010.9852

Basic type 1010

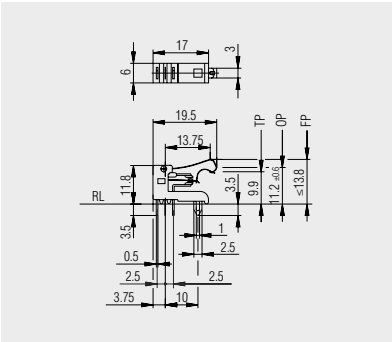


PCB terminal vertical:

A switch actuation vertical to the PCB can be implemented in a confined space with this version.

Basic type 1014

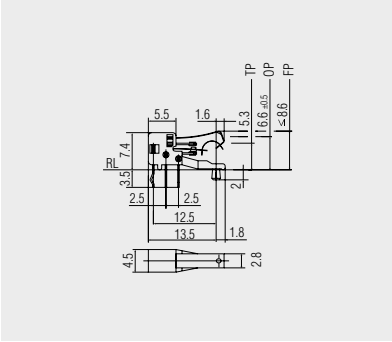


Vertical PCB terminal:

According to the same functional principle as basic type 1010, but in smaller size.

This basic type is designed for low voltages and has no approval mark.

Basic type 1017
without snap function

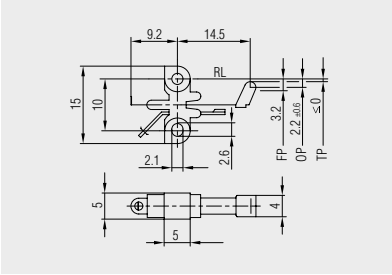


Solder terminal
normally open contact version

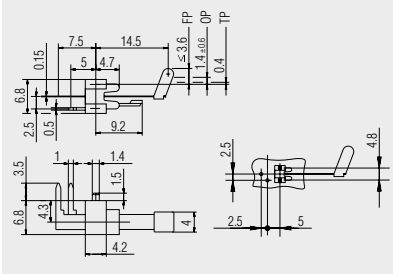


PCB terminal left angled

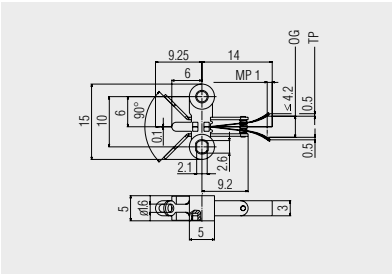


Changeover switch with OFF position
in the center

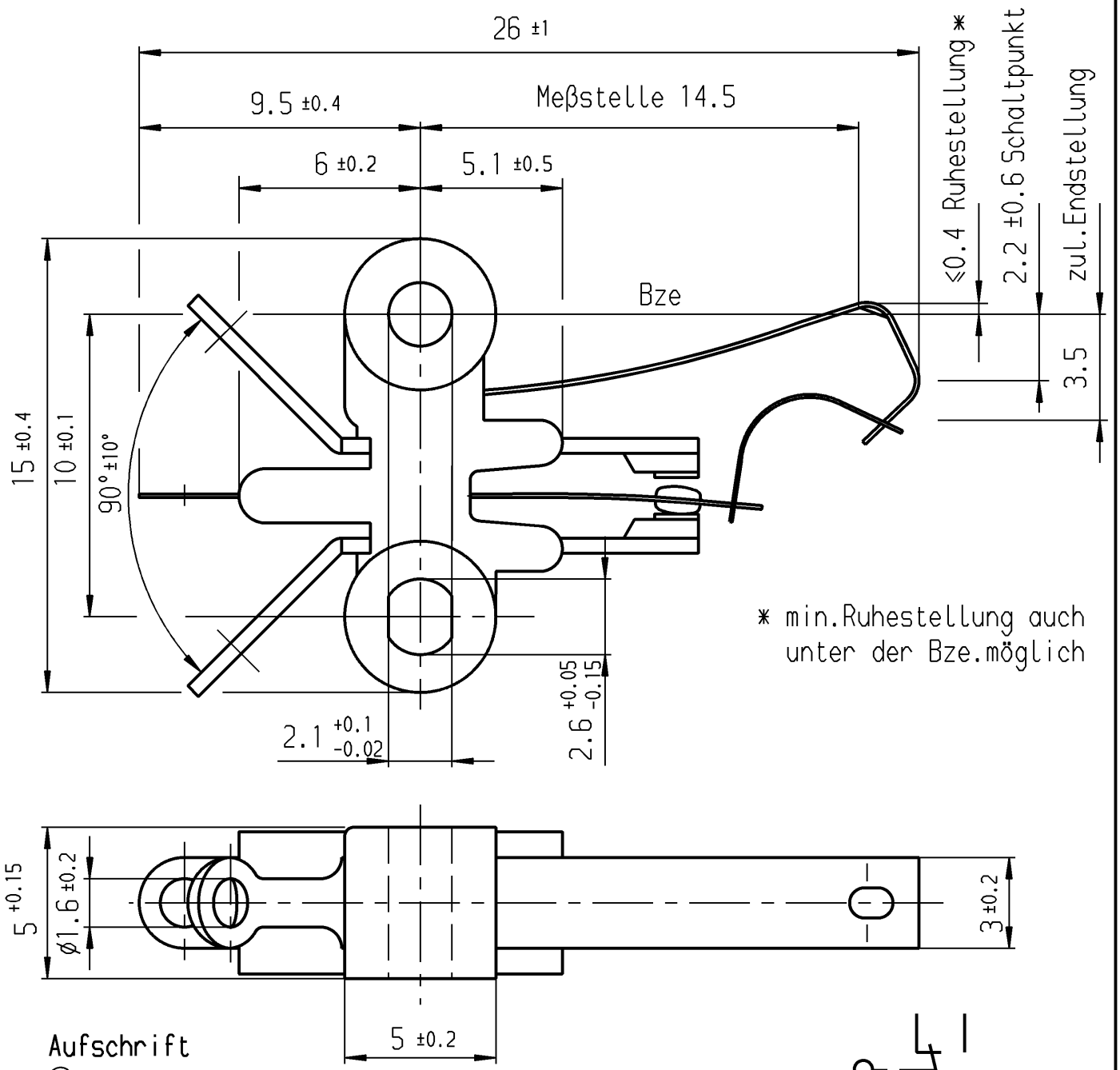


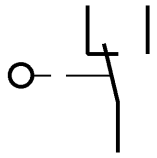

## Aufschrift

Ⓜ 1010 µ
G01

Auf Verpackung
MARQUARDT
1010.2003 µ

G01 entspricht:
2(0.5)/250~50E3 T85

10

## Wechsler 1-polig

Schalt-Betätigungskraft 0.45 bis 1.05 N
Differenzweg ≤ 0.9 mm

Kontakte vergoldet

| | | | | | | | |
|---|---|---|---|---|---|---|---|
| Für Form und Lage FOR SHAPE AND LOC. | | | Allgemeintoleranzen UNTOLERANCED DIMENSIONS | | | | |
| Für Winkel FOR ANGLE ± 2° | | | PROJECTION | Abmasse und Nennmassbereiche Angaben in mm ALL DIMENSIONS ARE IN MILLIMETRES | Laengen LENGTH | Radien RADII | |
| | | | | 0-6 | ± 0.1 | ± 0.2 | |
| | | | | >6-15 | ± 0.15 | ± 0.3 | |
| | | | | >15-30 | ± 0.2 | ± 0.5 | |
| | | | | >30-70 | ± 0.3 | ± 10% | |
| | | | | >70-120 | ± 0.4 | | |
| | | | | >120-200 | ± 0.8 | | |

| Pause COPY | Blatt SHEET | Typ | Zeichn./DRAWING NO. | Index |
|---|---|---|---|---|
| | Original DIN A4 / Maßstab SCALE 5:1 | K | 1010.2003 | b |

0 10 20 30 mm

| Ausg. ISSUE | Änderung REVISION | gez. DRAWN BY | Ausg. ISSUE | Änderung REVISION | gez. DRAWN BY |
|---|---|---|---|---|---|
| c | | | g | | |
| b | 29167 | 27.10.00 pfu | f | | |
| a | 15638 | 19.01.84 Wa | e | | |
| II | 14611 | 15.09.82 gue | d | | |

CAD Medusa | Z

gez./DRAWN BY 27.10.00 pfu
gepr./CHECKED BY

Ersatz für/REPLACEMENT OF
Z.gl.Nr.vom 15.09.82

Schnappschalter

MARQUARDT
Marquardt GmbH, D-78604 Rietheim-Weilheim

Diese Unterlage ist geistiges Eigentum der Marquardt GmbH. Schutzvermerk nach DIN 34 beachten. Copyright reserved.

RELEASED/FREIGEGEBEN 2000/Nov/28