THIS DRAWING IS UNPUBLISHED. RELEASED FOR PUBLICATION -,- .
© COPYRIGHT - BY TYCO ELECTRONICS CORPORATION. ALL RIGHTS RESERVED.

| LOC | DIST |
|---|---|
| AJ | 16 |

REVISIONS

| P | LTR | DESCRIPTION | DATE | DWN | APVD |
|---|---|---|---|---|---|
| | A | REV PER ECO 06-002539 | 06APR06 | GB | JH |

1. SEE I.S. 408-9086

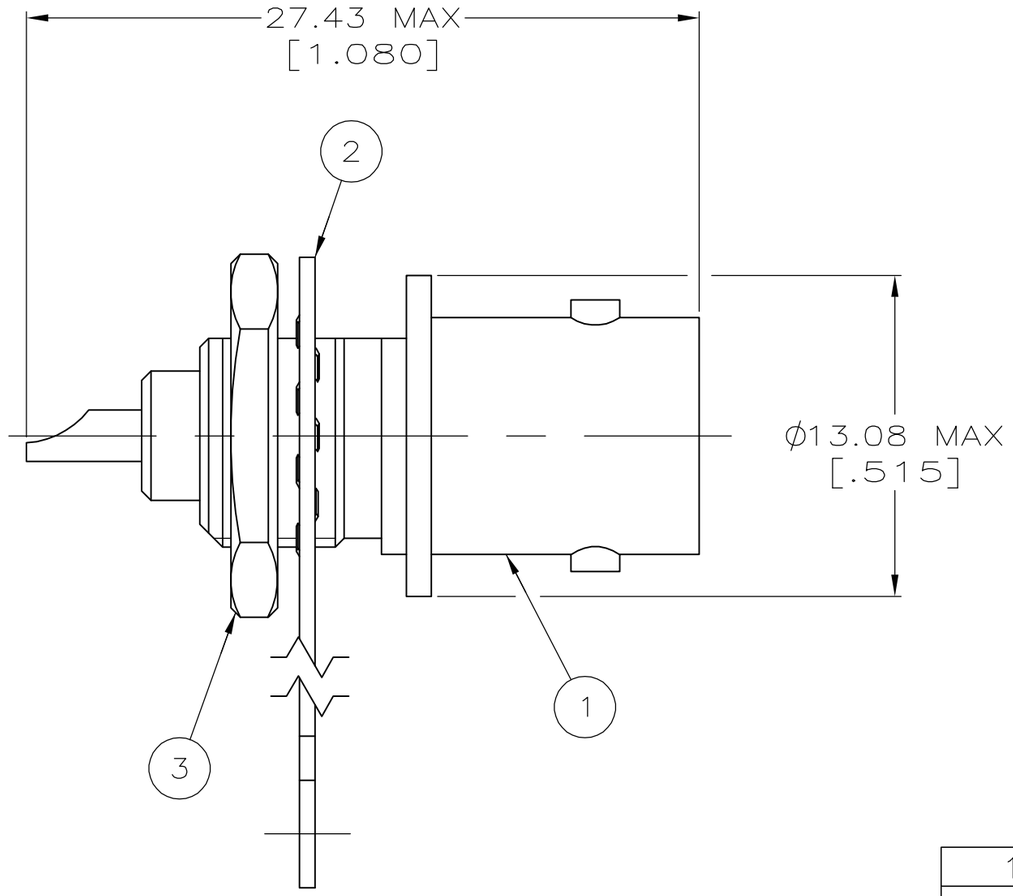


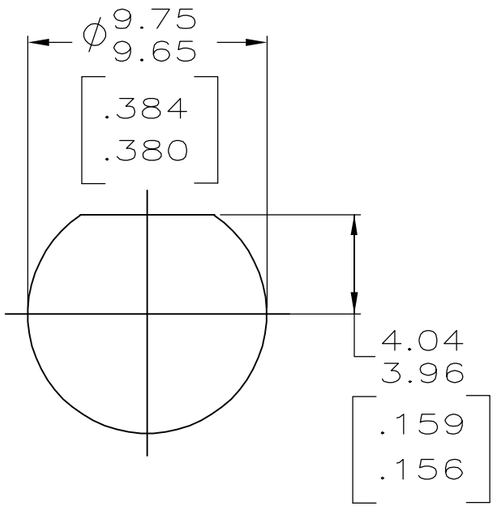


RECOMMENDED PANEL CUTOUT

| 1-330249-1 | 9-227260-0 | 221245-1 | 5221244-1 |
|---|---|---|---|
| 3 JAM NUT QTY=1 | 2 LOCKWASHER, TERMINAL QTY=1 | 1 JACK ASSY QTY=1 | PART NUMBER |

THIS DRAWING IS A CONTROLLED DOCUMENT.

DIMENSIONS: mm [INCHES]

TOLERANCES UNLESS OTHERWISE SPECIFIED:
0 PLC ± -
1 PLC ± -
2 PLC ± -
3 PLC ± -
4 PLC ± -
ANGLES ± -

MATERIAL -

FINISH -

DWN J. ALCORTA - DOCK5 21APR2005
CHK J. HAVENER 21APR2005
APVD J. LIPPERT 21APR2005
PRODUCT SPEC 108-12079
APPLICATION SPEC -
WEIGHT -

tyco Electronics
Tyco Electronics Corporation
Harrisburg, PA 17105-3608

NAME
SOLDER JACK
75 OHM, SERIES BNC
-

| SIZE | CAGE CODE | DRAWING NO | RESTRICTED TO |
|---|---|---|---|
| A3 | 00779 | C-5221244 | - |

CUSTOMER DRAWING

| SCALE | SHEET | REV |
|---|---|---|
| 4:1 | 1 OF 1 | A |