L79L

Negative voltage regulators

Datasheet - production data

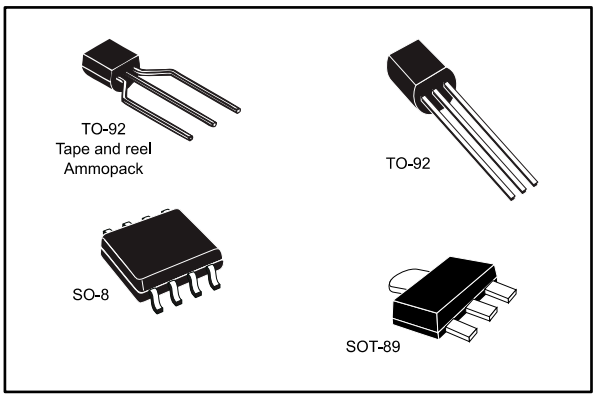

Features

- Output current up to 100 mA
- Output voltages of -5; -8;-12; -15 V
- Thermal overload protection
- Short-circuit protection
- No external components are required
- Output tolerance + 4%

Description

The L79L series of three-terminal negative regulators employ internal current limiting and thermal shutdown, making them essentially indestructible. If adequate heat-sink is provided, they can deliver up to 100 mA output current. They are intended as fixed voltage regulators in a wide range of applications including local or on-card regulation for elimination of noise and distribution problems associated with single-point regulation. In addition, they can be used with power pass elements to make high-current voltage regulators. The L79L series used as Zener diode/resistor combination replacement, offers an effective output impedance improvement of typically two orders of magnitude, along with lower quiescent current and lower noise.

This is information on a product in full production. www.st.com

Contents

1 Diagram 3

2 Pin configuration 4

3 Maximum ratings 5

4 Electrical characteristics 6

5 Package information 9

5.1 TO-92 package information 9

5.2 TO-92 packing information 10

5.3 TO-92 Ammopak packing information 12

5.4 SO-8 package information 14

5.5 SO-8 packing information 16

5.6 SOT-89 package information 17

5.7 SOT-89 packing information 20

6 Ordering information 21

7 Revision history 22

1 Diagram

Figure 1: Schematic diagram

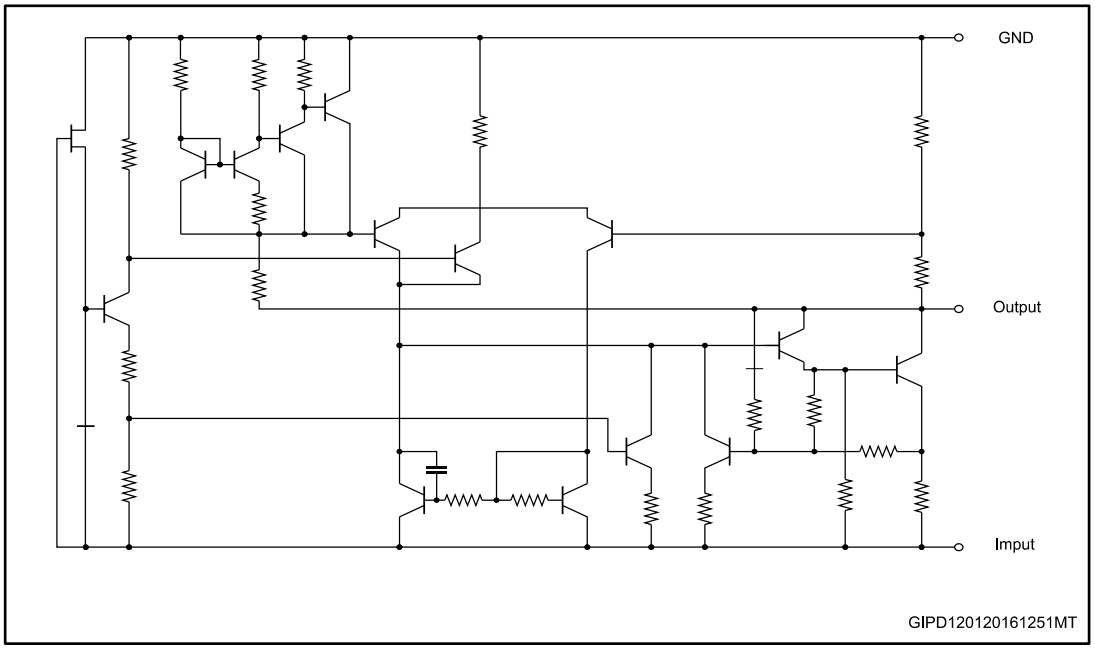

2 Pin configuration

Figure 2: Pin connection (top view, bottom view for TO-92)

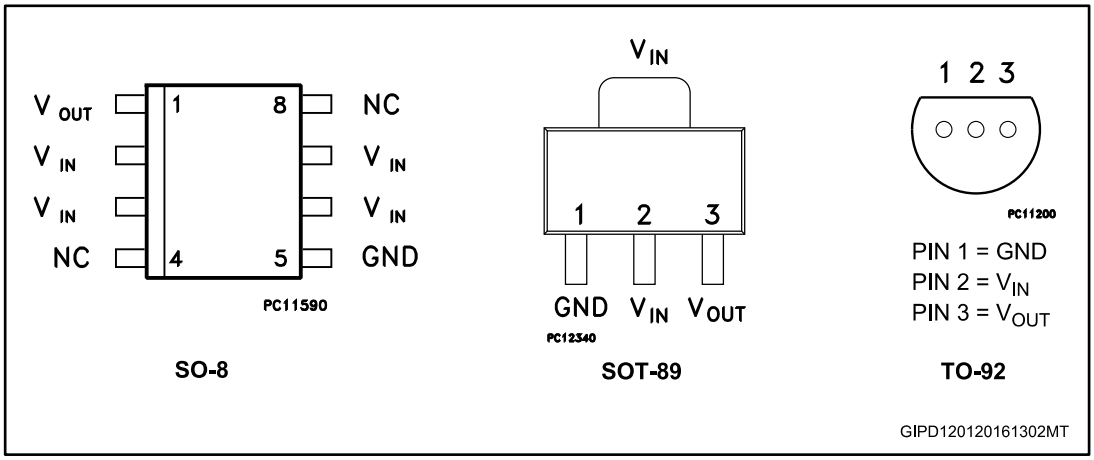

Figure 3: Test circuit

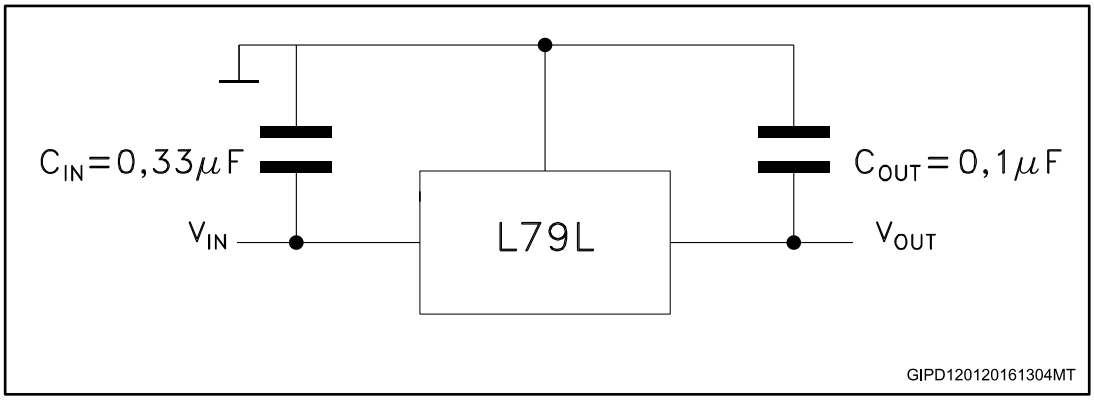

3 Maximum ratings

Table 1: Absolute maximum ratings

Symbol	Parameter	Value		Unit
V_I	DC input voltage	V_O = -5 to -9 V	-30	V
		V_O = -12 to -15 V	-35	
I_O	Output current		100	mA
P_D	Power dissipation		Internally limited (1)	mW
T_{STG}	Storage temperature range		-40 to 150	°C
T_{OP}	Operating junction temperature range	For L79LXXAC	0 to 125	°C
		For L79LXXAB	-40 to 125	

Notes:

(1) Our SO-8 package used for Voltage Regulators is modified internally to have pins 2, 3, 6 and 7 electrically communed to the die attach flag. This particular frame decreases the total thermal resistance of the package and increases its ability to dissipate power when an appropriate area of copper on the printed circuit board is available for heat-sinking. The external dimensions are the same as for the standard SO-8.

Table 2: Thermal data

Symbol	Parameter	SO-8	TO-92	SOT-89	Unit
R_{thJC}	Thermal resistance junction-case (max.)	20		15	°C/W
R_{thJA}	Thermal resistance junction-ambient (max.)	55 (1)	200	115	°C/W

Notes:

(1) Considering 6 cm^2 of copper Board heat-sink.

4 Electrical characteristics

Refer to the test circuits, V_I = - 10 V, I_O = 40 mA, C_I = 0.33 µF, C_O = 0.1 µF, T_J = 0 to 125 °C for L79L05AC, T_J = -40 to 125 °C for L79L05AB, unless otherwise specified.

Table 3: Electrical characteristics of L79L05AC and L79L05AB

Symbol	Parameter	Test conditions	Min.	Typ.	Max.	Unit
V_O	Output voltage	T_J = 25 °C	-4.8	-5	-5.2	V
V_O	Output voltage	I_O = 1 to 40 mA, V_I = -7 to -20 V	-4.75		-5.25	V
		I_O = 1 to 70 mA, V_I = -10 V	-4.75		-5.25	
ΔV_O	Line regulation	V_I = -7 to -20 V, T_J = 25 °C			150	mV
		V_I = -8 to -20 V, T_J = 25 °C			100	
ΔV_O	Load regulation	I_O = 1 to 100 mA, T_J = 25 °C			60	mV
		I_O = 1 to 40 mA, T_J = 25 °C			30	
I_d	Quiescent current	T_J = 25 °C			6	mA
		T_J = 125 °C			5.5	mA
ΔI_d	Quiescent current change	I_O = 1 to 40 mA			0.1	mA
		V_I = -8 to -20 V			1.5	
eN	Output noise voltage	B = 10 Hz to 100 kHz, T_J = 25 °C		40		µV
SVR	Supply voltage rejection	V_I = -8 to -18 V, f = 120 Hz I_O = 40 mA, T_J = 25 °C	41	49		dB
V_d	Dropout voltage			1.7		V

Refer to the test circuits, V_I = - 14 V, I_O = 40 mA, C_I = 0.33 µF, C_O = 0.1 µF, T_J = 0 to 125 °C for L79L08AC T_J = -40 to 125 °C for L79L08AB, unless otherwise specified.

Table 4: Electrical characteristics of L79L08AC and L79L08AB

Symbol	Parameter	Test conditions	Min.	Typ.	Max.	Unit
V_O	Output voltage	T_J = 25 °C	-7.68	-8	-8.32	V
V_O	Output voltage	I_O = 1 to 40 mA, V_I = -10.5 to -23 V	-7.6		-8.4	V
		I_O = 1 to 70 mA, V_I = -14 V	-7.6		-8.4	
ΔV_O	Line regulation	V_I = -10.5 to -23 V, T_J = 25 °C			175	mV
		V_I = -11 to -23 V, T_J = 25 °C			125	
ΔV_O	Load regulation	I_O = 1 to 100 mA, T_J = 25 °C			80	mV
		I_O = 1 to 40 mA, T_J = 25 °C			40	
I_d	Quiescent current	T_J = 25 °C			6	mA
		T_J = 125 °C			5.5	mA
ΔI_d	Quiescent current change	I_O = 1 to 40 mA			0.1	mA
		V_I = -11 to -23 V			1.5	
eN	Output noise voltage	B = 10 Hz to 100 kHz, T_J = 25 °C		60		µV

Symbol	Parameter	Test conditions	Min.	Typ.	Max.	Unit
SVR	Supply voltage rejection	V_I = -12 to -23 V, f = 120 Hz, I_O = 40 mA, T_J = 25 °C	37	45		dB
V_d	Dropout voltage			1.7		V

Refer to the test circuits, V_I = - 19 V, I_O = 40 mA, C_I = 0.33 µF, C_O = 0.1 µF, T_J = 0 to 125 °C for L79L12AC, T_J = -40 to 125 °C for L79L12AB, unless otherwise specified.

Table 5: Electrical characteristics of L79L12AC and L79L12AB

Symbol	Parameter	Test conditions	Min.	Typ.	Max.	Unit
V_O	Output voltage	T_J = 25°C	-11.5	-12	-12.5	V
V_O	Output voltage	I_O = 1 to 40 mA, V_I = -14.5 to -27 V	-11.4		-12.6	V
		I_O = 1 to 70 mA, V_I = -19 V	-11.4		-12.6	
ΔV_O	Line regulation	V_I = -14.5 to -27 V, T_J = 25 °C			250	mV
		V_I = -16 to -27 V, T_J = 25 °C			200	
ΔV_O	Load regulation	I_O = 1 to 100 mA, T_J = 25 °C			100	mV
		I_O = 1 to 40 mA, T_J = 25 °C			50	
I_d	Quiescent current	T_J = 25 °C			6.5	mA
		T_J = 125 °C			6	mA
ΔI_d	Quiescent current change	I_O = 1 to 40 mA			0.1	mA
		V_I = -16 to -27 V			1.5	
eN	Output noise voltage	B = 10 Hz to 100 kHz, T_J = 25 °C		80		µV
SVR	Supply voltage rejection	V_I = -15 to -25 V, f = 120 Hz I_O = 40 mA, T_J = 25 °C	37	42		dB
V_d	Dropout voltage			1.7		V

Refer to the test circuits, V_I = - 23 V, I_O = 40 mA, C_I = 0.33 µF, C_O = 0.1 µF, T_J = 0 to 125 °C for L79L15AC, T_J = -40 to 125 °C for L79L15AB, unless otherwise specified.

Table 6: Electrical characteristics of L79L15AC and L79L15AB

Symbol	Parameter	Test conditions	Min.	Typ.	Max.	Unit
V_O	Output voltage	T_J = 25°C	-14.4	-15	-15.6	V
V_O	Output voltage	I_O = 1 to 40 mA, V_I = -17.5 to -30 V	-14.25		-15.75	V
		I_O = 1 to 70 mA, V_I = -23 V	-14.25		-15.75	
ΔV_O	Line regulation	V_I = -17.5 to -30 V, T_J = 25 °C			300	mV
		V_I = -20 to -30 V, T_J = 25 °C			250	
ΔV_O	Load regulation	I_O = 1 to 100 mA, T_J = 25 °C			150	mV
		I_O = 1 to 40 mA, T_J = 25 °C			75	
I_d	Quiescent current	T_J = 25 °C			6.5	mA
		T_J = 125 °C			6	mA
ΔI_d	Quiescent current change	I_O = 1 to 40 mA			0.1	mA
		V_I = -20 to -30 V			1.5	

Symbol	Parameter	Test conditions	Min.	Typ.	Max.	Unit
eN	Output noise voltage	B = 10 Hz to 100 kHz, T_J = 25 °C		90		µV
SVR	Supply voltage rejection	V_I = -18.5 to -28.5.V, f = 120 Hz I_O = 40 mA, T_J = 25 °C	34	39		dB
V_d	Dropout voltage			1.7		V

5 Package information

In order to meet environmental requirements, ST offers these devices in different grades of ECOPACK® packages, depending on their level of environmental compliance. ECOPACK® specifications, grade definitions and product status are available at: ***www.st.com***. ECOPACK® is an ST trademark.

5.1 TO-92 package information

Figure 4: TO-92 package outline

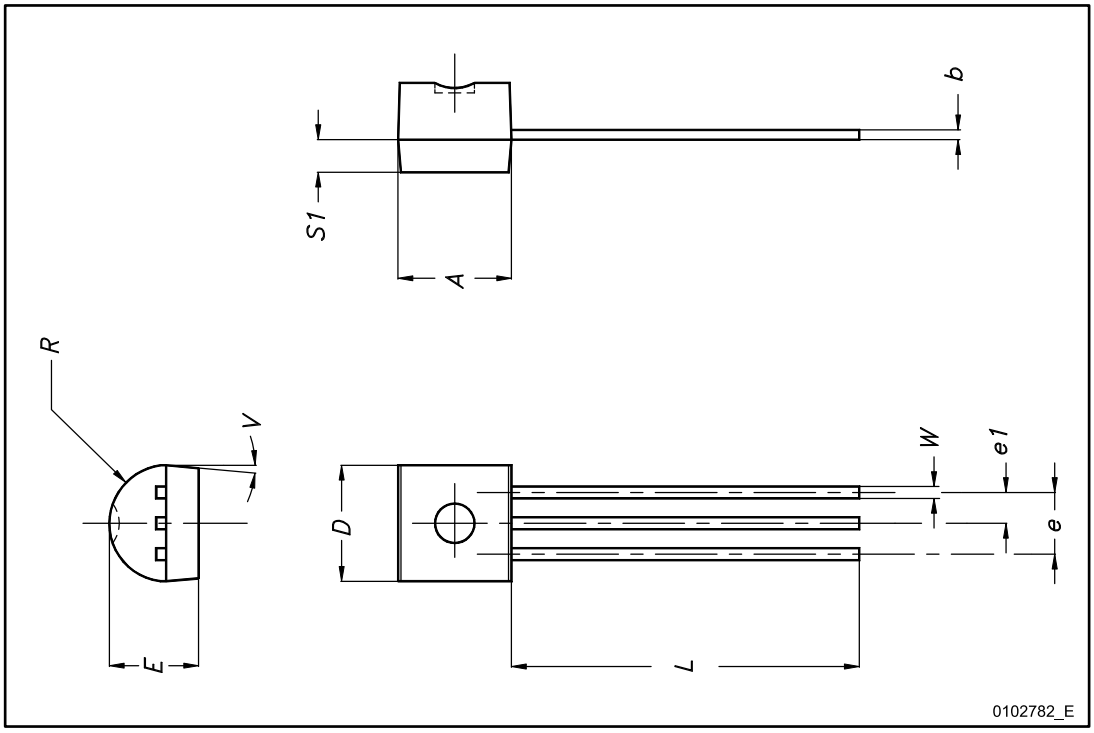

Table 7: TO-92 mechanical data

Dim.	mm		
	Min.	Typ.	Max.
A	4.32		4.95
b	0.36		0.51
D	4.45		4.95
E	3.30		3.94
e	2.41		2.67
e1	1.14		1.40
L	12.70		15.49
R	2.16		2.41
S1	0.92		1.52
W	0.41		0.56
V		5°	

5.2 TO-92 packing information

Figure 5: TO-92 tape and reel outline

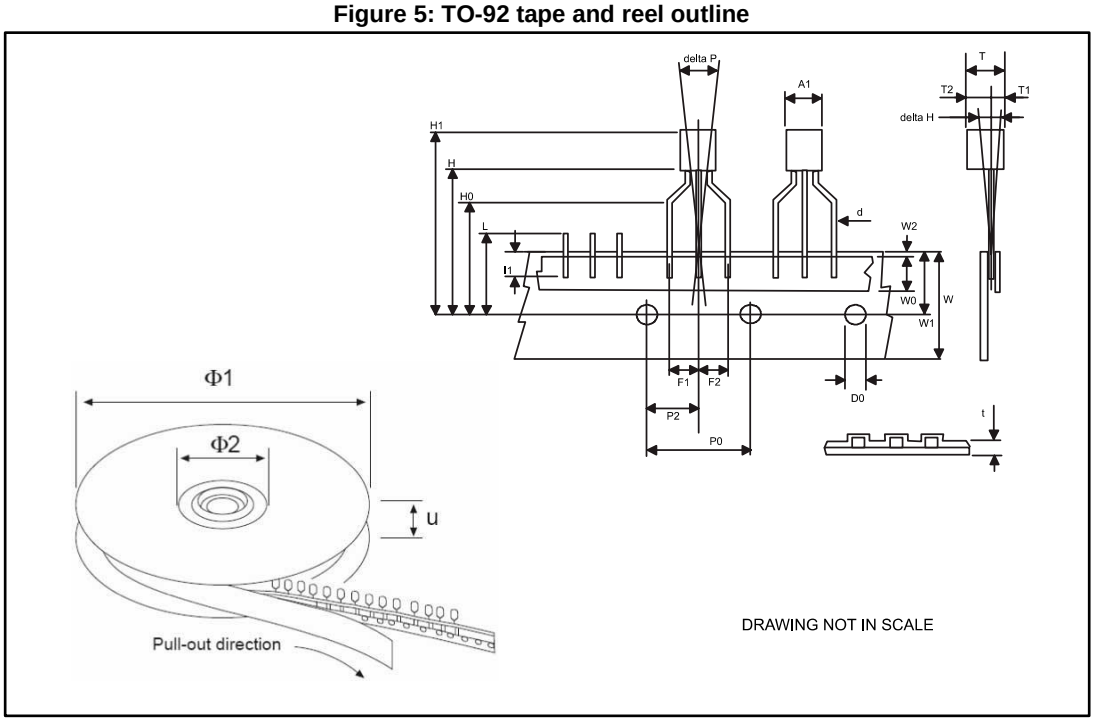

Table 8: TO-92 tape and reel mechanical data

Dim.	mm		
	Min.	Typ.	Max.
A1			4.80
T			3.80
T1			1.60
T2			2.30
d	0.45	0.47	0.48
P0	12.50	12.70	12.90
P2	5.65	6.35	7.05
F1, F2	2.40	2.50	2.94
F3	4.98	5.08	5.48
delta H	-2.00		2.00
W	17.50	18.00	19.00
W0	5.5	6.00	6.5
W1	8.50	9.00	9.25
W2			0.50
H		18.50	21
H3	0.5	1	2
H0	15.50	16.00	18.8
H1		25.0	27.0
D0	3.80	4.00	4.20
t			0.90
L			11.00
I1	3.00		
delta P	-1.00		1.00
Ø1	352	355	358
Ø2	28	30	32
u	44	47	50

5.3 TO-92 Ammopak packing information

Figure 6: TO-92 Ammopak tape and reel outline

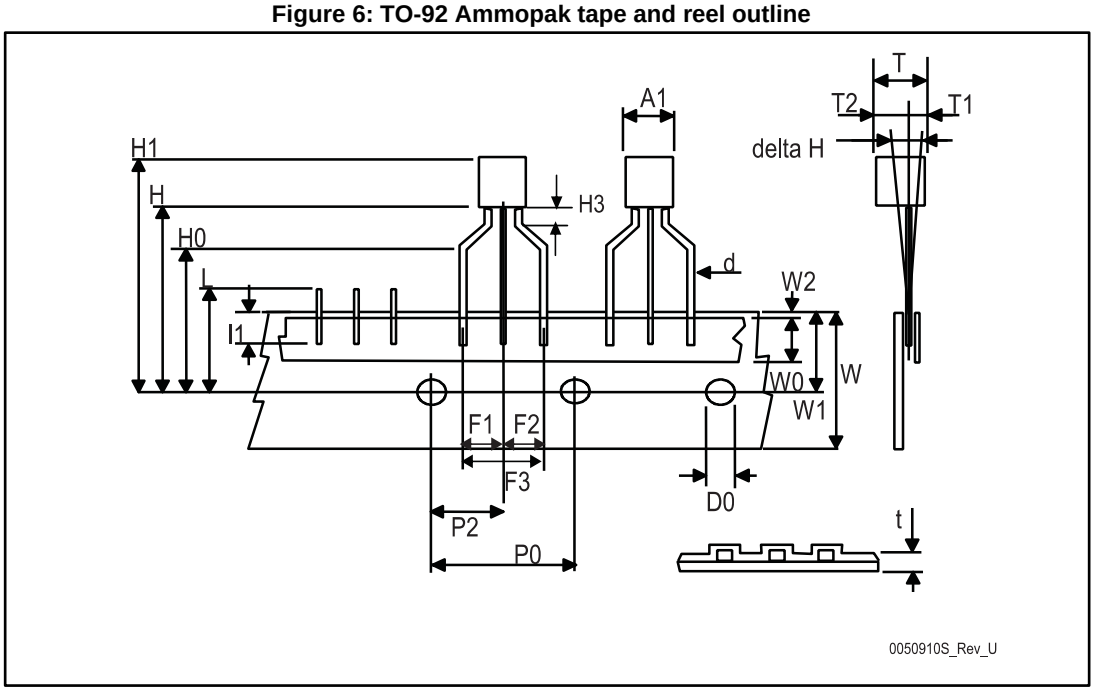

Table 9: TO-92 Ammopak tape and reel mechanical data

Dim.	mm		
	Min.	Typ.	Max.
A1			4.80
T			3.80
T1			1.60
T2			2.30
d	0.45	0.47	0.48
P0	12.50	12.70	12.90
P2	5.65	6.35	7.05
F1, F2	2.40	2.50	2.94
F3	4.98	5.08	5.48
delta H	-2.00		2.00
W	17.50	18.00	19.00
W0	5.5	6.00	6.5
W1	8.50	9.00	9.25
W2			0.50
H		18.50	21
H3	0.5	1	2
H0	15.50	16.00	18.8
H1		25.0	27.0
D0	3.80	4.00	4.20
t			0.90
L			11.00
I1	3.00		
delta P	-1.00		1.00

5.4 SO-8 package information

Figure 7: SO-8 package outline

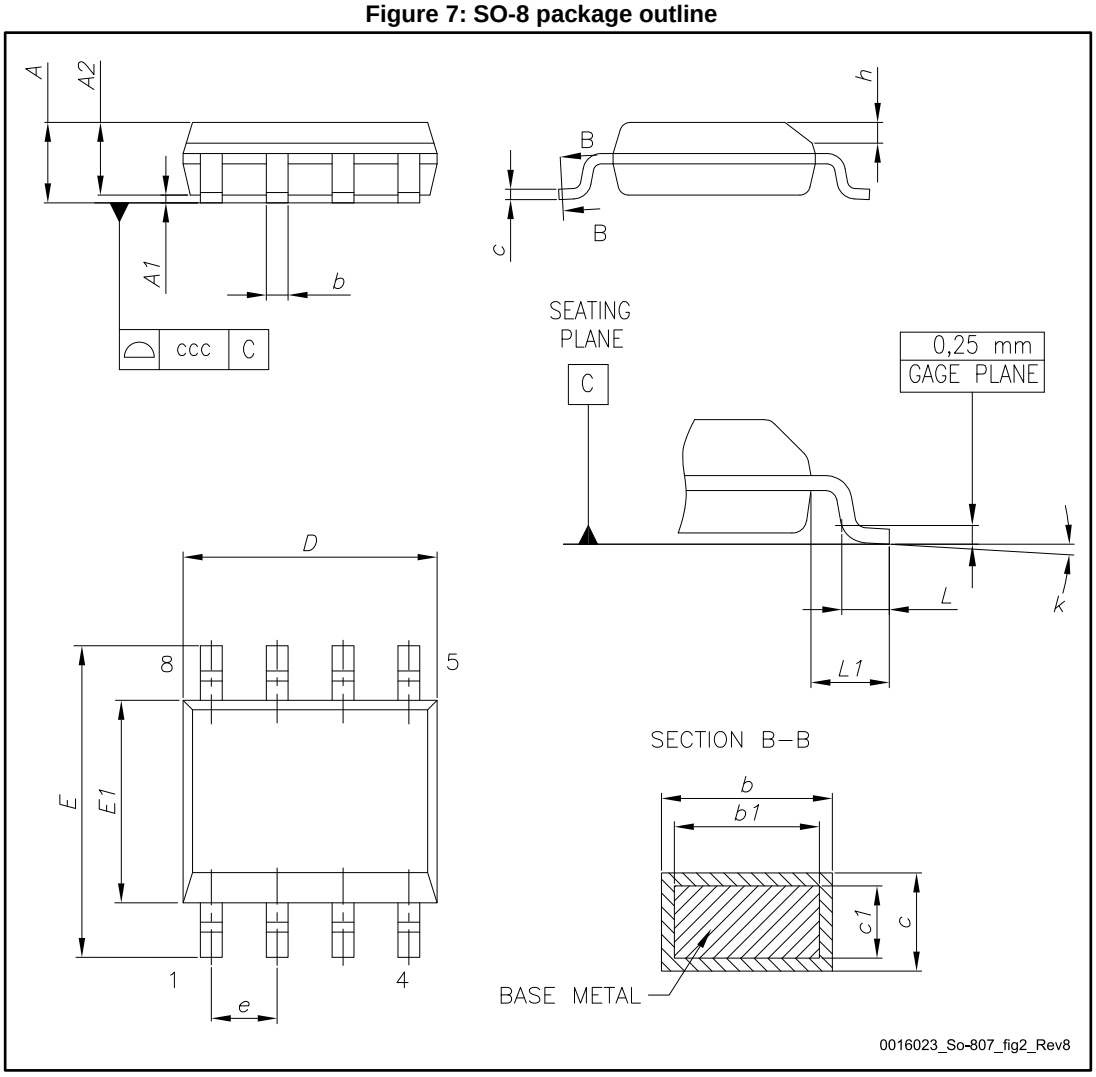

Table 10: SO-8 mechanical data

Dim.	mm		
	Min.	Typ.	Max.
A			1.75
A1	0.10		0.25
A2	1.25		
b	0.31		0.51
b1	0.28		0.48
c	0.10		0.25
c1	0.10		0.23
D	4.80	4.90	5.00
E	5.80	6.00	6.20
E1	3.80	3.90	4.00
e		1.27	
h	0.25		0.50
L	0.40		1.27
L1		1.04	
L2		0.25	
k	0°		8°
ccc			0.10

Figure 8: SO-8 recommended footprint (dimensions are in mm)

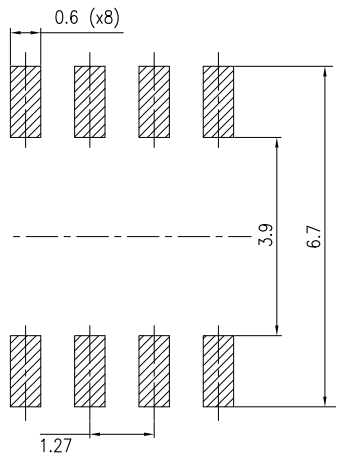

0016023_So-807_footprint_Rev8.svg

5.5 SO-8 packing information

Figure 9: SO-8 tape and reel dimensions

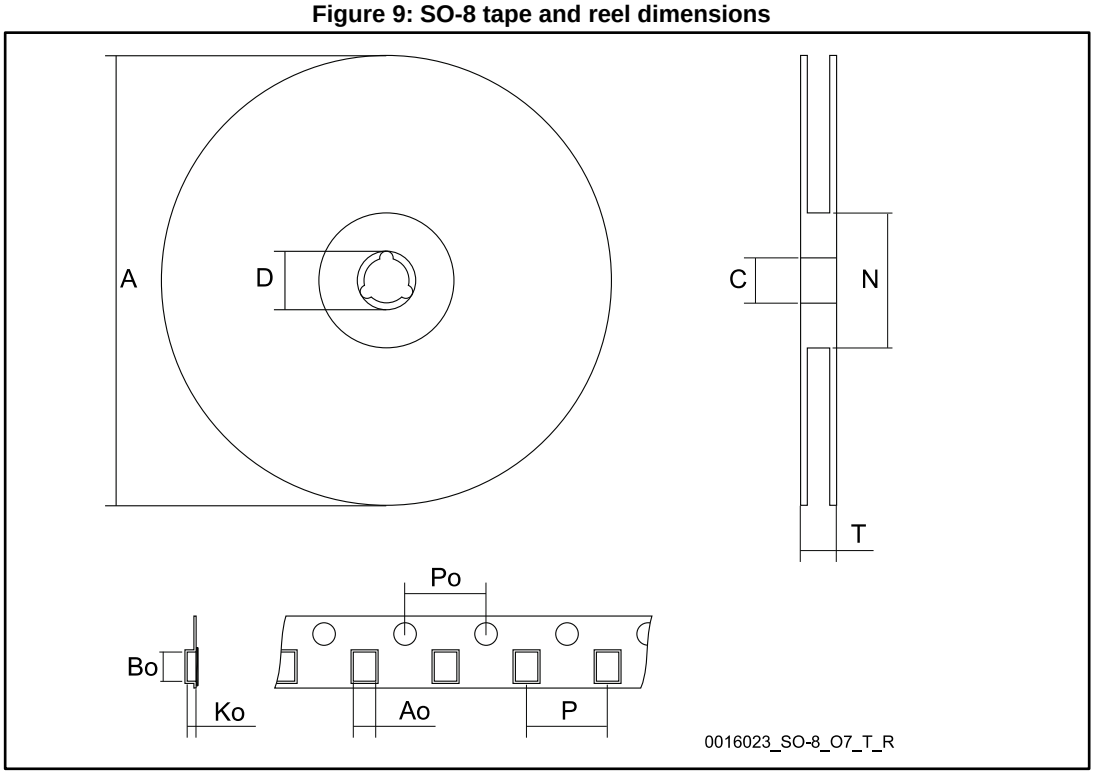

Table 11: SO-8 tape and reel mechanical data

Dim.	mm		
	Min.	Typ.	Max.
A		-	330
C	12.8		13.2
D	20.2		
N	60		
T			22.4
Ao	8.1		8.5
Bo	5.5		5.9
Ko	2.1		2.3
Po	3.9		4.1
P	7.9		8.1

5.6 SOT-89 package information

Figure 10: SOT-89 package outline

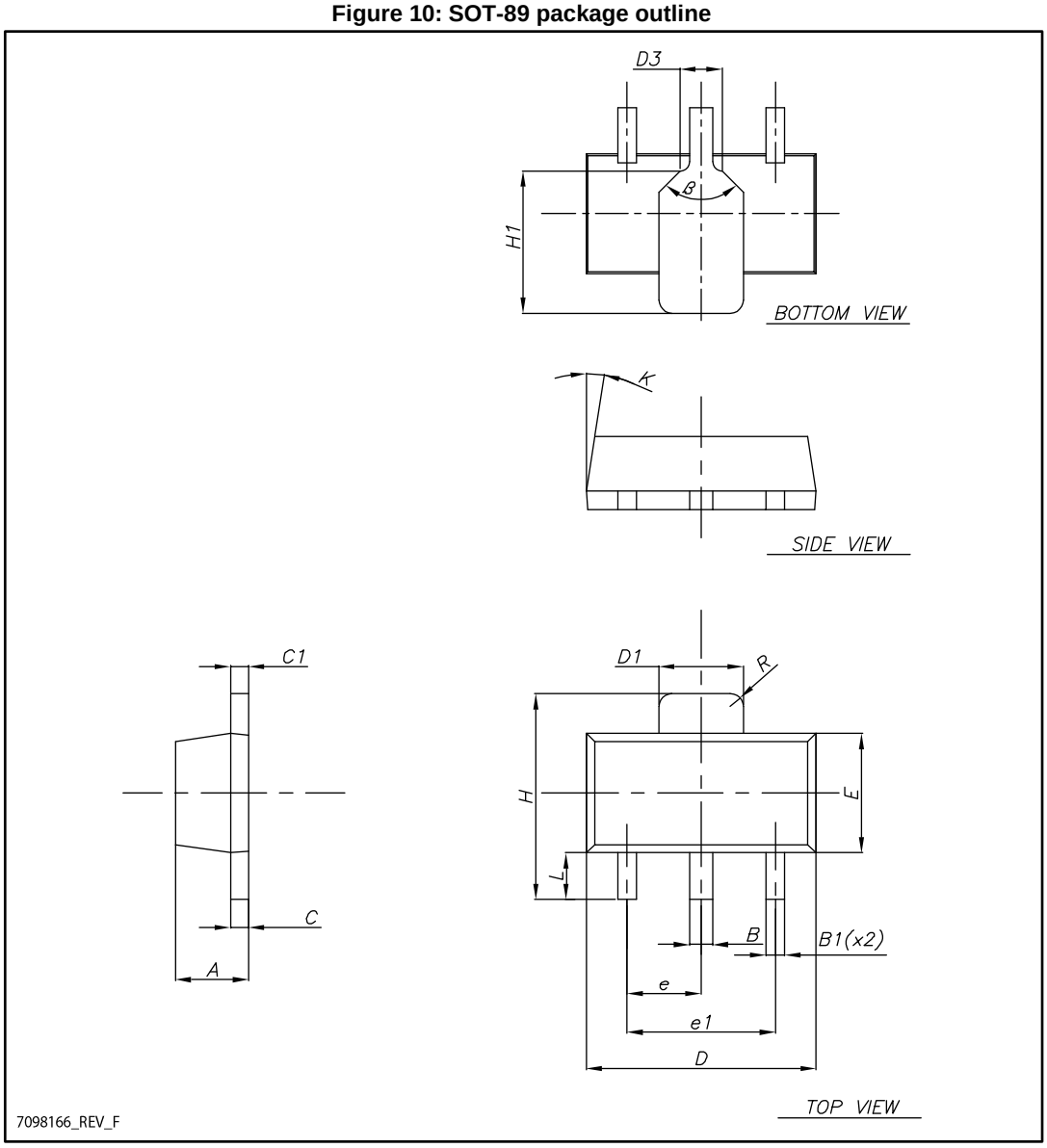

Table 12: SOT-89 mechanical data

Dim.	mm		
	Min.	Typ.	Max.
A	1.40		1.60
B	0.44		0.56
B1	0.36		0.48
C	0.35		0.44
C1	0.35		0.44
D	4.40		4.60
D1	1.62		1.83
D3		0.90	
E	2.29		2.60
e	1.42		1.57
e1	2.92		3.07
H	3.94		4.25
H1	2.70		3.10
K	1°		8°
L	0.89		120
R		0.25	
β		90°	

Figure 11: SOT-89 recommended footprint

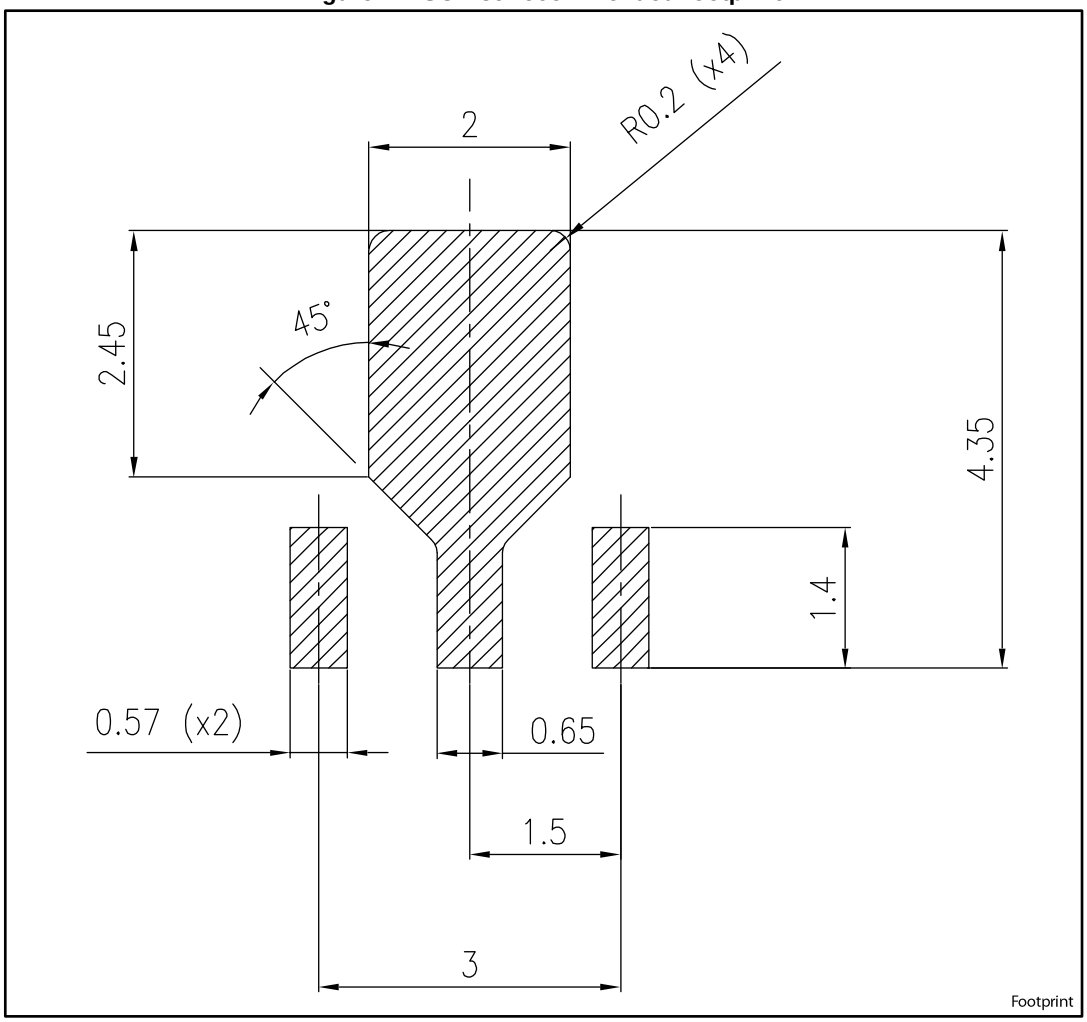

5.7 SOT-89 packing information

Figure 12: SOT-89 carrier tape outline

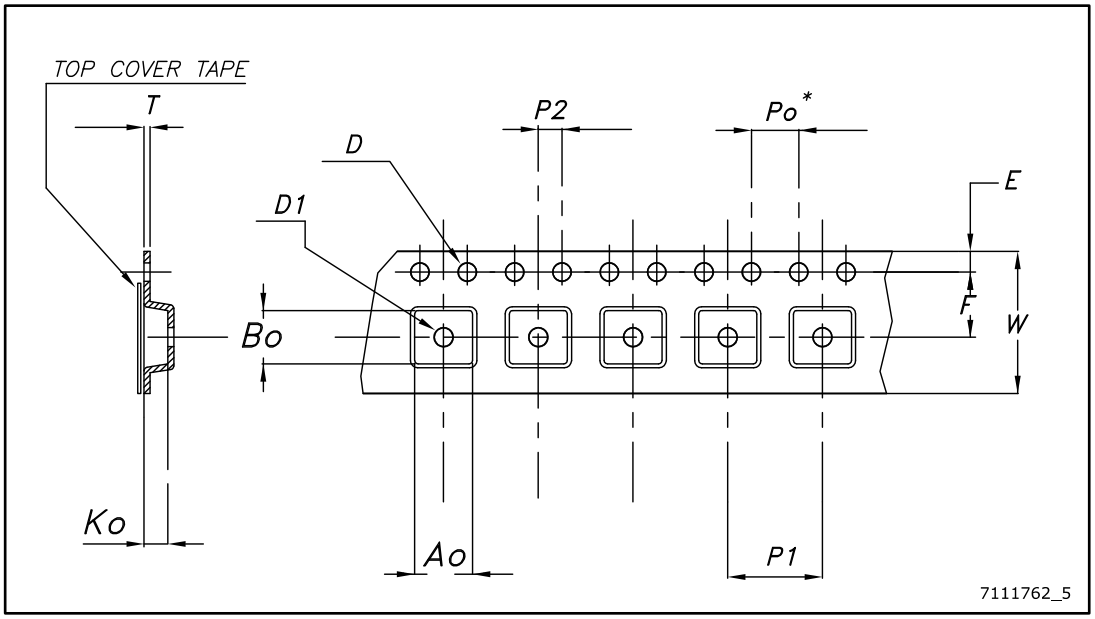

Table 13: SOT-89 carrier tape mechanical data

Dim.	mm	
	Value	Tolerance
Ao	4.91	± 0.10
Bo	4.52	± 0.10
Ko	1.90	± 0.10
F	5.50	± 0.10
E	1.75	± 0.10
W	12	± 0.30
P2	2	± 0.10
Po	4	± 0.10
P1	8	± 0.10
T	0.30	± 0.10
D	Ø 1.55	± 0.05
D1	Ø 1.60	± 0.10

6 Ordering information

Table 14: Ordering information

SO-8	TO-92 (bag)	TO-92 (Ammopak)	TO-92 (tape and reel)	SOT-89	Output voltage (V)
L79L05ABD13TR	L79L05ACZ	L79L05ABZ-AP		L79L05ABUTR	-5
L79L05ACD13TR		L79L08ACZ-AP	L79L05ACZ-TR	L79L05ACUTR	-5
L79L08ACD13TR					-8
L79L12ACD13TR			L79L12ACZ-TR	L79L12ACUTR	-12
L79L15ABD13TR					-15
L79L15ACD13TR				L79L15ACUTR	-15

7 Revision history

Table 15: Document revision history

Date	Revision	Changes
14-Mar-2005	9	Add Tape and Reel for TO-92.
15-Mar-2005	10	Add note on Table 3.
23-Dec-2005	11	Mistake on ordering Table in Header.
12-Sep-2006	12	Order codes updated.
25-Jul-2007	13	Pin connection for SOT-89 updated on Figure 2.
04-Dec-2007	14	Modified: Table 14.
14-Jul-2008	15	Modified: Table 14 on page 24.
29-Jul-2009	16	Modified: Table 14 on page 24.
17-Apr-2014	17	Part numbers L79LxxAB, L78LxxAC, L78LxxC changed to L79L. Removed Table 1: Device summary. Updated the features and description in cover page. Updated Figure 1: Schematic diagram, Table 1: Absolute maximum ratings and Table 14: Order codes. Added Section 5: Packaging mechanical data. Minor text changes.
12-Feb-2016	18	Updated Section 5: Package information. Minor text changes.
06-Dec-2017	19	Updated features in cover page.

IMPORTANT NOTICE – PLEASE READ CAREFULLY

STMicroelectronics NV and its subsidiaries ("ST") reserve the right to make changes, corrections, enhancements, modifications, and improvements to ST products and/or to this document at any time without notice. Purchasers should obtain the latest relevant information on ST products before placing orders. ST products are sold pursuant to ST's terms and conditions of sale in place at the time of order acknowledgement.

Purchasers are solely responsible for the choice, selection, and use of ST products and ST assumes no liability for application assistance or the design of Purchasers' products.

No license, express or implied, to any intellectual property right is granted by ST herein.

Resale of ST products with provisions different from the information set forth herein shall void any warranty granted by ST for such product.

ST and the ST logo are trademarks of ST. All other product or service names are the property of their respective owners.

Information in this document supersedes and replaces information previously supplied in any prior versions of this document.

© 2017 STMicroelectronics – All rights reserved