REVISIONS				
LTR	DESCRIPTION	E.C.N.	DATE	BY/APP'D
C	NSC version of drawing MTC16			
4	REDRAW AS FSC DRWG	ECN-MTC16REV4	AUG 2006	H.ALLEN

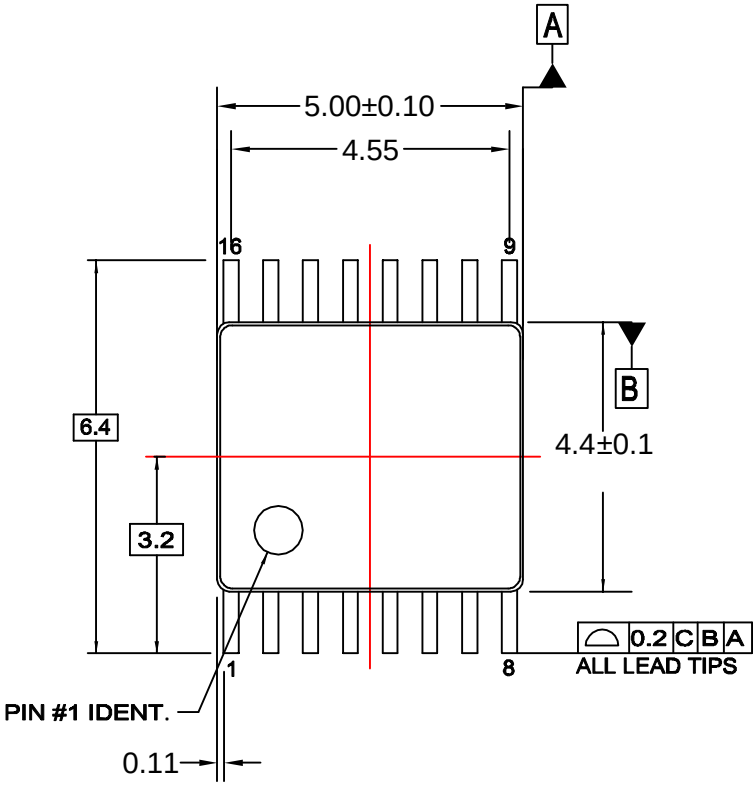

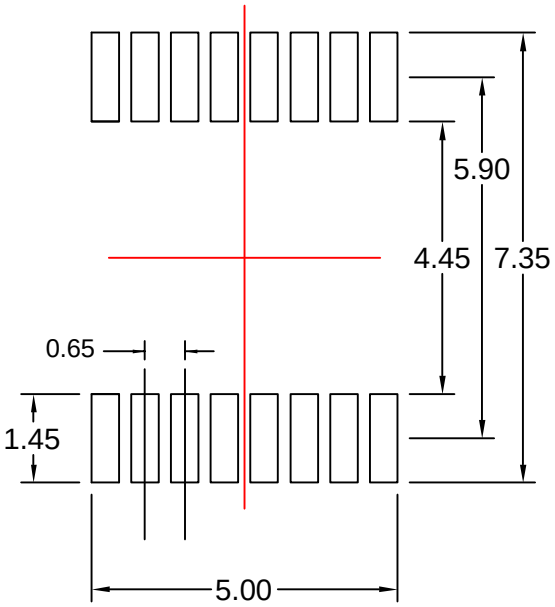

LAND PATTERN RECOMMENDATION (F)

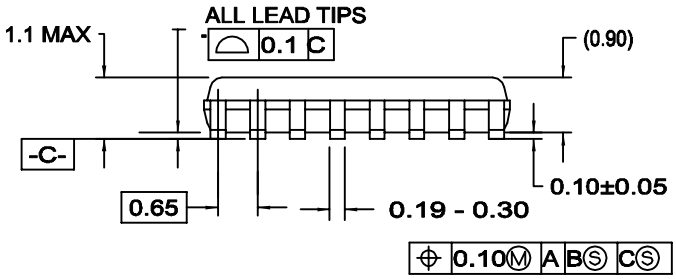

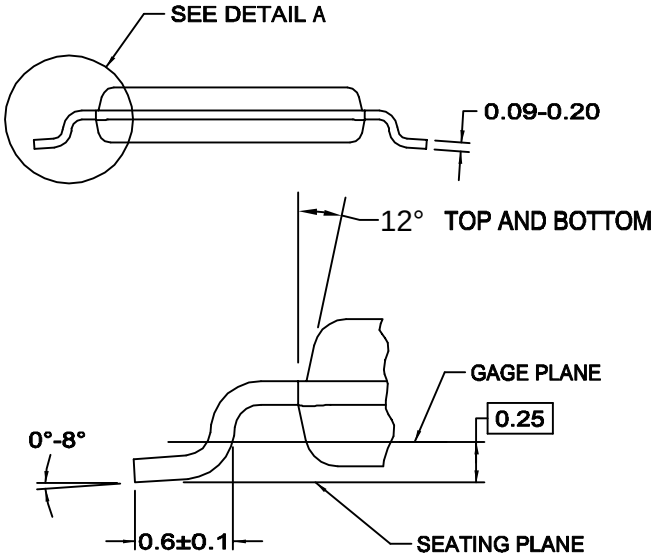

DETAIL A

NOTES:

A. CONFORMS TO JEDEC REGISTRATION MO-153, VARIATION AB.
B. DIMENSIONS ARE IN MILLIMETERS
C. DIMENSIONS ARE EXCLUSIVE OF BURRS, MOLD FLASH, AND TIE BAR EXTRUSIONS
D. DIMENSIONING AND TOLERANCES PER ANSI Y14.5M, 1994
E. DRAWING FILE NAME: MTC16REV4
F. LAND PATTERN RECOMMENDATION PER IPC7351 - ID# TSOP65P640X110-16N

MTC16rev4

APPROVALS	DATE	FAIRCHILD SEMICONDUCTOR™ Bayan Lepas, FIZ, 11900, Penang, Malaysia.
DRAWN FEITAN	10-07-04	
DFTG. CHK. H.ALLEN	24-08-06	16LD, TSSOP, JEDEC MO-153, 4.4MM WIDE
ENGR. CHK.		
PROJECTION INCH [MM]		SCALE N/A · SIZE C · DRAWING NUMBER MKT-MTC16 · REV 4
		DO NOT SCALE DRAWING · SHEET 1 of 1